Technical Manuals Online! - http://www.tech-man.com

SIEMENS

# Cerberus Division

Version 1.0

## Table of Contents

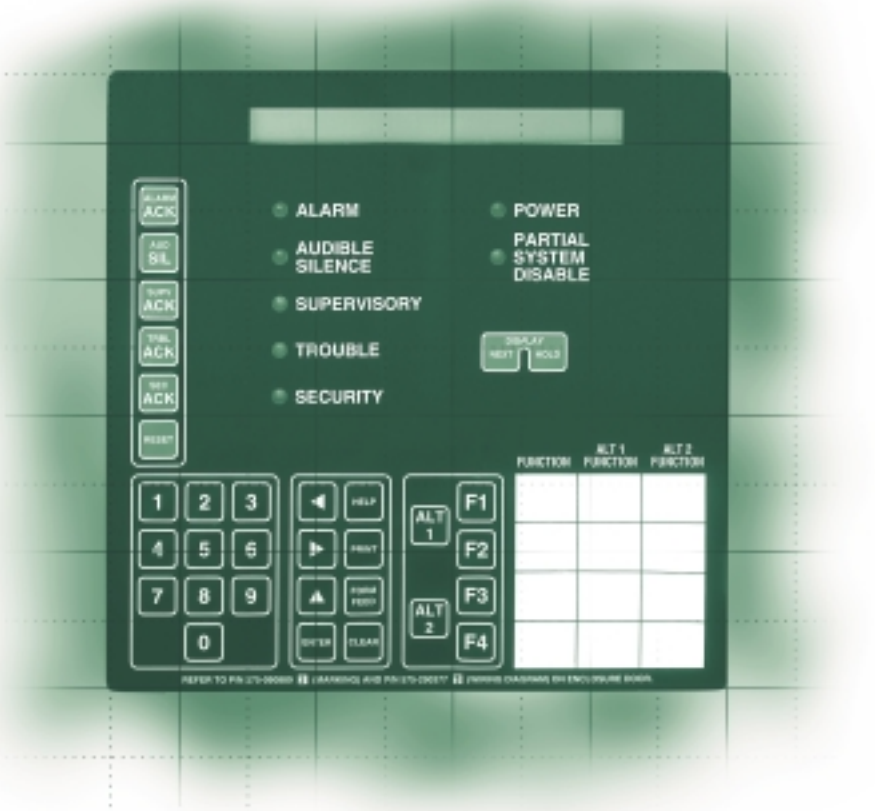


**This CD-Rom contains the information necessary to install, operate and maintain the Siemens, Cerberus Division MXL/MXLV and MXL-IQ Fire Protection Control Panels**

## Contents

**MXL/MXLV Control Panel**
**P/N 315-092036CD-8**
Personalize/ Printout Cover

**MXL-IQ Control Panel**
**P/N 315-093624CD-9**
Personalize/ Printout Cover

## Navigation

There are three ways to navigate:
1) Use the left hand index column (which appears as you proceed)
2) Use the green buttons above to get to the corresponding manual
3) Use the arrows in the menu bar above

There are 2 ways to enlarge or reduce:
1) Use the magnifying glass in the menu bar above
2) Use the three different page views in the menu bar.

SIEMENS

Cerberus Division

## CERBERUS PYROTRONICS™

# MXL/MXLV CONTROL PANEL

## Operation, Installation, and Maintenance Manual

Siemens Building Technologies, Inc.
8 Fernwood Road
Florham Park, New Jersey 07932

Siemens Building Technologies, Ltd.
50 East Pearce Street
Richmond Hill, Ontario L4B 1B7 CN

P/N 315-092036CD-8

Technical Manuals Online! - http://www.tech-man.com

## CAUTION

## ALL WIRING MUST BE DONE AS DESCRIBED BELOW TO OBTAIN SAFE AND PROPER SYSTEM OPERATION.

1. Earth ground the MXL enclosure properly; see the latest edition of the National Electrical Code for approved methods. Conduit ground is NOT adequate.
2. Separate all wiring for initiating devices (i.e., detectors, manual stations, TRI modules, etc.) from all other wiring in the MXL enclosure. To wire the System in compliance with UL 864, refer to the Power Limited Wiring Instructions for the MME-3 Enclosure, P/N 315-094883.
3. INSULATE ALL CABLE DRAIN WIRES from any conduit or earth grounded electrical box, including those in the MXL enclosure.
4. Connect shield cable drain wire ONLY inside the MXL enclosure.
5. No wiring used for any of the following can run outside the building:
   - an ALD loop
   - a RS-485 network
   - an NAC circuit used for audibles, audio, and telephone risers
   - a CZM-1/1B6 or CZM-4 initiating device loop

## WARNING

The user must follow the 24V power distribution indicated on pages 4-109 and 4-110.

The CZM power available on the MMB or PSR *must not be used* to provide 24V internal power to the OMM-1/-2 or TBM-2. Using this power may result in 24V failure due to a current limiting circuit; the system may not function properly.

Observe the 24V power loads listed in ***Appendix D - MXL Power Supply Load Calculations*** for all of the cards plugged into the OMM-1/-2. This will ensure that the system functions properly.

**For additional wiring information, refer to this manual or call Siemens Building Technologies, Inc. Technical Support Department at 1-800-248-7976.**

### UL Listings for MXL/MXLV

The complete MXL system is UL listed under the model name MXL. MXLV is used in this and other documentation to identify the basic listed MXL system, including the listed voice equipment described in this manual. MXLV itself is not a listed model or name, but is used for ease of presentation. The voice equipment is listed, however, as part of the basic MXL System.

Technical Manuals Online! - http://www.tech-man.com

# Table of Contents


## Chapter 1 Description ..... 1 - 1

**Introduction** ..... **1 - 1**

**Software** ..... **1 - 3**

**Components of the Basic MXL System** ..... **1 - 3**
Minimum MXL Control Panel Configuration ..... 1 - 3
MMB-2 Main Board ..... 1 - 5
MPS-6 Power Supply ..... 1 - 5
MPS-12 Power Supply ..... 1 - 5
MKB-2 Keyboard/Annunciator Panel ..... 1 - 6
RCC-1/1F Remote Command Center ..... 1 - 7
TSP-40 Logging Printer ..... 1 - 7
MME-3 or MLE-6 Enclosure ..... 1 - 7
TSW-2 Tamper Switch ..... 1 - 8
BP-61 Batteries ..... 1 - 8
BTX Batteries ..... 1 - 8
MOM-4 Card Cage ..... 1 - 9
MOM-2 Card Cage ..... 1 - 9
CSM-4 Signal Module ..... 1 - 10
CRM-4 Relay Module ..... 1 - 10
CZM-4 Conventional Zone Module ..... 1 - 10
ALD-2I Analog Loop Driver ..... 1 - 11
XLD-1 Analog Loop Driver ..... 1 - 11
CMI-300 Interface Module ..... 1 - 11
NET-4 Communication Interface ..... 1 - 12
NET-7 Communication Interface ..... 1 - 12
NET-7M Communication Interface ..... 1 - 13
NIM-1R Network Interface Module ..... 1 - 13
REP-1 Network Repeater Module ..... 1 - 14
PSR-1 Remote Power Supply ..... 1 - 14
PS-5A Power Supply ..... 1 - 15




Technical Manuals Online! - http://www.tech-man.com

PS-5N7 Network Interface/5V Power Supply ..... 1 - 15
MOI-7 Voice and Annunciator Driver ..... 1 - 16
MOD-16 Output Driver ..... 1 - 16
MID-16 Input Driver ..... 1 - 16
CZM-1B6 Remote Conventional Zone Module ..... 1 - 17
PIM-1 Peripheral Interface Module ..... 1 - 17
PIM-2 Peripheral Interface Module and PAL-1 Parallel Printer ..... 1 - 18
D2300CP Fiber Optic Interface ..... 1 - 18
Silent Knight Model 5128/5129 Digital Fire Communicator ..... 1 - 19

**The Voice System (MXLV) ..... 1 - 20**
Overview of the Voice System ..... 1 - 20
Capacity of the System ..... 1 - 20
System Options ..... 1 - 20
ACM-1 Audio Control Module ..... 1 - 21
TMM-1 Telephone Master Module ..... 1 - 22
MMM-1 Microphone Master Module ..... 1 - 22
VSM-1 Voice Switch and LED Module ..... 1 - 22
VLM-1 Voice LED Module ..... 1 - 23
VFM-1 Fan Control Module ..... 1 - 23
VSB-1 Voice Switch Blank ..... 1 - 24
TBM-2 Termination Block Module ..... 1 - 24
OMM-1 Output Master Module ..... 1 - 24
OMM-2 Output Master Module ..... 1 - 25
ASC-1 Amplifier Supervision and Backup Card ..... 1 - 26
ASC-2 Amplifier/Riser Supervision and Backup Card ..... 1 - 26
OCC-1 Output Control Card ..... 1 - 27
BTC-1 Backup Tone Card ..... 1 - 27
RCM-1 Riser Control Module ..... 1 - 28
ZAC-30 Zone Amplifier Card ..... 1 - 28
DMC-1 Digital Message Card ..... 1 - 29
ZC Zone Control Card Modules ..... 1 - 30
ZCT-8B Zone Card Telephone ..... 1 - 31
PLC-4 Power Limiting Module ..... 1 - 31
ICP-B6 Intelligent Control Point ..... 1 - 32

**Analog Addressable Devices ..... 1 - 33**
FP Intelligent / Analog Detector Series ..... 1 - 33
ID Intelligent/Analog Detector Series ..... 1 - 33
IL Intelligent/Analog Detector Series ..... 1 - 34
MSI Intelligent Manual Station Series ..... 1 - 35
TRI Intelligent Interface Module Series ..... 1 - 36



Technical Manuals Online! - http://www.tech-man.com

**Conventional Detectors ..... 1- 37**
DI Ionization Detector Series ..... 1 - 37
DT Thermal Detectors ..... 1 - 37
PE Photoelectric Detectors ..... 1 - 37
PBA-1191 Linear Beam Smoke Detector ..... 1 - 38

**Other Devices ..... 1 - 38**
LIM-1 Loop Isolator Module ..... 1 - 38

**Chapter 2 Installation ..... 2 - 1**
Installing MME-3 and MLE-6 Backboxes ..... 2 - 1
Installing the MPS-6 or MPS-12 ..... 2 - 3
General Instructions For Installing System Modules ..... 2 - 4
*Setting DIP Switches ..... 2 - 4*
Installing the MMB-1/-2 (Main Enclosure) ..... 2 - 4
Installing the PSR-1 (Remote Enclosure) ..... 2 - 5
*Security Mode—UL 1076 Disabling the Tamper Switch (S2-SW5) ..... 2 - 6*
Installing the NET-4 onto the PSR-1 ..... 2 - 6
Installing the NET-7 onto the PSR-1 ..... 2 - 6
Installing the NET-7M onto the PSR-1 ..... 2 - 7
Installing the MOM or OMM ..... 2 - 7
*Installing the Card Guides on the MOM ..... 2 - 7*
*Installing the Card Guides on the OMM ..... 2 - 8*
Installing the TSP-40 Printer ..... 2 - 8
*Installing the Paper Roll ..... 2 - 10*
*Changing the Paper Roll ..... 2 - 11*
Installing the PIM-1 ..... 2 - 11
Installing the TBM-2 (MXLV Only) ..... 2 - 12
Installing the Assembled Mounting Plate (MBR-MP/MBR-3MP) ..... 2 - 12
Installing the MKB-2 Keyboard/Annunciator ..... 2 - 12
*Setting the ANN-1 Network Address ..... 2 - 13*
Installing the ACM-1 (MXLV Only) ..... 2 - 14
Installing the BTC-1 on the ACM-1 (MXLV Only) ..... 2 - 15
*Setting the Tones ..... 2 - 15*
Installing the MMM-1 (MXLV Only) ..... 2 - 16
Installing the TMM-1 (MXLV Only) ..... 2 - 17
Install the MHD Panels ..... 2 - 18
Installing the TSW-2 Tamper Switch ..... 2 - 18
Installing the VSM/VLM/VFM/VSB Modules ..... 2 - 18



Technical Manuals Online! - http://www.tech-man.com

General Instructions for Installing Plug-in Modules into the MOM ..... 2 - 20
*Half-Width Modules ..... 2 - 20*
*Full-Width Modules ..... 2 - 21*
Installing the CSM-4 ..... 2 - 22
*Releasing Service per NFPA 12A, NFPA 13, and NFPA 2001 ..... 2 - 24*
Installing the CRM-4 ..... 2 - 24
Installing the CZM-4 ..... 2 - 25
Installing the ALD-2I ..... 2 - 25
Installing the XLD-1 ..... 2 - 26
Installing the CMI-300 ..... 2 - 26
Installing the NIM-1R ..... 2 - 27
Installing the REP-1 ..... 2 - 28
Installing the NET-7 into the MOM ..... 2 - 29
Installing the NET-7M into the MOM ..... 2 - 29
General Instructions for Installing Plug-in Cards into the OMM ..... 2 - 30
*Half-Width Modules ..... 2 - 30*
*Full-Width Modules ..... 2 - 30*
Installing the ASC-1 ..... 2 - 32
Installing the ASC-2 ..... 2 - 33
Installing the OCC-1 ..... 2 - 35
Installing the BTC-1 on the OCC-1 ..... 2 - 36
*Setting the Tones ..... 2 - 36*
Installing the DMC-1 ..... 2 - 37
Installing the ZC1-8B ..... 2 - 38
Installing the ZC2-8B ..... 2 - 39
Installing the ZC2-4AB ..... 2 - 40
Installing the ZC3-4AB ..... 2 - 41
Installing the ZCT-8B ..... 2 - 42
Installing the ZAC-30 ..... 2 - 43
Installing the PLC-4 ..... 2 - 46
*Installing the PL864 Cards onto the PLC-4 ..... 2 - 46*
Installing the RCM-1 ..... 2 - 47

**Chapter 3 Operation ..... 3 - 1**

**Using The MKB Keyboard/Annunciator Panel in Local Mode ..... 3 - 1**
The Display ..... 3 - 1
Display Keys ..... 3 - 2
System Control Keypads and LEDs ..... 3 - 2
*Addresses ..... 3 - 2*
*Fixed Addresses ..... 3 - 3*



Technical Manuals Online! - http://www.tech-man.com

Numeric Keypad ..... 3 - 3
Command Keypad ..... 3 - 3
The Special (ALT and Function) Keypad ..... 3 - 4
Internal Audible Alarm ..... 3 - 4
The Printer and PRINT and CLEAR Keys ..... 3 - 4
Modes Of Operation ..... 3 - 4

**Normal Mode ..... 3 - 4**

**Alarm ..... 3 - 5**
Responding to an Alarm ..... 3 - 5
How the System Annunciates Alarms ..... 3 - 5
Viewing the List of Alarms ..... 3 - 6
How to Individually Acknowledge an Alarm ..... 3 - 6
How to Block Acknowledge an Alarm ..... 3 - 6
Silencing The System ..... 3 - 6

**Supervisory ..... 3 - 7**
How the System Annunciates Supervisories ..... 3 - 7
Viewing the List of Supervisories ..... 3 - 7
How to Individually Acknowledge a Supervisory ..... 3 - 8
How to Block Acknowledge a Supervisory ..... 3 - 8

**Trouble ..... 3 - 8**
How the System Annunciates Troubles ..... 3 - 8
Viewing the List of Troubles ..... 3 - 9
How to Individually Acknowledge a Trouble ..... 3 - 9
How to Block Acknowledge a Trouble ..... 3 - 10

**Security ..... 3 - 10**
How the System Annunciates Security Conditions ..... 3 - 10
Viewing the List of Security Conditions ..... 3 - 11
How to Individually Acknowledge a Security Condition ..... 3 - 11

**Reset Procedures ..... 3 - 11**
Hard Reset ..... 3 - 11
Soft Reset ..... 3 - 12

**Using The MKB Keyboard/Annunciator Panel in Global Mode ..... 3 - 13**
Limitation/Restrictions ..... 3 - 13
Global MKB Display Format ..... 3 - 13
Global Keypad Operation ..... 3 - 14



Technical Manuals Online! - http://www.tech-man.com

**Voice Operations ..... 3 - 15**
The Four Categories of Sound ..... 3 - 15
*Page ..... 3 - 16*
*Evac ..... 3 - 16*
*Alert ..... 3 - 16*
*Other ..... 3 - 16*
Standard Tones ..... 3 - 16
LED Visual Indicators ..... 3 - 17
Automatic Voice Operation ..... 3 - 17
Manual Voice Operation ..... 3 - 17
Audibles ..... 3 - 18
*The Error Audible ..... 3 - 18*
*The Call-In Audible ..... 3 - 18*
*The Reset Audible ..... 3 - 18*
Using the ALL Buttons ..... 3 - 18
Using the SEL Buttons ..... 3 - 18
Using the Microphone ..... 3 - 18
Telephone Call-Ins ..... 3 - 19
Phone Page and Warden's Page ..... 3 - 19
Voice Audible Silence ..... 3 - 19
Using the Utility Functions ..... 3 - 20
*EXT SOURCE ..... 3 - 20*
*CLEAR MANUAL ..... 3 - 20*
*DISPLAY OFF ..... 3 - 20*
*DISPLAY AUTOMATIC ..... 3 - 20*
*AUDIO PREVIEWING ..... 3 - 20*
Remote Command Stations ..... 3 - 20
*REQUEST ACCESS ..... 3 - 20*
*GRANT ACCESS ..... 3 - 20*
*DENY ACCESS ..... 3 - 21*
Selecting the External Source ..... 3 - 21
Telephone Operation ..... 3 - 21
*To use a Remote Telephone ..... 3 - 21*
*Telephone Zone LEDs ..... 3 - 21*
*Auto Telephone Zones in Wardens Page ..... 3 - 21*

**Voice System Operation Overview ..... 3 - 23**

**Networked Voice Operation ..... 3 - 24**
Networked OCC-1 ..... 3 - 24
Networked ACM-1 ..... 3 - 24
Existing MXLV VSM-1 Switches ..... 3 - 24



Technical Manuals Online! - http://www.tech-man.com

**Using The Menu ..... 3 - 25**
General Instructions for Navigating the Menu ..... 3 - 25
Entering Your Password ..... 3 - 25
Addresses ..... 3 - 26
*Entering a Module Number and Device Number ..... 3 - 26*
*Entering a Module Number ..... 3 - 26*
*Entering a Device Number with the Module Number ..... 3 - 27*
The Acknowledge Menu ..... 3 - 27
*Acknowledge: Alarm ..... 3 - 27*
*Acknowledge: Supervsry ..... 3 - 30*
*Acknowledge: Trouble ..... 3 - 31*
*Acknowledge: Security ..... 3 - 31*
The List Menu ..... 3 - 32
*List: Status ..... 3 - 33*
*List: Alarm ..... 3 - 33*
*List: Supervsry ..... 3 - 34*
*List: Trouble ..... 3 - 34*
*List: Security ..... 3 - 35*
*List: Senstvty ..... 3 - 36*
*List: Voltages ..... 3 - 36*
*List: Voltages - Analog ..... 3 - 37*
*List: Voltages - Thresh ..... 3 - 37*
*List: Voltages - Sens ..... 3 - 37*
*List: Voltages - Calib ..... 3 - 37*
*List: Voltages - ID ..... 3 - 37*
*List: Voltages - ID2 ..... 3 - 37*
*List: Temp ..... 3 - 39*
*List: Mod_type ..... 3 - 39*
*List: Dev_Type ..... 3 - 40*
*List: Message ..... 3 - 40*
*List: SW_Version ..... 3 - 41*
*List: Output_states ..... 3 - 42*
*List: Dev_usages ..... 3 - 42*
*List: Node_address ..... 3 - 43*
*List: Percent/ft ..... 3 - 43*
*List: Percent/ft -Senstvty ..... 3 - 43*
*List: Percent/ft -Pre-alarm ..... 3 - 43*
*List: Percent/ft -Analog ..... 3 - 43*
*List: ASD_apps ..... 3 - 44*
*List: Disarmed_state ..... 3 - 44*



Technical Manuals Online! - http://www.tech-man.com

The Control Menu ..... 3 - 45
*Control: Reset* ..... *3 - 45*
*Control: Senstvty* ..... *3 - 45*
*Control: Arm/dis* ..... *3 - 46*
*Control: Output_on/off* ..... *3 - 46*
*Control: Loop_arm* ..... *3 - 47*
*Control: Loop_disarm* ..... *3 - 47*
*Control: Net_link_Request* ..... *3 - 48*
*Control: Percent/ft* ..... *3 - 48*
*Control: Percent/ft -Senstvty* ..... *3 - 48*
*List: Percent/ft -Pre-alarm* ..... *3 - 48*
*Control: Change_Apps* ..... *3 - 49*
The Test Menu ..... 3 - 49
*Test: Set_time* ..... *3 - 50*
*Test: Gnd_flt* ..... *3 - 50*
*Test: Gnd_flt - Main* ..... *3 - 50*
*Test: Gnd_flt - Remote* ..... *3 - 50*
*Test: Power* ..... *3 - 51*
*Test: Power - Main* ..... *3 - 51*
*Test: Power - Main - Voltage* ..... *3 - 51*
*Test: Power - Main - Current* ..... *3 - 51*
*Test: Power - Remote* ..... *3 - 51*
*Test: Power - Remote - Voltage* ..... *3 - 51*
*Test: Power - Remote - Current* ..... *3 - 52*
*Test: Power - Remote - Options* ..... *3 - 52*
*Test: MKB1_Lamptest* ..... *3 - 52*
*Test: MKB1_Lamptest - LEDs* ..... *3 - 52*
*Test: MKB1_Lamptest - Display* ..... *3 - 52*
*Test: Device_LED* ..... *3 - 53*
*Test: MOI_Lamp_Test* ..... *3 - 53*
*Test: PAX_Lamptest* ..... *3 - 53*
*Test: ACM_Lamptest* ..... *3 - 53*
*Test: X_Network* ..... *3 - 54*
*Test: M_Network* ..... *3 - 54*
*Test: NET7_Diags* ..... *3 - 54*
*Test: Override* ..... *3 - 54*
*Test: Override - Alr_Verify* ..... *3 - 54*
*Test: Override - Alr_Confirm* ..... *3 - 55*
*Test: Det_cleaned* ..... *3 - 55*
*Test: Event Log* ..... *3 - 55*
*Test: Event Log - Hist_Ctrl and Hist_Erase* ..... *3 - 56*
*Test: Pyro_Diags* ..... *3 - 59*



Technical Manuals Online! - http://www.tech-man.com

*Test: Pre_alarm* ..... *3 - 59*
*Test: ASD_Devices* ..... *3 - 60*
*Test: Summarize* ..... *3 - 60*
*Test: Summarize - Select_Mods* ..... *3 - 60*
*Test: Summarize - OFF* ..... *3 - 61*
*Test: Summarize - ON* ..... *3 - 61*
*Test: Manual_Activate* ..... *3 - 61*
*Test: Manual_Activate - Test* ..... *3 - 62*
The Walktest Menu ..... 3 - 62
*Suggested Walktest Procedure* ..... *3 - 62*
*Walktest: System_wAUD / System_SIL* ..... *3 - 63*
*Walktest: Loop_wAUD / Loop_SIL* ..... *3 - 64*
*Walktest: Zone_wAUD / Zone_SIL* ..... *3 - 66*
*Walktest Ending Sequence* ..... *3 - 67*

**Chapter 4 Connections and Ratings ..... 4-1**

ACM-1 ..... 4 - 1
ALD-2I ..... 4 - 3
ASC-1 ..... 4 - 5
ASC-2 ..... 4 - 7
CMI-300 ..... 4 - 11
CRM-4 ..... 4 - 13
CSM-4 ..... 4 - 15
CZM-1B6 ..... 4 - 19
CZM-4 ..... 4 - 23
D2300CP ..... 4 - 25
DMC-1 ..... 4 - 29
ICP-B6 ..... 4 - 31
MMB-2 ..... 4 - 39
MOI-7, MOD-16, MID-16 ..... 4 - 45
MOM-2 ..... 4 - 51
MOM-4 ..... 4 - 53
NIM-1R ..... 4 - 55
OCC-1 ..... 4 - 59
OMM-1 ..... 4 - 61
OMM-2 ..... 4 - 63
PIM-1 ..... 4 - 65
PIM-2 / PAL-1 ..... 4 - 67
PLC-4 ..... 4 - 71
PS-5A ..... 4 - 73
PS-5N7 ..... 4 - 75



Technical Manuals Online! - http://www.tech-man.com

PS-5N7 ..... 4 - 75
PSR-1, NET-4, NET-7, NET-7M ..... 4 - 79
RCC-1/-1F ..... 4 - 87
RCM-1 ..... 4 - 89
REP-1 ..... 4 - 103
Silent Knight Model 5128/5129 ..... 4 - 105
TBM-2 ..... 4 - 107
VSM-1, VLM-1 and VFM-1 ..... 4 - 111
XLD-1 ..... 4 - 113
ZAC-30 ..... 4 - 115
ZC1-8B ..... 4 - 121
ZC2-4AB ..... 4 - 127
ZC2-8B ..... 4 - 131
ZC3-4AB ..... 4 - 135
ZCT-8B ..... 4 - 139

## Appendix

Compatible Devices ..... A - 1
Device Analog Voltages ..... B - 1
MXL Battery Calculations ..... C - 1
MXL Power Supply Load Calculations ..... D - 1
Alarm Verification ..... E - 1
Envirolink ..... F - 1
Latching/Non-Latching Troubles ..... G - 1
Installing A Security Point ..... H - 1
Application Specific Detection (ASD) ..... I - 1
Testing ..... J - 1
MXL Trouble Messages ..... K - 1
Power Limited Wiring ..... L - 1
New Two Stage Alarm ..... M - 1

## Glossary

## Index



Technical Manuals Online! - http://www.tech-man.com

# Description

## Introduction

The **CERBERUS PYROTRONICS™** Model MXL Control Panel is an advanced fire protection and alarm control panel that provides superior fire protection, voice evacuation, and multiplexed alarm reporting.

The basic MXL Control Panel can monitor up to two analog loops, each containing up to 60 **CERBERUS PYROTRONICS™** intelligent devices. Through the addition of a MOM-4 card cage, the System can be expanded. With the addition of PSR-1 power supplies, the System can be expanded to as many as 34 analog loops.

The MXL Control Panel can control a wide variety of System outputs, such as conventional Form C relay contacts, solid state outputs, supervised outputs to control alarm notification appliances, municipal tie outputs, and leased line outputs.

The MXL Control Panel can process logical decisions based on the status of initiating devices. The System can respond with customer-specified sequences of output circuit operation.

The System continuously checks all software and hardware for proper operation. It continuously checks all System memory components, control panel electronic hardware, and the System program. A hardwire watchdog circuit is provided to ensure that System programs are functioning properly. If a problem develops with the program or processor, the watchdog circuit places the System into a trouble condition and resets it.

To ensure reliable operation, the MXL System is composed of independent modules, each with its own microprocessor. If the main panel's central processing unit stops, these modules, operating in degrade, still annunciate any alarm or trouble through common lines called *Any Alarm* and *Any Trouble.* All of the modules communicate with the MXL Panel through a serial communications system.

All modules are continuously supervised for their presence and for proper operation. Problems are shown on the display to aid in servicing and troubleshooting (See ***Using the Menu in Chapter 3 - Operation***).

The MXL System is designed so that fire alarm operation has first priority over all other modes of operation. If the System loses battery and commercial power, it automatically goes through an initialization routine when power returns.



Technical Manuals Online! - http://www.tech-man.com

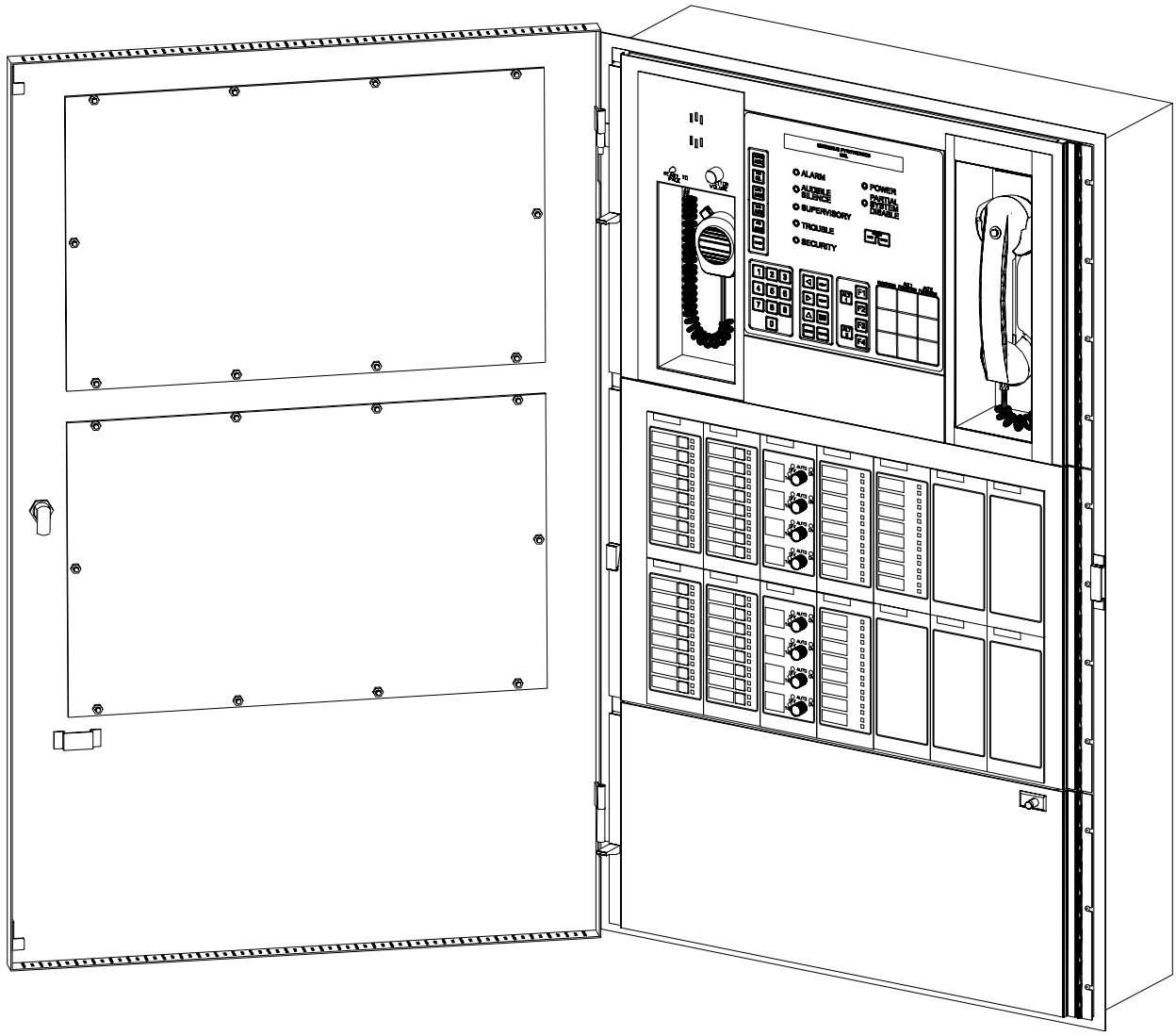


**The Basic MXLV Control Panel**



Technical Manuals Online! - http://www.tech-man.com

## Software

The MXL software was written in a high level language for ease of maintenance. The software incorporates a multitasking operating system that allows the microprocessor to handle many tasks almost simultaneously. This enables the MXL System to handle communications to all initiating and output option boards and to the annunciator. This also enables the MXL System to check that everything is running.

When the MXL Control Panel receives power, the System runs a start-up procedure that sets up all initial conditions. The System then starts the operating system and the initialization routines for all of the tasks, most of which concern handling System modules. When the display task is finished initializing, it displays the default time and date at powerup. Initialization of other modules may take several seconds, but this takes place in the background and so does not affect System operation.

The MXL System polls all network addresses to see that all specified modules are present and that there are no unspecified modules. Any modules or devices that do not agree with the programmed data are reported as troubles on the annunciator.

## Components of the Basic MXL System

### Minimum MXL control panel configuration to meet NFPA 72 Local, Municipal Tie, Remote Station, Proprietary and Central Station, UL 1076, and NFPA 12A, 13 and 2001

The table on the next page presents the minimum configuration necessary to meet NFPA 72 Local, Municipal Tie, Remote Station, Proprietary and Central Station, UL 1076, and NFPA 12A, 13 and 2001.

### Components of the basic system

The basic MXL Control Panel consists of the following components:

- MMB-2 Main Board
- MPS-6/MPS-12 Power Supply
- MKB-2 Keyboard/Annunciator
- TSP-40 Logging Printer (NFPA 72 Proprietary and UL 1076 configurations)
- MME-3 Enclosure
- TSW-2 Tamper Switch (UL 1076 configuration only)
- BP-61, BTX-1, or BTX-2 Batteries



Technical Manuals Online! - http://www.tech-man.com

## MINIMUM MXL CONFIGURATION TO MEET NFPA 72, UL 1076, AND NFPA 12A, 13, AND 2001

| Module | Description | NFPA Minimum Quantity | | | | | | |
|---|---|---|---|---|---|---|---|---|
| | | Local | Auxiliary | Remote Station | Proprietary | Central Station[a] | UL 1076[b] | 12A, 13, or 2001[l] |
| MMB-1/-2[c] | MXL Main Unit | 1 | 1 | 1 | 1 | 1 | 1 | 1 |
| MPS-6 | Power Supply | 1 | 1 | 1 | 1 | 1 | 1 | 1 |
| MPS-12 | Power Supply | 1 | 1 | 1 | 1 | 1 | 1 | 1 |
| MKB-2 | Keyboard/Annunciator Panel | 1 | 1 | 1 | 1 | 1 | 1 | 1 |
| TSP-40 | Logging Printer | X | X | X | 1 | X | 1[d] | X |
| MOM-4 | Optional Module Card Cage | X | 1 | 1 | X | X | X | X |
| CSM-4 | Signal Module | X | 1[k] | 1 or 2*[k] | X | X | X | 1[k] |
| CZM-4 | Conventional Zone Module | ** | ** | ** | ** | ** | X | ** |
| ALD-2I | Analog Loop Driver | ** | ** | ** | ** | ** | *** | ** |
| CZM-1B6 | Remote Conventional Zone Module | ** | ** | ** | ** | ** | X | ** |
| — | Batteries[e,f] | 1[e] | 1[e] | 1[e] | 1[e] | 1 | 1 | 1[e] |
| TSW-2 | Tamper Switch | X | X | X | X | X | 1[d] | X |
| PSR-1 | Remote Power Supply | X | X | X | X | X | X[g] | X |
| NET-4/-7 | Communication Interface**** | X | X | X | X | X | X | X |
| MOI-1/-7 | Voice and Annunciator Driver | X | X | X | X | X | X | X |
| MOD-16 | Output Driver | X | X | X | X | X | X | X |
| MID-16 | Inpout Module | X | X | X | X | X | X | X |
| PIM-1 | Peripheral Interface Module | X | X | X | 1[h] | X | 1[h] | X |
| CMI-300 | MXL/CXL Interface | X | X | X | X | X | X[j] | X |

X = Not Required

* One CSM-4 circuit must be configured for alarm transmission. In addition, depending on the local authority having jurisdiction, additional circuits may be required for Supervisory or Trouble transmission.

** Any one of these modules is sufficient as an initiating device.

*** Only TRI-60, TRI-60R, TRI-60D, TRI-B6, TRI-B6R, and TRI-B6D can be used as security devices.

**** Do not use NET-4s and NET-7s in the same system.

NOTES

a. See Silent Knight Model 5128/5129 Connections and Ratings for NFPA 72 Central Station.

b. Refer to System MXL Wiring Diagram, P/N 575-095370

c. The MMB must be programmed by CSG-M for all System configurations (See *CSG-M Programming Manual*, P/N 315-090381).

d. UL 1076 requires a Model TSW-2 tamper switch and a TSP-40 printer.

e. The batteries available are: BP-61, BTX-1, and BTX-2. The BP-61 is a module consisting of four 6V, 15 AH batteries. The BTX-1 batteries are a pair of 12V, 31 AH batteries. The BTX-2 batteries are a pair of 12V, 55 AH batteries. Actual battery size depends on System configuration.

f. See Appendix C for Battery Calculations.

g. The PSR-1 is not listed for security.

h. The PIM-1 requires the connection of the RC-119 supervised printer. The TSP-40 is not required.

j. The CMI-300 is not listed for UL 1076 application.

k. Refer to the CSM-4 Installation Instructions (P/N 315-090854) for programming.

l. The MXL System is FM approved for proprietary fire for Fire Alarms, Water Flow, Sprinkler Supervisory Service and Intrinsically Safe Operation.



Technical Manuals Online! - http://www.tech-man.com

## MMB-2 Main Board

The MMB-2 Main Board contains:

- 16-bit central processing unit (CPU)
- System read-only memories (EPROMs)
- System random-access memory (RAM)
- FLASH memory for the CSG-M
- Watchdog circuitry
- Network interface circuitry (MNET)
- Battery charger
- 24V regulator
- AC transfer relay
- Class A CZM-1B6 power
- 24 VDC unregulated supply
- Two analog loops (initiating/control)
- Two notification appliance circuits (audible/visual circuits)
- Three dry-contact relays

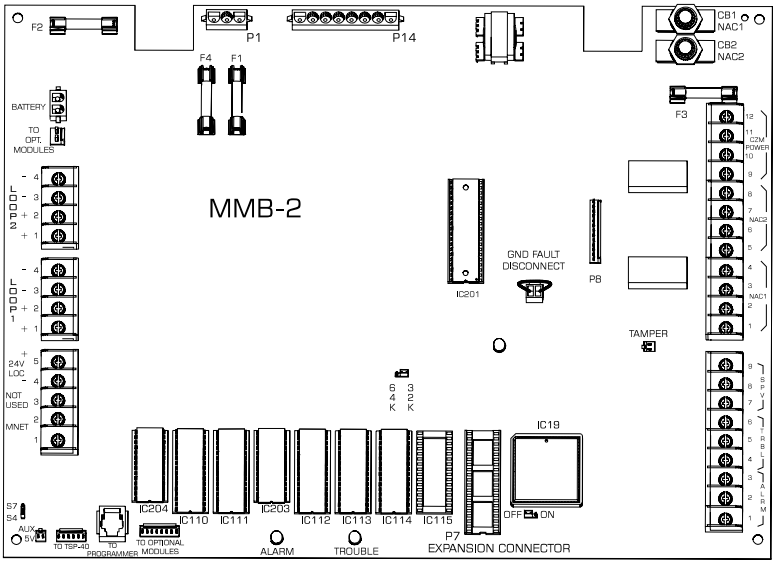


**MMB-2 Main Board**

## MPS-6 Power Supply

The MPS-6 is a supervised power supply that converts 120 VAC, 60 Hz to unregulated 24 VDC at 6A.

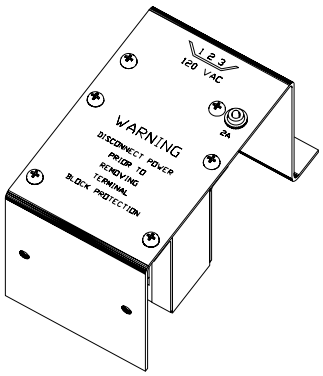


**MPS-6 Power Supply**

## MPS-12 Power Supply

The MPS-12 is a high current power supply that provides the MXL System with primary 24 VDC power. It is rated at 12 amps and is unfiltered and unregulated. The MPS-12 supplies the MMB-2 or PSR-1 and its expansion modules with the power required for normal operation. The module incorporates a 5 amp resettable circuit breaker on the primary input, a 15 amp fuse on the 24V output, and a built-in AC line filter for surge and noise suppression. The MPS-12 mounts in the MXL enclosure backbox.

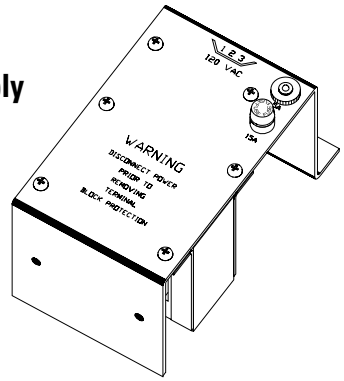


**MPS-12 Power Supply**



Technical Manuals Online! - http://www.tech-man.com

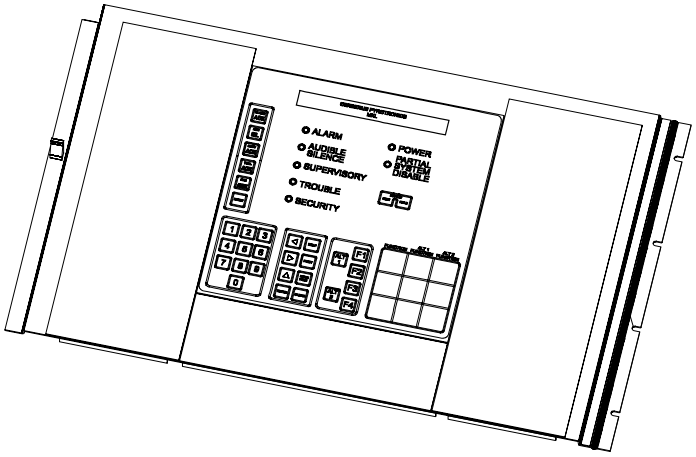


**MKB-2 Keyboard/Annunciator Panel**

## MKB-2 Keyboard/Annunciator Panel

The MKB-2 Annunciator communicates with the MMB-1/-2 Main Control Board through the System network link. This module provides the MXL with its primary control and annunciation.

The MKB-2 module has an 80-character, backlit LCD alphanumeric display that continuously updates information about the System status and user defined device messages. If there are multiple alarms, and/or troubles, including supervisories and security conditions, the MKB-2 displays the highest priority event that occurred. The user can see additional alarm and trouble data by pressing the **NEXT** key. Press the **HOLD** key at any time to stop the display from scrolling.

The Control Panel contains the following indicators:

- Alarm
- Power
- Audibles Silenced
- Partial System Disabled
- Supervisory
- Trouble
- Security

The MKB-2 has switches for acknowledging fire alarms **(ALARM ACK)**, silencing audibles **(AUD SIL)**, acknowledging supervisories **(SUPV ACK)**, acknowledging troubles **(TRBL ACK)**, and acknowledging security conditions **(SEC ACK)**. There is also a separate key for resetting the Control Panel **(RESET)**.

In addition the module has display keys (**NEXT** and **HOLD**), a numerical keypad, **PRINT, HELP,** and **CLEAR** keys, and user-configurable function keys.



Technical Manuals Online! - http://www.tech-man.com

## RCC-1/1F Remote Command Center

The RCC-1 Remote Command Center is an optional MXL/MXLV System remote keyboard panel. The RCC-1F Remote Command Center, which is used for flush mounting applications, has a ¾-inch flange on all four sides of the enclosure.

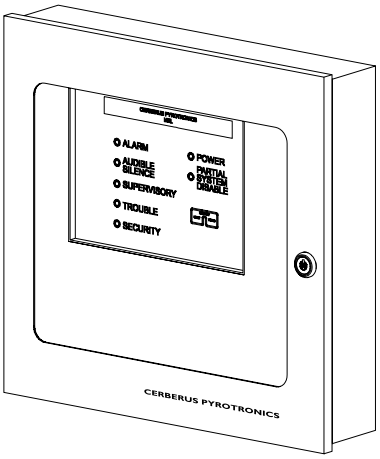


**RCC-1/1F Remote Command Center**

## TSP-40 Logging Printer

The TSP-40 Logging Printer is installed in the MXL backbox and provides a paper record of the activity of the System.

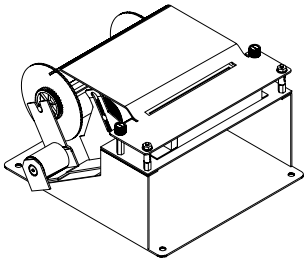

**TSP-40 Logging Printer**

## MME-3 or MLE-6 Enclosure

The MME-3 is a medium-size and the MLE-6 is a large-size enclosure for the MXL/MXLV System. Each enclosure consists of a backbox and front door that is shipped assembled. Note that the backbox has a flanged lip to permit semi-flush mounting in addition to the usual surface mounting.

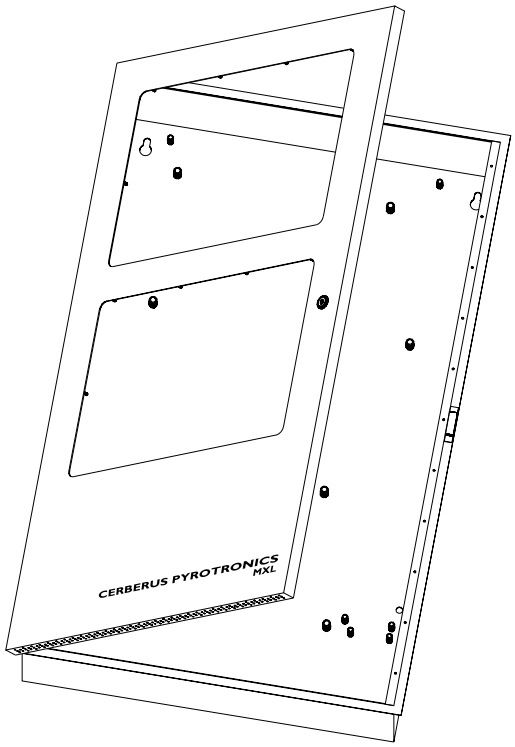


**MME-3 Enclosure**



Technical Manuals Online! - http://www.tech-man.com

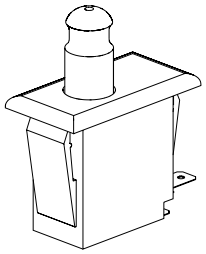

TSW-2 Tamper Switch

### TSW-2 Tamper Switch

The TSW-2 Tamper Switch is a three-position switch that monitors the opening of the MXL enclosure and reports a security condition. Closing the door automatically returns the switch to its normal operating position. The switch can be pulled out to indicate a closed position for maintenance purposes.

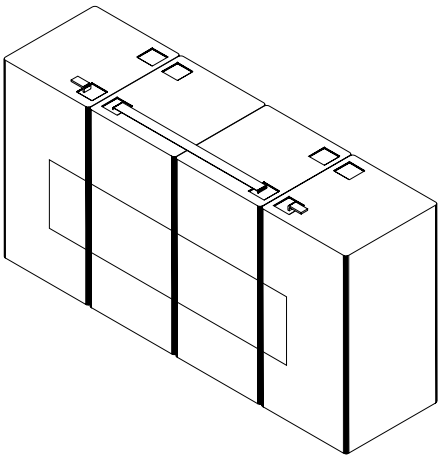

BP-61 Batteries

### BP-61 Batteries

The BP-61 is a module consisting of four 6V, 15 AH batteries. The BP-61 is recommended for the NFPA 72 Local and 72 Proprietary and the UL 1076 Systems. Actual battery size depends on System configuration. See ***Appendix C- Battery Calculations.***

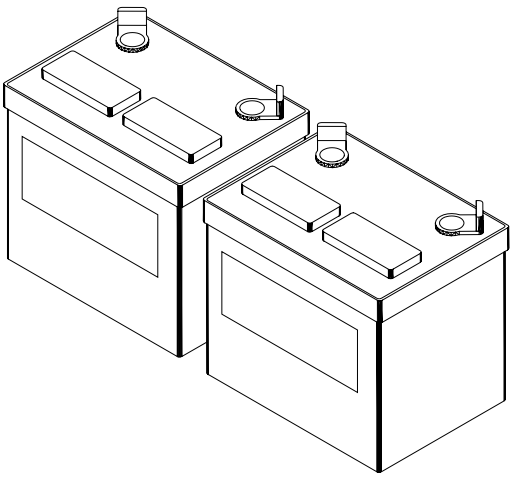

BTX Batteries

### BTX Batteries

The BTX-1 batteries are a pair of 12V, 31 AH batteries. The BTX-2 batteries are a pair of 12V, 55 AH batteries. Actual battery size depends on System configuration. See ***Appendix C - Battery Calculations.***



Technical Manuals Online! - http://www.tech-man.com

The following modules are available as options to the MXL Control Panel:

## MOM-4 Card Cage

The MOM-4 Card Cage contains four slots for optional module cards; it can handle four half-width cards or two full-width cards. The MOM-4 provides two power connector receptacles and two data connector receptacles. A 24 VDC cable that provides the main power used by the optional modules and an eight-wire ribbon cable for connection of 5 VDC and data are provided with the MOM-4 installation kit.

A System with an MME-3 backbox can include as many as three MOM-4s in the backbox. **If you install a printer in that backbox, only two MOM-4s can be installed.**

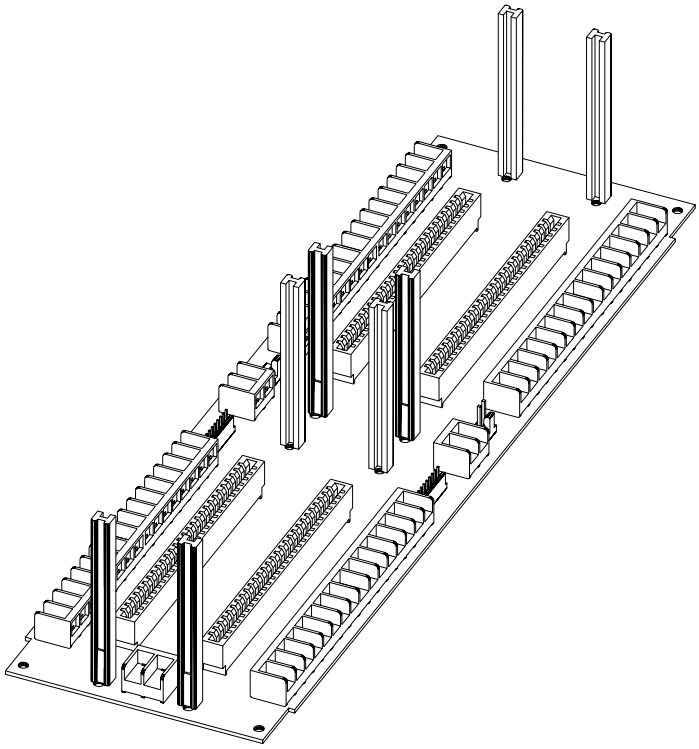

**MOM-4 Card Cage**

## MOM-2 Card Cage

The MOM-2 Card Cage provides the MXL with two card slots for optional modules. Each MOM-2 has space for one full-width optional module or two half-width optional modules. The MOM-2 comes with two card guides for mounting one full-width module. The half-width modules come with the necessary extra card guides for mounting them.

The MOM-2 provides two power connector receptacles, two power connection terminal blocks, and two data connector receptacles. A 24 VDC cable that provides the main power used by the optional modules and an eight-wire ribbon cable for connection of 5 VDC and data lines are provided with the MOM-2 installation kit.

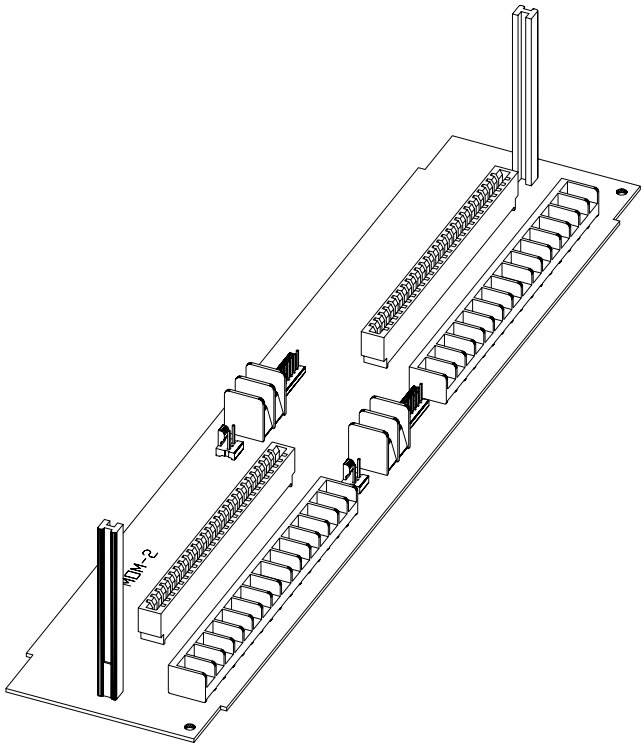


**MOM-2 Card Cage**



Technical Manuals Online! - http://www.tech-man.com

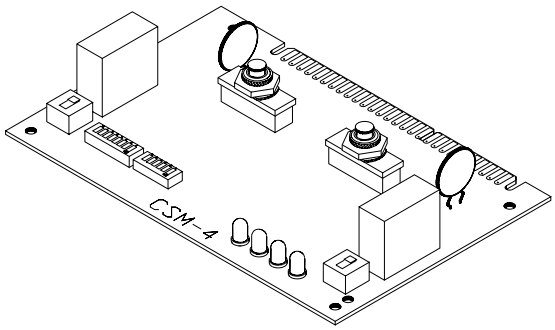


**CSM-4 Signal Module**

### CSM-4 Signal Module

The CSM-4 Signal module controls two supervised notification appliance circuits. Each circuit is capable of either Style Z (Class A) or Style Y (Class B) operation. Each circuit can be individually configured for notification appliances, municipal tie, leased line, or releasing service per NFPA 12A, 13 and 2001.

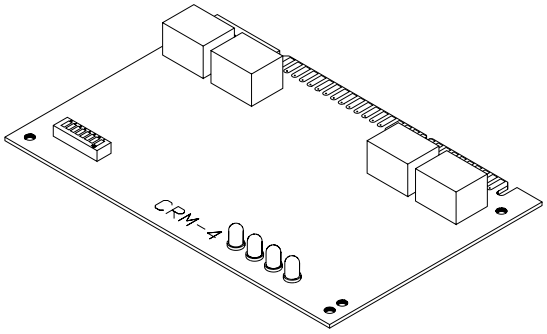


**CRM-4 Relay Module**

### CRM-4 Relay Module

The CRM-4 Relay module is an output control module that contains four relay outputs. Form C contacts are rated at 2A, 30 VDC/120 VAC resistive.

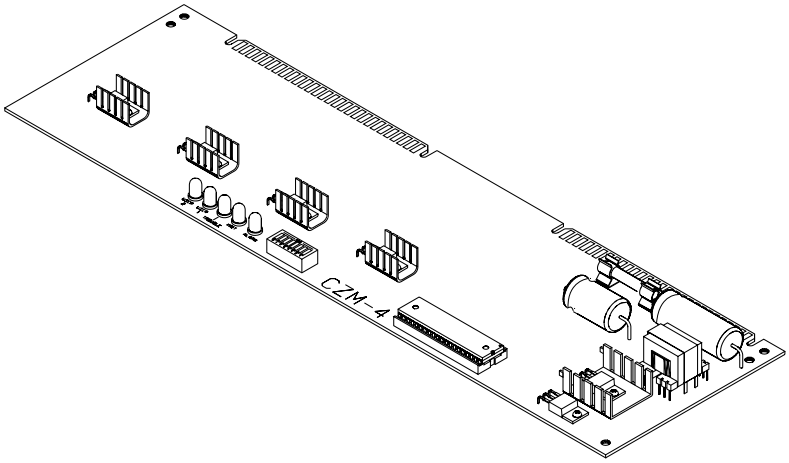


**CZM-4 Conventional Zone Module**

### CZM-4 Conventional Zone Module

The CZM-4 Conventional Zone module provides four initiating device circuits capable of Style D (Class A) or Style B (Class B) operation. Each zone supports up to thirty two-wire detectors, one linear beam detector or an unlimited number of shorting devices. Each zone has its own address. You can use the CSG-M to write a custom message for each zone (See the ***CSG-M Programming Manual***, P/N 315-090381).



Technical Manuals Online! - http://www.tech-man.com

## ALD-2I Analog Loop Driver

The ALD-2I Analog Loop Driver provides two signaling line circuits capable of Style 6 (Class A) or Style 4 (Class B) operation for monitoring analog devices. Each loop is capable of monitoring up to 60 analog devices. Each device has its own address. You can use the CSG-M to write a custom message for each device (See the ***CSG-M Programming Manual***, P/N 315-090381).

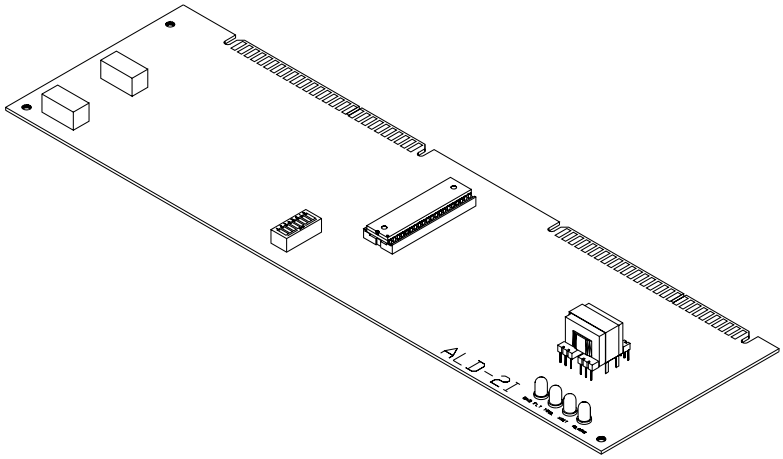


**ALD-2I Analog Loop Driver**

## XLD-1 Analog Loop Driver

The XLD-1 is an optional MXL network module that connects XL3 analog addressable devices to the MXL System. Each loop is capable of monitoring up to 30 analog devices. The module uses four consecutive network addresses on the System. Devices connected to the XLD-1 circuits are supervised by the MXL Control Panel.

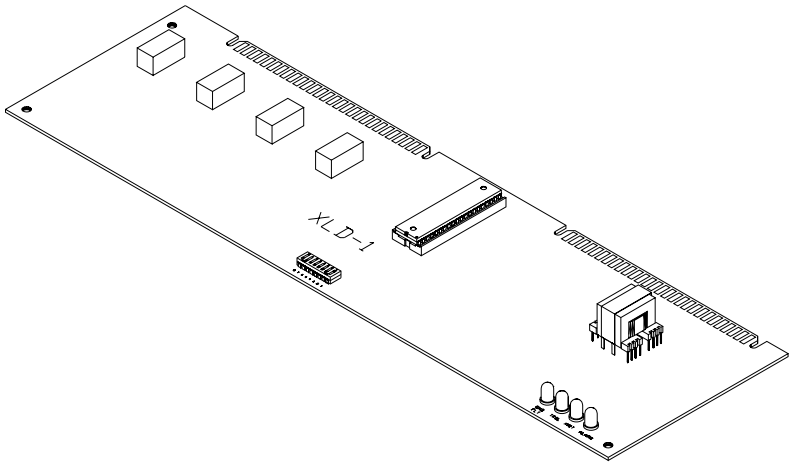


**XLD-1 Analog Loop Driver**

## CMI-300 Interface Module

The CMI-300 provides modem communications between an MXL System and a CXL System. The CMI-300 module is located on the MOM-4 board in the MXL enclosure. The CMI-300 plugs into a half slot in the MOM-4. It translates signals from the MXL communication lines of the MMB-1/-2 to CXL modem signals. This signal is then transmitted along suitable cable to the CXM-1 modules in the CXL enclosure.

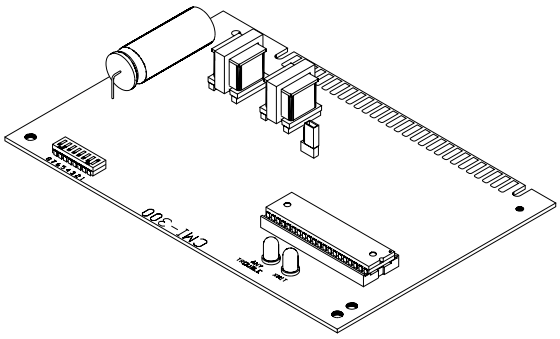


**CMI-300 Interface Module**



Technical Manuals Online! - http://www.tech-man.com

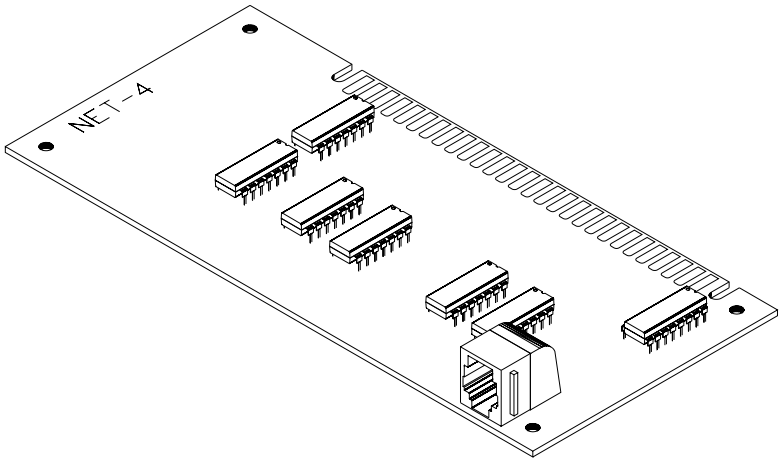


**NET-4 Communication Interface**

## NET-4 Communication Interface

The NET-4 provides the communication interface between PSR-1 remote panels and the main MXL. It is a Style 4 communication interface to the MXL RS-485 network. The NET-4 permits local annunciation of ground faults at each remote MXL panel. Ground fault detection for the network itself is provided by the MMB-1/-2 main board.

Each NET-4 connected represents one network drop on the MXL System. The total number of NET-4s permitted is 31. (The first position is always occupied by the MMB-1/-2.)

The NET-4 installs into the PSR-1 remote power supply. The PSR-1 provides all necessary power to the NET-4 through the card edge connector P7. There are no configuration switches or jumpers on the NET-4.

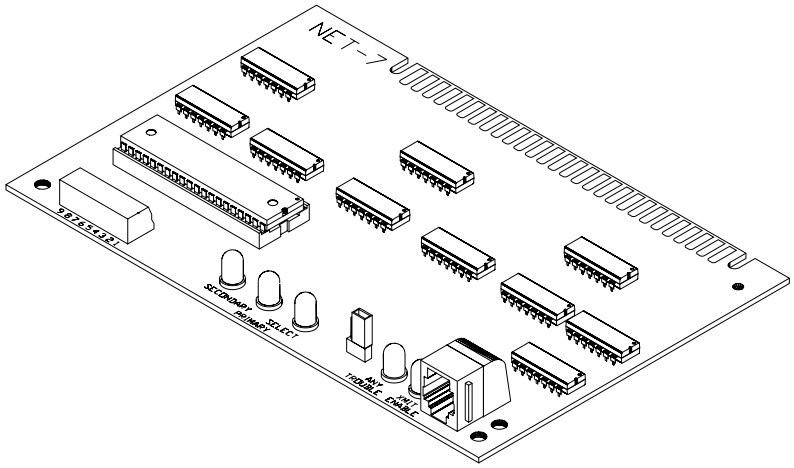


**NET-7 Communication Interface**

## NET-7 Communication Interface

The NET-7 module provides a Style 7 communication interface between the main MXL and multiple remote panels in an MXL System. Each NET-7, except the NET-7 connected to the MMB-1/-2, electrically isolates the pairs from the local power supply and isolates ground faults to a single remote panel. The MMB-1/-2 provides ground fault detection for the two pairs.

Each NET-7 connected represents one network drop on the MXL System. There can be a maximum of 32 drops including the MMB-1/-2. The NET-7 has a network address which must be set on the module and installed into the CSG-M network map.

The NET-7 offers advanced performance over the NET-4.



Technical Manuals Online! - http://www.tech-man.com

## NET-7M Communication Interface

The NET-7M provides a Style 7 communication interface between the main MXL and multiple remote panels in an MXL System using two separate RS-485 pairs. Each NET-7M, except the NET-7M connected to the MMB-1/-2, electrically isolates the pairs from the local power supply and isolates ground faults to a single remote panel. The MMB-1/-2 provides ground fault detection for the two pairs.

Each NET-7M connected represents one network drop on the MXL System. There can be a maximum of 32 drops.

**NET-7s and NET-4s cannot be combined in the same system.**

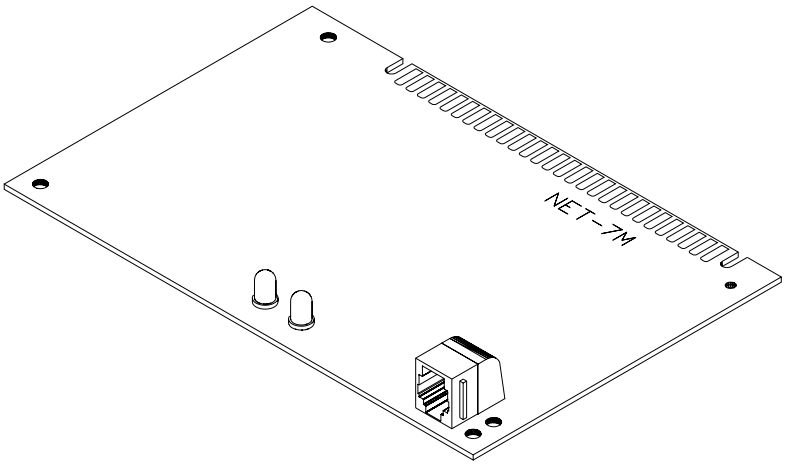


**NET-7M Communication Interface**

## NIM-1R Network Interface Module

The NIM-1R provides a new communication path for the following:

- When used as a networking interface the NIM-1R supports the connection of up to 63 MXL Systems. This new network also supports a Network Command Center (NCC) that monitors all the MXLs in the networked group. The NIM-1R supports both Style 4 and Style 7 connections. In the event of an NIM-1R communication failure, each MXL System continues to operate as a stand-alone panel.
- The NIM-1R can also be configured as an RS-232 or RS-485 two wire interface to foreign systems. This operation is called FSI (Foreign System Interface). The FSI responds to a protocol and gathers information about the MXL status. The interface supports both single MXL

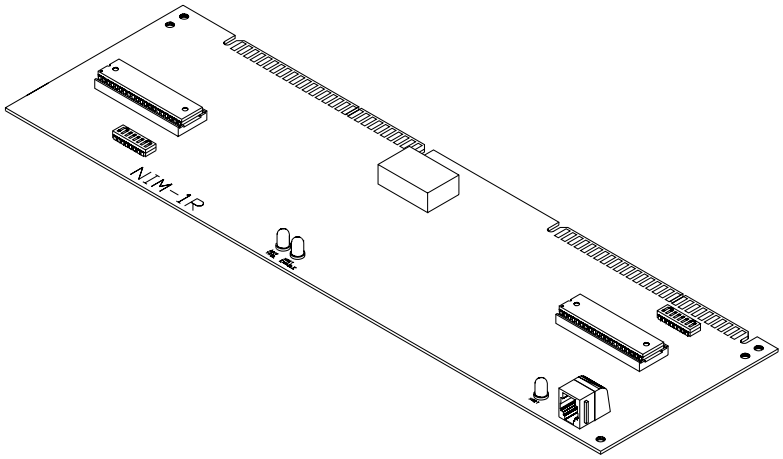


**NIM-1R Network Interface Module**



Technical Manuals Online! - http://www.tech-man.com

Systems and networked systems. Typical use of this interface is between the MXL and building management systems.

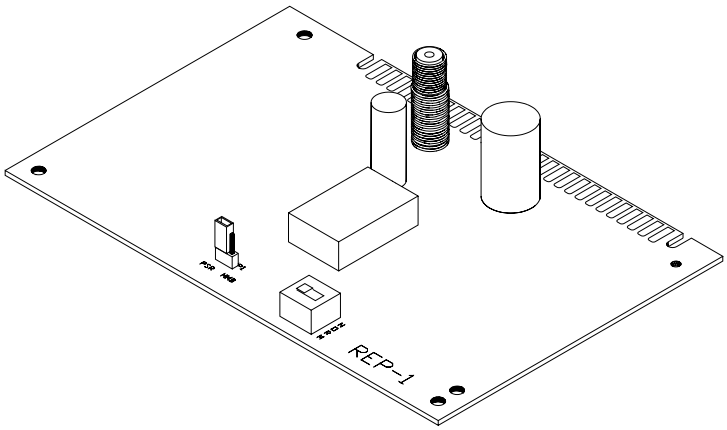


**REP-1 Network Repeater Module**

## REP-1 Network Repeater Module

The REP-1 is an MXL module that permits the user to extend the distance of the MXL RS-485 network as well as the distance of the NIM-1R RS-485 network. The REP-1 also supports both Style 4 and Style 7 wiring.

The MXL network uses an RS-485 interface for its network wiring. The RS-485 supports up to 32 nodes on each pair of wires. (A node is any location where the network wires are connected to the screw terminals of an MXL System module.) The REP-1 module reproduces the RS-485 signal on a new pair of wires. The new signal makes it possible to add more nodes to the system.

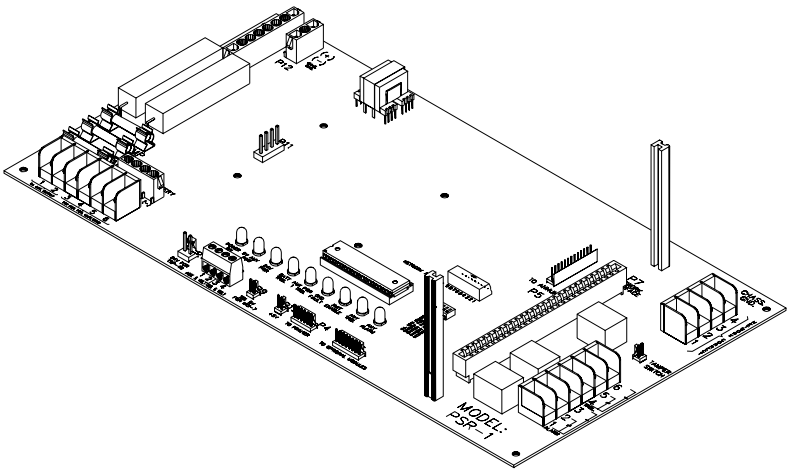


**PSR-1 Remote Power Supply**

## PSR-1 Remote Power Supply

The PSR-1 module is a microprocessor controlled remote power supply and battery charger. This module allows the basic MXL System to expand to more than 2000 points. It operates with an MPS-6/6W or MPS-12/12W to provide 6 or 12 amps of power for various MXL modules.



Technical Manuals Online! - http://www.tech-man.com

The PSR-1 module:

- Acts as an interface between remote option modules and the MXL when used with a NET-4, NET-7 or NET-7M plug-in communication module.
- Can be used to power an MOI/MOD annunciator driver set.
- Can be used as an auxiliary power supply in a stand-alone mode without an MXL.

There are nine status indicators on the PSR-1. There are also two relays used for common alarm and common trouble or, if programmed, for local alarm and local trouble.

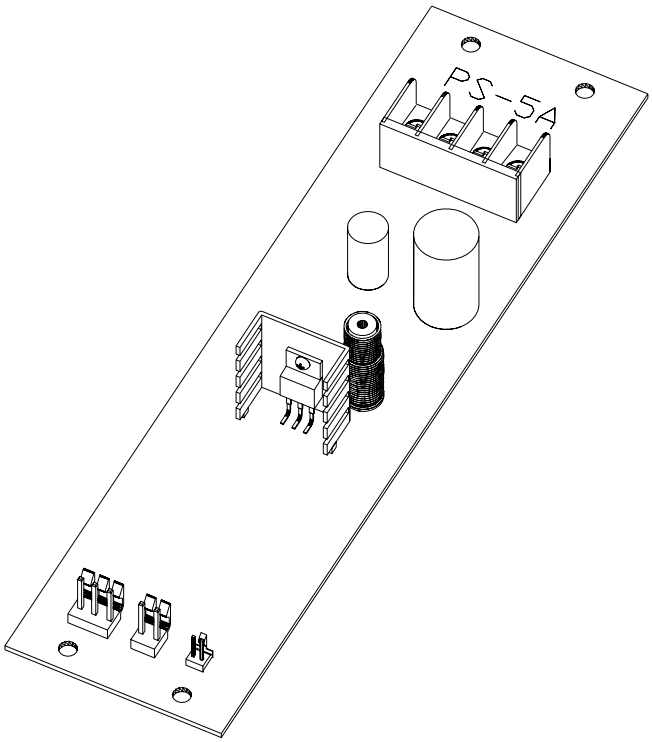


**PS-5A Power Supply**

## PS-5A Power Supply

The PS-5A is a power supply that can be used with the D2300CP or MOI-7. The power supply has enough power to run both the D2300CP and MOI-7 modules.

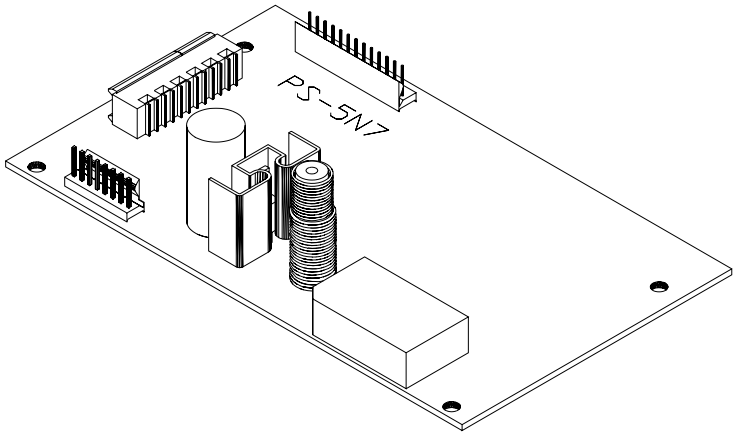


**PS-5N7 Network Interface/5V Power Supply**

## PS-5N7 Network Interface/5V Power Supply

The PS-5N7 permits remote mounting of the MXL annunciator modules MKB-1, MKB-2, and RCC-1. In addition, when the PS-5N7 is used with a PIM-1, it provides an interface for a remote printer that can be supervised or unsupervised. Each PS-5N7 occupies one network node.



Technical Manuals Online! - http://www.tech-man.com

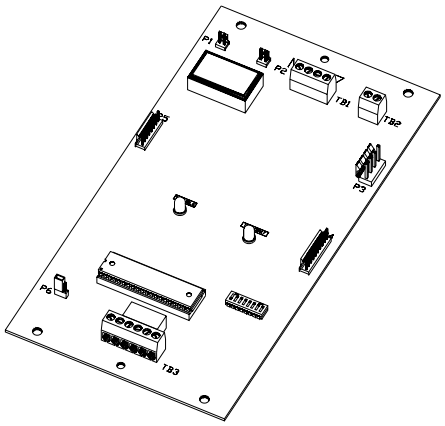


**MOI-7 Voice and Annunciator Driver**

### MOI-7 Voice and Annunciator Driver

The MOI-7 is an MXL network module that connects to a graphic annunciator using MOD-16s and MID-16s.

The MOI-7 can be connected to either Style 4 or Style 7 wiring.

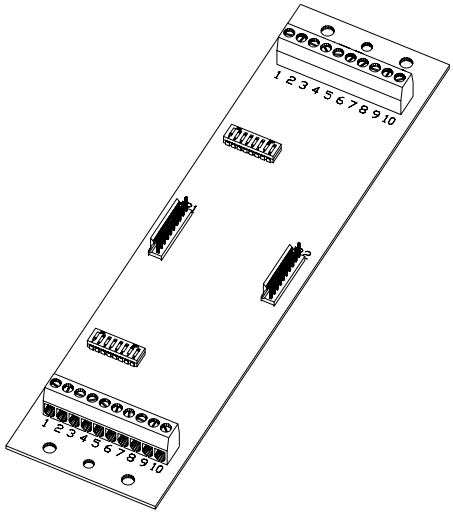


**MOD-16 Output Driver**

### MOD-16 Output Driver

The MOD-16 Output Driver module is a graphic annunciator driver controlled by the MOI-7 module. Up to eight MOD-16s can be used with an MOI-7. Each MOD-16 can activate up to 16 outputs for a total of 128 outputs.

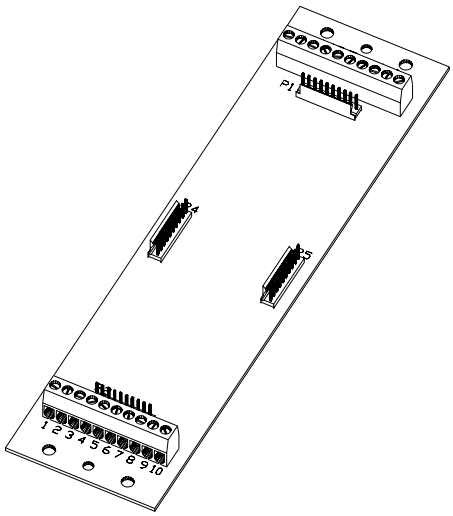


**MID-16 Input Driver**

### MID-16 Input Driver

The MID-16 module provides 16 general purpose inputs for user defined operations for the MXL.

The MID-16 is controlled by the MOI-7 module. Up to eight MID-16s can be used with an MOI-7. The function of each individual input is defined by the usage assigned to it in the CSG-M.



Technical Manuals Online! - http://www.tech-man.com

## CZM-1B6 Remote Conventional Zone Module

The CZM-1B6 is an MXL intelligent device that connects a single zone of conventional devices to an analog loop. The CZM-1B6 can power up to 15 compatible two-wire, ionization or photoelectric smoke detectors. It can also monitor an unlimited number of shorting devices such as waterflow switches, thermal detectors, manual stations, etc.

Each CZM-1B6 can be assigned a 32-character custom alphanumeric message. It also includes an alarm indicator LED which is visible through the cover plate.

The CZM-1B6 supports Style D (Class A) and Style B (Class B) wiring. The module uses one address on the analog circuit.

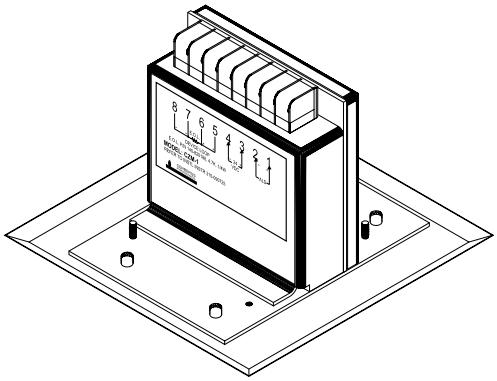

**CZM-1B6 Remote Conventional Zone Module**

## PIM-1 Peripheral Interface Module

The PIM-1 module is an interface for an MXL/MXLV System to remote peripheral devices such as printers, VDTs, and CRTs. It connects an RS-232C device or CRT to an MXL/MXLV System without the peripheral devices protective ground causing a ground fault. The interface operates at up to 9600 baud without losing any characters.

Mounting the PIM-1 in the MME-3 in the upper right-hand corner provides an isolated RS-232C port for an RS-232C printer when used with an MXL/MXLV System. The PIM-1 bidirectional interface supports a supervised or non-supervised printer, a CRT, or a VDT. Do not use a non-supervised printer for an NFPA 72 Proprietary or UL 1076 system. For NFPA 72 Local, any EDP UL listed equipment may be used.

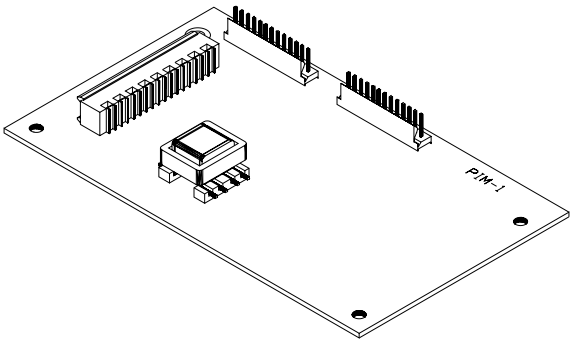


**PIM-1 Peripheral Interface Module**



Technical Manuals Online! - http://www.tech-man.com

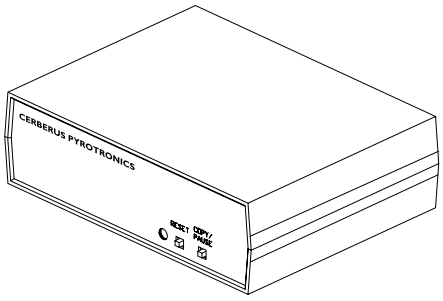


**PIM-2 Peripheral Interface Module**

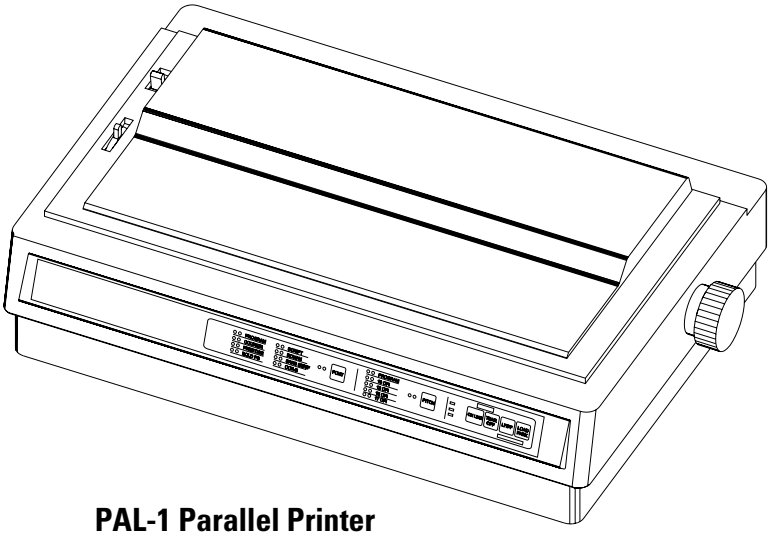

**PAL-1 Parallel Printer**

## PIM-2 Peripheral Interface Module and PAL-1 Parallel Printer

The PIM-2 module is an interface that allows the connection of UL listed EDP parallel printers to the MXL and CXL Systems. It converts the RS-232C (serial) printer outputs of these two systems to a Centronics parallel interface.

When used with the PAL-1, the PIM-2 provides a supervised parallel printer (NFPA 72 Proprietary) for any one of the systems listed above. However, this configuration is not supervised for data integrity. For NFPA 72 Local any EDP UL listed equipment may be used.

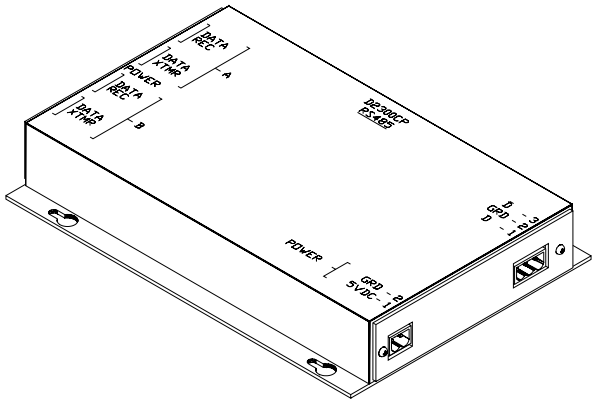


**D2300CP Fiber Optic Interface**

## D2300CP Fiber Optic Interface

The D2300CP is a Fiber Optic interface for the MXL's RS-485 network, MNET or XNET. It uses a two-fiber (Duplex) pair between each device. The D2300CP can function as either a repeater or an end point unit.

The D2300CP can operate in either a daisy chain or star configuration. This allows for network configurations that are not possible with the RS-485 network alone.

**WARNING:**
The D2300CP module is not listed for use by Factory Mutual. Applications requiring fiber connectivity of voice modules/systems are therefore not listed.



Technical Manuals Online! - http://www.tech-man.com

## Silent Knight Model 5128/5129 Digital Fire Communicator

The MXL reports system conditions to a Central Station using the Silent Knight Model 5128/5129, a four-channel digital communicator that reports alarm, trouble, supervisory, and miscellaneous status. When used with the MXL, the Silent Knight Model 5128/5129 uses the alarm, trouble, and supervisory channels. The miscellaneous status channel may be used to annunciate conditions other than fire at the Central Station.

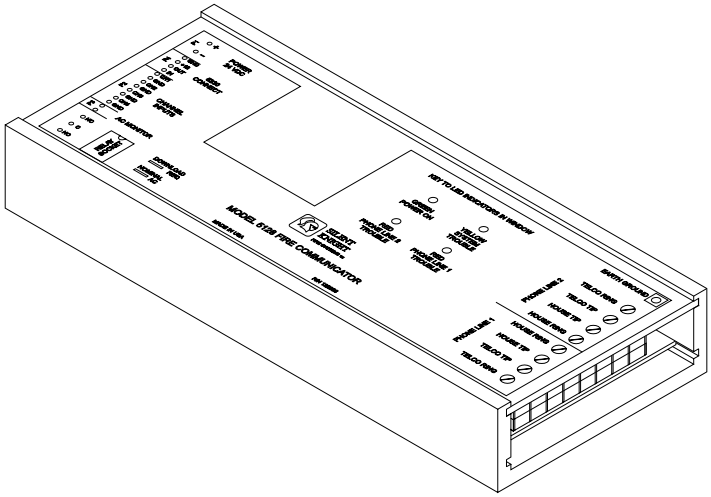


**Silent Knight Model 5128/5129 Digital Fire Communicator**



Technical Manuals Online! - http://www.tech-man.com

# The Voice System (MXLV)

This MXLV was constructed to your specifications based on your organization's needs and may not include all of the features possible on a fully loaded MXLV System. Use the table of contents to find the instructions applicable to the features on your system.

## Overview of the Voice System

The MXLV is an emergency audio and optional firefighters' telephone package that is fully integrated into the MXL System. In a multisystem network, the MXLV supports selective paging from a master command console to remote voice systems. This permits individual voice systems to be connected to the local MXL while still being controlled from the voice command console at the master MXL.

The MXLV supports up to three channels of simultaneous audio. In any channel configuration, the microphone channel can be used to provide a tone or message to any zone. Only one tone, message, or announcement may be routed to the same speaker zone at one time. A priority sequence, called PAGE, EVACUATE, ALERT, and OTHER, controls which signal the zone receives (See ***The Four Categories of Sound, Chapter 3 - Operation*** for a discussion of these priorities).

## Capacity of the System

The system supports over 100 zones which can be split between speaker, telephone, and strobe zone addresses. MXL, with remote "transponder" units, supports the use of multiple command consoles located in remote buildings. The system can then be configured to support all-call paging of remote buildings from a central location.

## System Options

- *Firefighters' Telephone System,* including a *Master Telephone* used with firefighters' telephones
- *Telephone-Busy Tone* and *Dial Tone*
- *Warden's Page* that allows any on-line telephone to act as a paging microphone
- *Annunciator Modules*
- *Transponder*
- *Strobe Circuits*
- *Remote Command Stations*



Technical Manuals Online! - http://www.tech-man.com

The following modules are required to integrate voice into the MXL.

## ACM-1 Audio Control Module

The ACM-1 Audio Control module is the master control module for the MXLV audio system.

The ACM-1 has a supervised tone generator which provides a variety of tones for use with the system. Each system can have two of the available tones.

There is a microphone preamplifier circuit with backup preamplifier which controls the volume of any sound that comes into the circuit. The module also has a circuit that monitors the microphone key. Both the preamplifier circuit and the retractable cord are supervised. The ACM-1 also controls a small local speaker in the MMM-1 module.

Three supervised riser circuits provide low power audio signals to the OCC-1 to be sent to power amplifiers.

The Audio Control module communicates with the VSM-1 Voice Switch modules, the VLM-1 Voice LED modules and the VFM-1 Voice Fan Control modules that are part of the system. The VSM-1 modules provide firefighters with a means of controlling nonautomatic functions of the MXLV System.

The ACM-1 controls the warden's page that comes from the TMM-1 Telephone Master module. When activated, the warden's page becomes the audio source for selected speaker zones.

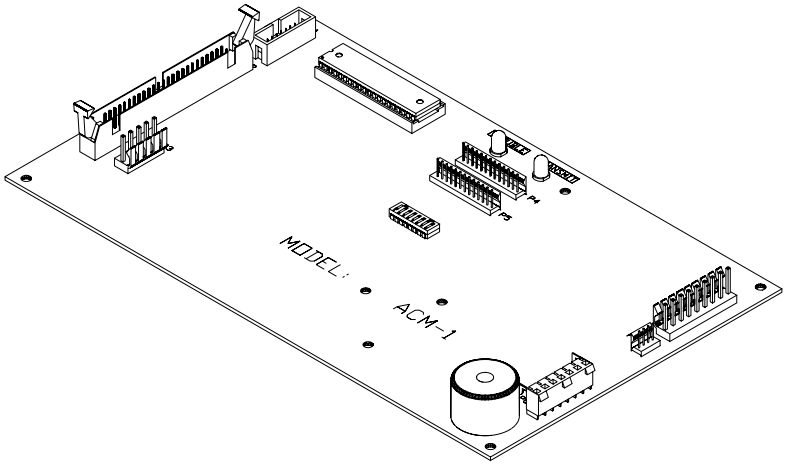


**ACM-1 Audio Control Module**



Technical Manuals Online! - http://www.tech-man.com

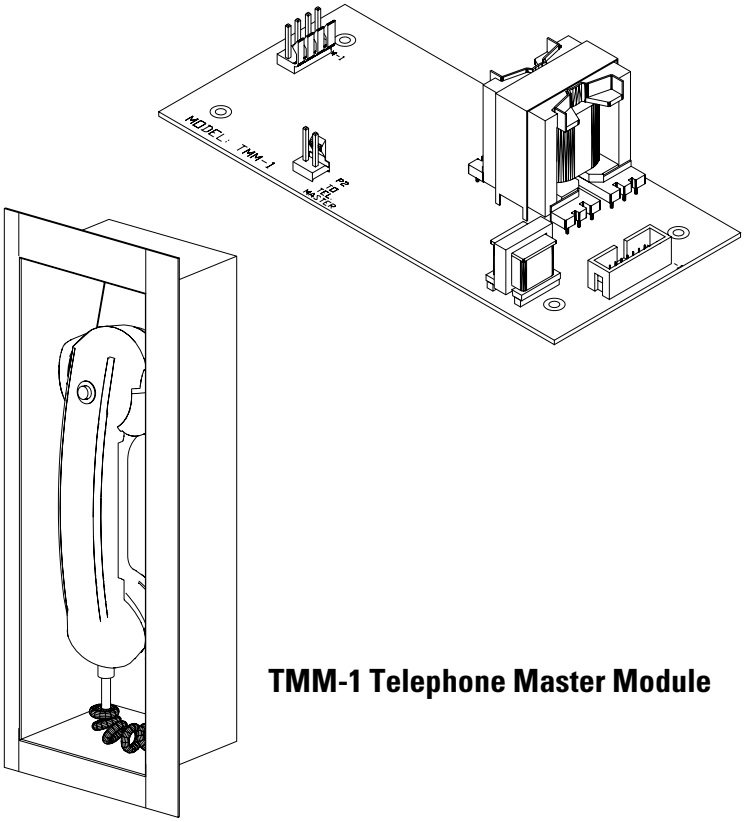


**TMM-1 Telephone Master Module**

## TMM-1 Telephone Master Module

The optional TMM-1 Telephone Master module provides firefighters with an emergency telephone system for communications with remote locations. The TMM permits five telephones to be off-hook at the same time with almost no loss of quality in the sound. This module also has a warden's page feature that permits paging through the speaker zones from the master telephone as well as from remote locations.

The push-to-talk button on the TMM-1 Telephone Master module connects the red master telephone to the MXLV System through the telephone riser. It also provides the signal for the warden's page.

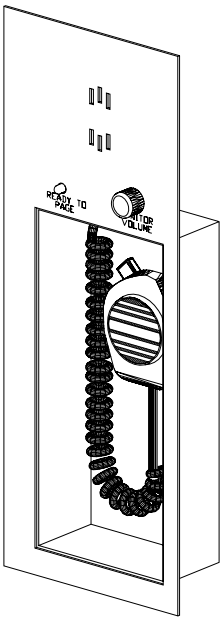


**MMM-1 Microphone Master Module**

## MMM-1 Microphone Master Module

The MMM-1 Microphone Master module provides firefighters with a means of sending Voice messages to the audio zones specified. The MMM-1 module has a push-to-talk switch on the microphone, as well as a retractable coiled cord. Both are supervised.

A green LED on the MMM-1 indicates when all selected zones are ready to be paged.

## VSM-1 Voice Switch and LED Module

The VSM-1 Voice Switch module provides the system operator with manual control and annunciation of the MXLV System functions. Each VSM-1 has eight push-button switches; each



Technical Manuals Online! - http://www.tech-man.com

push-button switch has two LEDs to indicate its status, for a total of 16 LEDs. A label next to each switch indicates the switch's programmed usage.

Use the VSM-1 to manually select speaker, telephone, or strobe zones, as well as a wide range of general system functions, such as ALL CALL, ALL EVAC, Warden's Page, and Local Speaker. Switch use and zone groupings are assigned in the CSG-M.

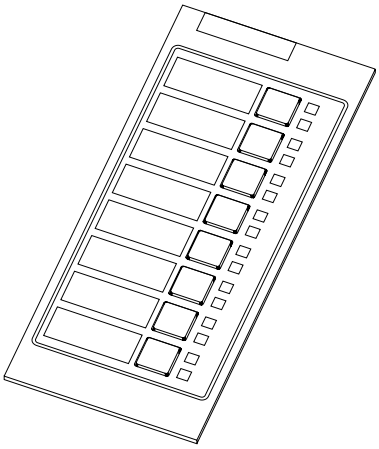

**VSM-1 Voice Switch and LED Module**

## VLM-1 Voice LED Module

The VLM-1 Voice LED module provides LED annunciation of system activity. Each VLM-1 module contains eight groups of two LEDs in three different colors to indicate a variety of system information, such as zone trouble or alarm. Eight LEDs are either red or green, the remainder are yellow. A label next to each pair of LEDs indicates its programmed use in the CSG-M.

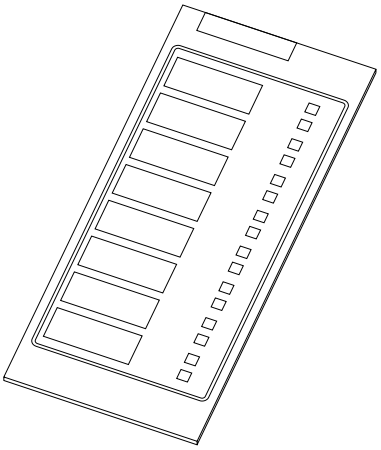

**VLM-1 Voice LED Module**

## VFM-1 Fan Control Module

VFM-1 Fan Control module provides the system operator with automatic and manual control and annunciation of MXLV fan control functions for building management. Each VFM-1 has four three-position rotary switches with fan control functions assigned to each of them in the CSG-M. Each rotary switch has three LEDs to indicate function and trouble status for a total of 12 LEDs. A label next to each switch indicates the switch's programmed usage.

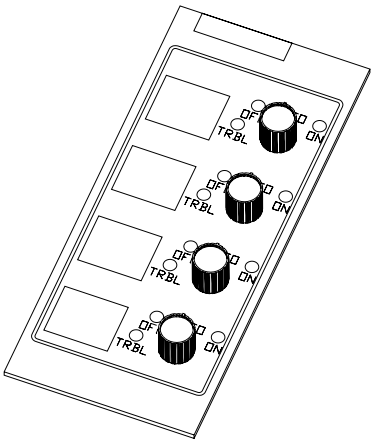


**VFM-1 Voice Fan Module**



Technical Manuals Online! - http://www.tech-man.com

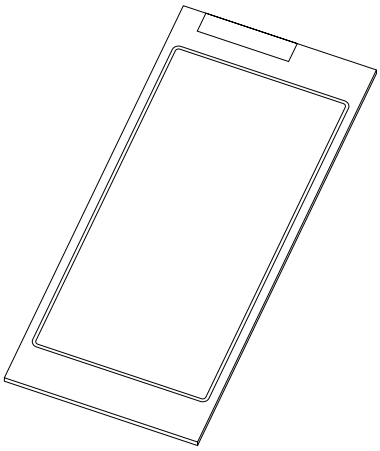

VSB-1 Voice Switch Blank Plate

### VSB-1 Voice Switch Blank Plate

The VSB-1 Voice Switch Blank Plate is a blank plate used to fill in any empty spaces on the MHD panel.

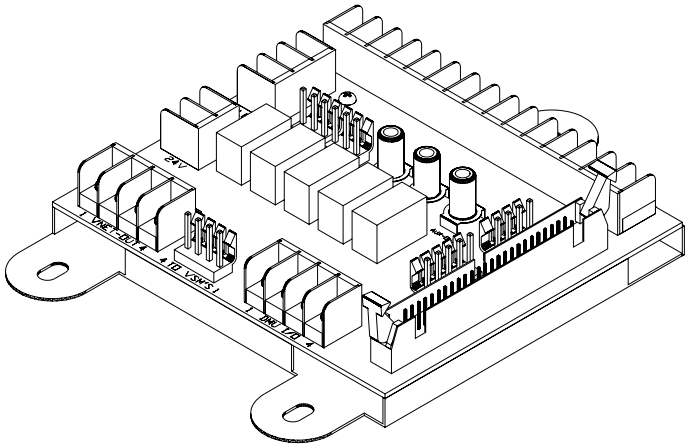


TBM-2 Termination Block Module

### TBM-2 Termination Block Module

The TBM-2 is the central connection point for audio functions in the MXLV System. The ACM-1 Audio Control module communicates with other modules in the system through the TBM-2.

In addition, the TBM-2 has connections for the recording of telephone and microphone messages, and the control connections to activate recording equipment.

### OMM-1 Output Master Module

The OMM-1 Output Master module is the card cage for all of the MXLV plug-in boards: the OCC-1, ASC-1/-2, ZAC-30, DMC-1, RCM-1, PLC-4 and ZC zone cards. The module has the same dimensions as the MOM-4 MXL card cage. The OMM-1 mounts vertically in the MME-3 enclosure and contains four half-width card slots with card guides.

All field wiring terminates on the OMM-1 terminal blocks. Power and network communications are provided



Technical Manuals Online! - http://www.tech-man.com

by the MMB-1/-2 or the PSR-1, depending on the application. The network control signals are distributed to the plug-in boards through the OMM-1. All connecting cables are supplied with the unit.

Up to three OMMs or MOMs fit into a single MME-3 enclosure. No more than three OMMs can be connected together, or, when a TSP-40 printer is used, no more than two OMMs or MOMs can be connected.

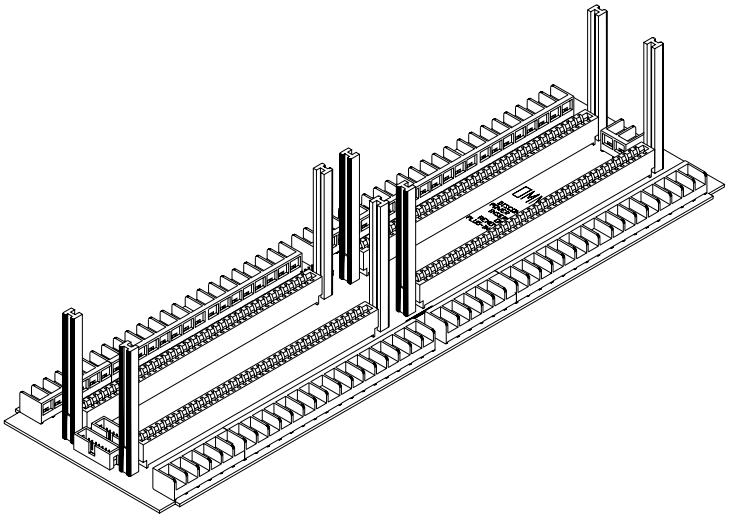

**OMM-1 Output Master Module**

## OMM-2 Output Master Module

The OMM-2 is the card cage for any two half-width (OCC-1, ASC-1/-2, ZAC-30, DMC-1, PLC-4 or ZC zone cards) or one full-width (RCM-1) MXLV plug-in boards. The module has the same dimensions as the MOM-2 MXL card cage. The OMM-2 mounts vertically in the MME-3 enclosure.

Voice system field wiring terminates on the OMM-2 terminal blocks. Power and network communications are provided by the MMB-1/-2 or the PSR-1, depending on the application. The network control signals are distributed to the plug-in cards through the OMM-2. All connecting cables are supplied with the unit.

The MME-3 Voice System enclosure has three locations for the OMM-2 (or for OMM-1s, MOM-4s or MOM-2s). However, when a TSP-40 printer is installed in a system, it decreases the number of OMMs (or MOMs) to two modules a system.

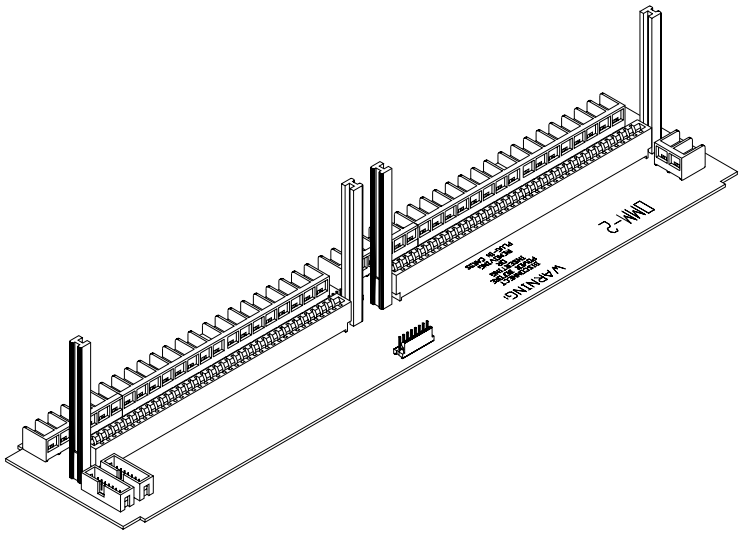

**OMM-2 Output Master Module**



Technical Manuals Online! - http://www.tech-man.com

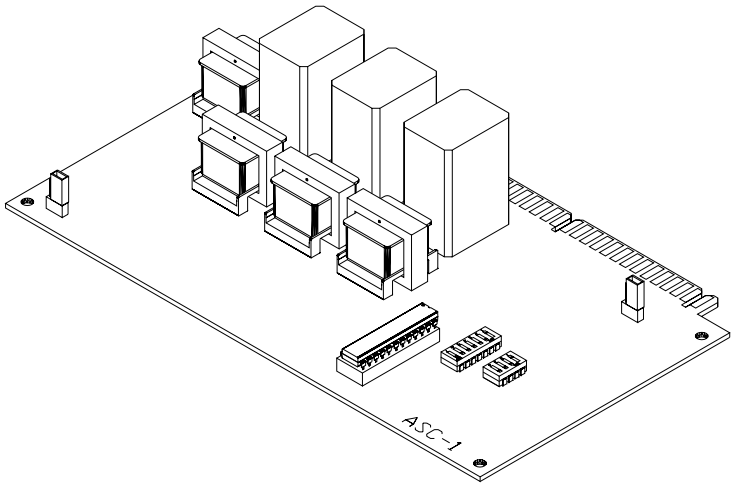


**ASC-1 Amplifier Supervision and Backup Card**

### ASC-1 Amplifier Supervision and Backup Card

The ASC-1 Amplifier Supervision card supervises the outputs of up to three primary amplifiers and one backup amplifier by comparing the amplifier output to the amplifier input that is available on the OMM-1/-2 Output Master module. A trouble is indicated on the MKB-2 if they do not match.

If the primary amplifier fails, the ASC-1 switches the following:

- the input signal for the failed amplifier to the backup amplifier, and
- the backup amplifier output to the audio channel formerly served by the failed amplifier.

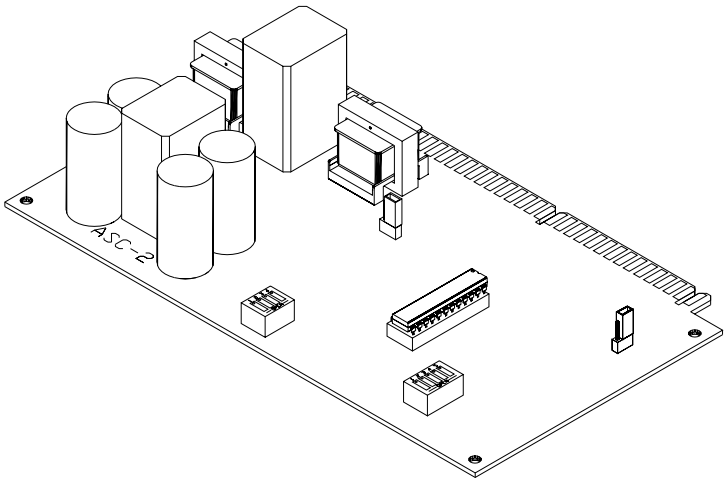


**ASC-2 Amplifier/Riser Supervision and Backup Card**

### ASC-2 Amplifier/Riser Supervision and Backup Card

The ASC-2 Audio Supervision card supervises the output of one primary amplifier and one backup amplifier in an MXLV System. The ASC-2 compares the amplifier output to the amplifier input from the OMM-1/-2. If they do not match, a trouble indicates on the MKB-2. The supervised output may be connected in Style Y (Class B) or Style Z (Class A). The audio output can be connected to the ZC zone card series or ICP-B6.

If the primary amplifier fails, the ASC-2 switches the following:

- the input signal for the failed amplifier to the backup amplifier, and
- the backup amplifier output to the audio channel formerly served by the failed amplifier.



Technical Manuals Online! - http://www.tech-man.com

## OCC-1 Output Control Card

The OCC-1 Output Control Card is an MXLV module that controls voice system cards (such as the zone cards) that plug into the OMM-1/-2 Output Master module. Commands received from the MXL System through the network bus are processed by the OCC-1. The commands are then sent to the other cards in the system for implementation.

At least one OCC-1 is required in each MXLV System. It supervises and controls up to 11 plug-in cards, each having a unique subaddress.

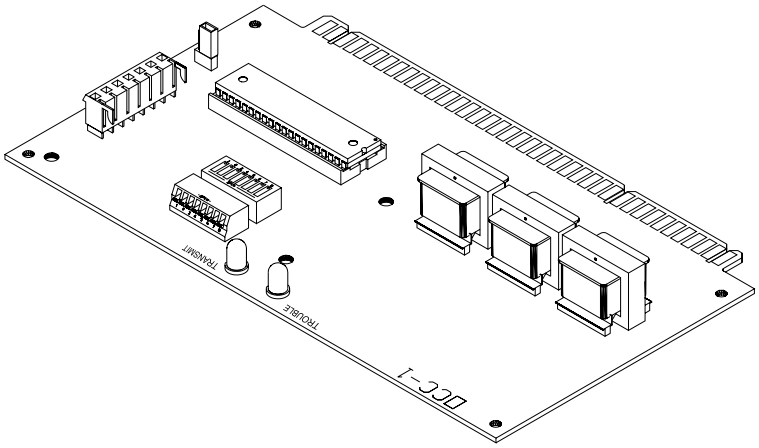


**OCC-1 Output Control Card**

## BTC-1 Backup Tone Card

The BTC-1 Backup Tone Card provides two tones for the MXLV System that can be selected by DIP switches. This card can be installed on top of the ACM-1 to provide backup of the two primary tones should the tone generator of the ACM-1 fail. The BTC-1 can also be installed on the OCC-1 Output Control Card module to provide a degrade tone when the OCC-1 loses communication with the MMB-1/-2.

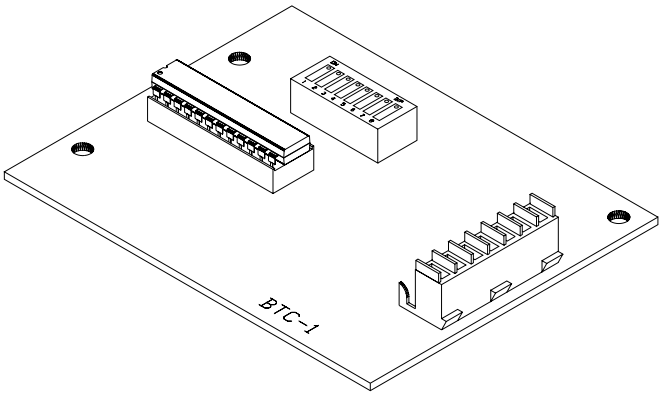


**BTC-1 Backup Tone Card**



Technical Manuals Online! - http://www.tech-man.com

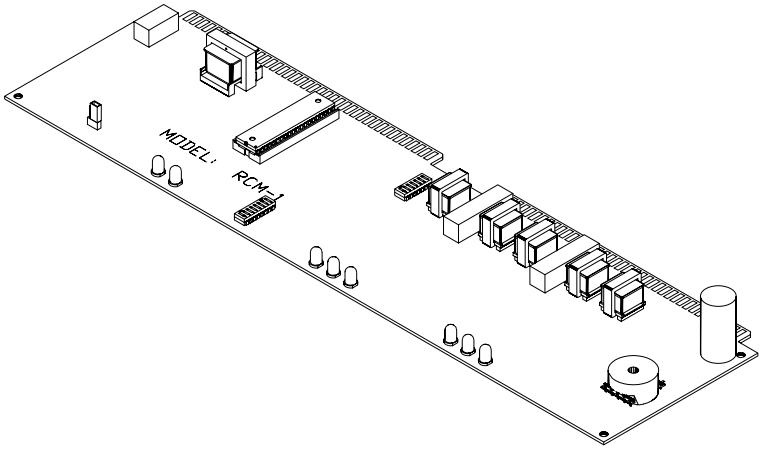


**RCM-1 Riser Control Module**

## RCM-1 Riser Control Module

The RCM-1 Riser Control module provides control and supervision of global paging risers in MXL voice networks. The RCM-1 is a double-width card and has 4 ports with the following inputs and outputs:

| PORT | STYLE | FUNCTION |
|---|---|---|
| A | 6 | Audio signal input |
| B | 4/7 | Audio signal input/output |
| C | 4 | Audio signal output |
| D | 6 | Audio signal output |

The RCM-1 supervises Port B for open and short circuits, reports by exception to each MXL, and isolates the fault.

Only one RCM-1 may be connected to each MXL. The module communicates with the MXL using the RS-485 MNET. If the RCM-1 detects that communication is lost with the MXL, it will automatically switch to Local Mode.

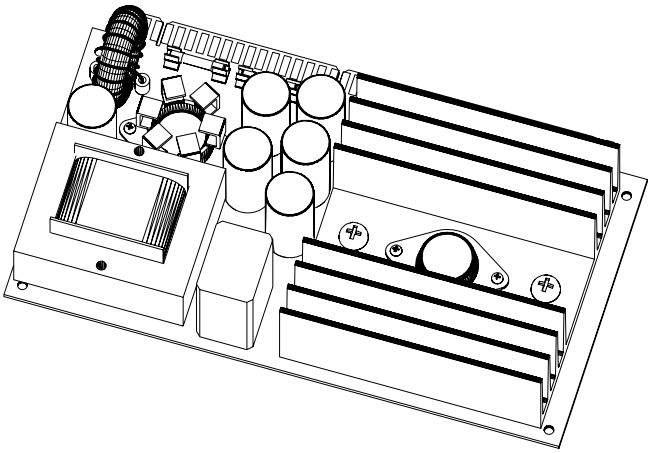

**ZAC-30 Zone Amplifier Card**

## ZAC-30 Zone Amplifier Card

The ZAC-30 Zone Amplifier Card is a 30 watt module that plugs into a slot on the OMM-1/-2 card cage. It supervises the audio amplification and its on-board speaker zone.

The MXLV System controls the input to the ZAC-30 through the OCC-1 from one of up to three audio channels. The amplifier output is switch selectable for either 25.2V RMS or 70.7V RMS.

The ZAC-30 has one power limited speaker zone that is controlled by the MXLV System. The zone may be wired in either an NFPA Style Y (Class B) or Style Z (Class A) configuration. The 30 watt output may also be configured as two 15 watt Style Y (Class B) zones (split zone).



Technical Manuals Online! - http://www.tech-man.com

The ZAC-30 may be used as either a primary or a backup amplifier. Each ZAC-30 supervises itself only. Up to four primary ZAC-30s can be backed up by one ZAC-30. Only the first primary amplifier that fails is replaced by the backup amplifier.

If the primary amplifier fails:

- The input signal is switched from the failed amplifier to the backup.
- The backup amplifier switches the audio output to the audio zone formerly served by the failed amplifier.

The ZAC-30 occupies one of eleven subaddresses of the OCC-1.

## DMC-1 Digital Message Card

The Digital Message Card provides digitized voice messages for the EVAC and ALERT channels in place of tones. The DMC-1 has a library of factory recorded phrases which the user may configure to form messages using the CSG-M. The user may also record custom phrases into the DMC-1 using a microphone or tape recorder.

Up to two primary DMC-1 cards may be used in an MXLV System. Up to three additional DMC-1 mirror modules (DMC-1MRs) may be installed (one DMC-1 mirror module per one ACM-1 mirror module). DMC-1 and DMC-1MR cards are installed in the same way.

The DMC-1 continually supervises itself. In case of a problem, the module sends a trouble message to the MMB-1/-2 and a separate backup tone generator operates in its place.

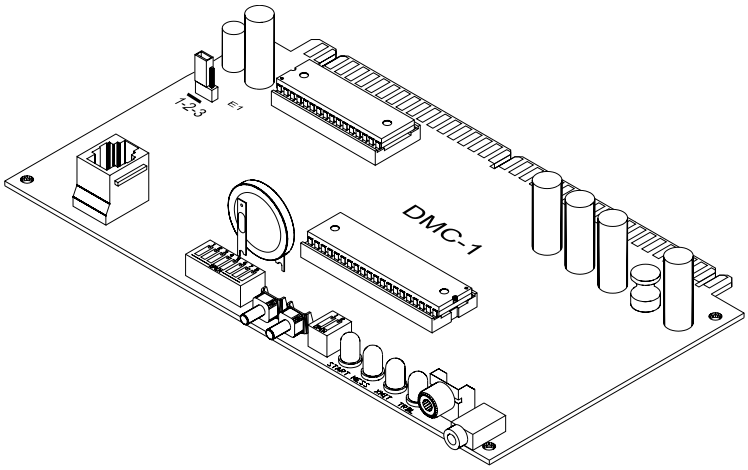


**DMC-1 Digital Message Card**



Technical Manuals Online! - http://www.tech-man.com

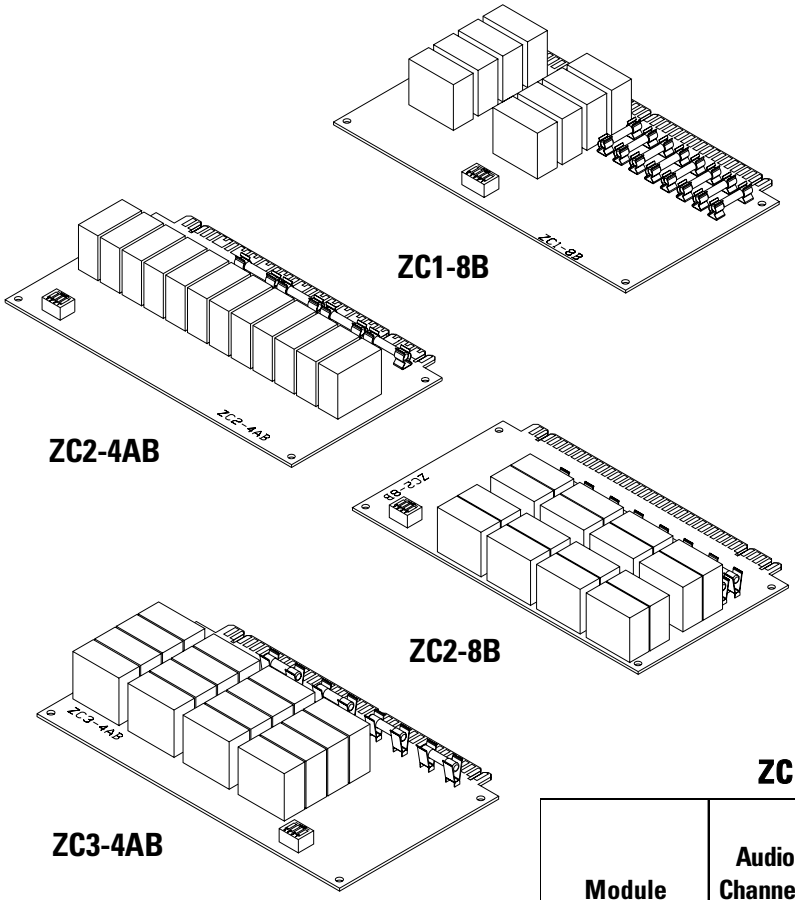


ZC Zone Control Card Modules

## ZC Zone Control Card Modules

The Zone Control Card modules provide a variety of audio/strobe input channels and audio/strobe output zones which enable the user to configure the system to suit the specifications. All output zones are supervised, power limited (with PLC-4 only), and protected by fuses. The zone style is either Class A (Style Z) or Class B (Style Y), depending on the module selected. The following table contains the characteristics of all the zone control cards.

### ZC ZONE CONTROL CARDS

| Module | Audio Channels | Audio Outputs | Zone Style | Audio Input/Output Rating | Use |
|---|---|---|---|---|---|
| ZC1-8B with 25V fuses | 1 | 8 | Style Y | 25V RMS | Speaker and/or strobe |
| ZC1-8B with 70V fuses | 1 | 8 | Style Y | 70.7V RMS | Speaker only |
| ZC2-8B with 25V fuses | 1 or 2 | 8 | Style Y | 25V RMS | Speaker or strobe |
| ZC2-8B with 70V fuses | 1 or 2 | 8 | Style Y | 70.7V RMS | Speaker only |
| ZC2-4AB with 25V fuses | 1 or 2 | 4 | Style Y or Z | 25V RMS | Speaker or strobe |
| ZC2-4AB with 70V fuses | 1 or 2 | 4 | Style Y or Z | 70.7V RMS | Speaker only |
| ZC3-4AB with 25V fuses | 1,2, or 3 | 4 | Style Y or Z | 25V RMS | Speaker or strobe |
| ZC3-4AB with 70V fuses | 1,2, or 3 | 4 | Style Y or Z | 70.7V RMS | Speaker only |



Technical Manuals Online! - http://www.tech-man.com

## ZCT-8B Zone Card Telephone

The ZCT-8B Zone card supports eight Class B telephone zones with dial and busy tone features. Each zone is supervised for open and short trouble conditions. Up to five telephones can be on line at the same time with no loss of quality.

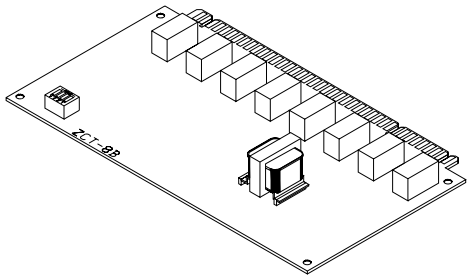


**ZCT-8B Zone Control Telephone Card Module**

## PLC-4 Power Limiting Module

The PLC-4 and its associated PL864 plug-on boards limit the power of the MXLV System to comply with UL-864. There are three different PL864 boards that can plug onto the four slots of the PLC-4:

- the PL864-25A
- the PL864-70A
- the PL864-25S

The PL864-25A and the PL864-70A plug onto the PLC-4 to limit power to audio circuits. The PL864-25S plugs onto the PLC-4 to limit power to strobe circuits.

> **NOTE:** Use the PL-864S for strobe circuits only. Using the PL-864S for audio circuits may damage the system. Use the PL864-70A for 70.7V audio circuits only.

The PLC-4 plugs onto one of the OMM card edge connectors. A single PLC-4 with four PL864 plug-on boards can serve up to four audio and/or strobe circuits.

The PLC-4 and PL864-25A/70A audio cards do not supervise themselves. However, since all audio power to the MXLV System passes through them, signal losses appear as troubles for the ASC-1/-2 modules.

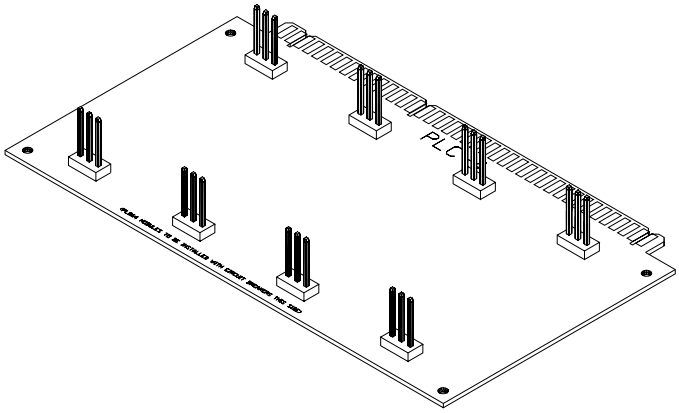


**PLC-4 Power Limiting Module**

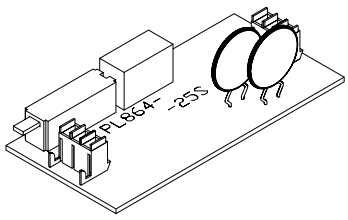


**PL864-25S Plug-on Board**



Technical Manuals Online! - http://www.tech-man.com

The PL864-25S card supervises strobe power with a relay that gives a contact closure. The relay contact connects to the OCC-1, terminals 15 and 16, on the OMM position dedicated to the PLC-4. The system announces a failure as a strobe power loss.

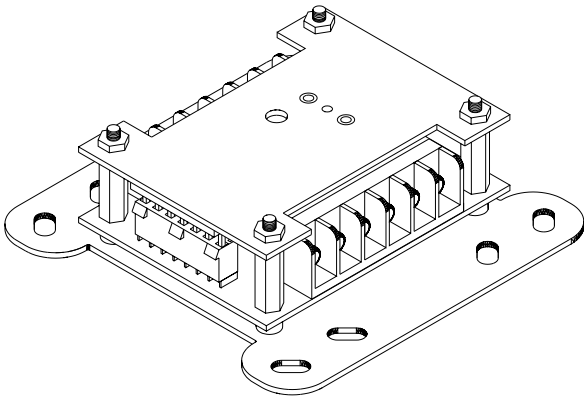

**ICP-B6 Intelligent Control Point**

### ICP-B6 Intelligent Control Point

The Model ICP-B6 can be used as an independent, remotely located telephone zone, speaker zone (25V or 70.7V RMS), or notification appliance circuit (NAC), depending on how it is configured. It communicates through the analog loop of the MXL System.



Technical Manuals Online! - http://www.tech-man.com

# Analog Addressable Devices

### FP-11 Intelligent/Analog Photoelectric Detector [1]

The FP-11 is an intelligent/analog photoelectric detector that can be used as an area or duct detector [FP-11(d)]. It uses either a DB-11 low profile mounting base or DB-3S mounting base with the DB-ADPT adapter, a DB-X11RS mounting base with relay or DB-X3RS mounting base with relay with the DB-ADPT adapter, an ADBI-60 audible base with the DB-ADPT adapter, or an AD-11P or AD-11XPR air duct housing. The FP-11 requires MXL Rev 10.0 or higher firmware.

### FPT-11 Intelligent Thermal Detector

The FPT-11 is an intelligent/analog rate-compensated/fixed-temperature type thermal and photoelectric detector. It can only be used as an area detector. It uses either a DB-11 low profile mounting base or DB-3S mounting base with the DB-ADPT adapter, a DB-X11RS mounting base with relay or DB-X3RS mounting base with relay with the DB-ADPT adapter, or an ADBI-60 audible base with the DB-ADPT adapter. The FPT-11 requires MXL Rev. 10.0 or higher firmware.

### ID-60P Intelligent/Analog Photoelectric Detector [1]

The ID-60P is an intelligent/analog photoelectric detector that can be used as an area or duct detector [ID-6OP(d)]. It uses either a DB-3S low profile mounting base, a DB-X3RS mounting base with relay, an AD-3P duct housing, or an ADBI-60 audible base.

### ID-60PT Intelligent/Analog Photoelectric Detector with Heat Sensor [1]

The ID-60PT is an intelligent/analog rate-compensated/fixed-temperature type thermal and photoelectric detector. It can only be used as an area detector. It uses either a DB-3S low profile mounting base, a DB-X3RS mounting base with relay, or an ADBI-60 audible base.

### ID-60I Intelligent/Analog Ionization Detector [1]

The ID-60I is an intelligent/analog ionization detector for use in open areas at altitudes of 0 to 4000 feet. It uses either a DB-3S low profile mounting base, a DB-X3RS mounting base with relay, or an ADBI-60 audible base.

### ID-60IH Intelligent/Analog Ionization High Altitude Detector [1]

The ID-60IH is an intelligent/analog ionization detector for use in open areas at altitudes of 3000 to 8000 feet. It uses either a DB-3S low profile mounting base, a DB-X3RS mounting base with relay, or an ADBI-60 audible base.

### ID-60IA Intelligent/Analog Ionization High Air-Velocity Detector [1]

The ID-60IA is an intelligent/analog ionization high air-velocity detector for use in open areas, computer facilities, and air ducts at altitudes of 0 to 4000 feet, with air velocities of 0 to 1200 feet per minute. It uses either a DB-3S low profile mounting base, a DB-X3RS mounting base with relay, or an ADBI-60 audible base.

NOTES

1. Refer to Appendix F, Envirolink
2. Refer to Appendix I, Application Specific Detection (ASD)



Technical Manuals Online! - http://www.tech-man.com

### ID-60IAH Intelligent/Analog Ionization High Air-Velocity, High Altitude Detector [1]

The ID-60IAH is an intelligent/analog ionization high air-velocity, high altitude detector for use in open areas, computer facilities, and air ducts at altitudes of 3000 to 8000 feet, with air velocities of 0 to 1200 feet per minute. It uses either a DB-3S low profile mounting base, a DB-X3RS mounting base with relay, or an ADBI-60 audible base.

### ID-60IB Intelligent/Analog Ionization Air-Duct Detector [1]

The ID-60IB is an intelligent/analog ionization detector for use in air duct applications at altitudes of 0 to 4000 feet, with air velocities of 500 to 4000 feet per minute. It uses either the AD-3I or AD-3XRI housing.

### ID-60IBH Intelligent/Analog Ionization Air-Duct High Altitude Detector [1]

The ID-60IBH is an intelligent/analog ionization detector for use in air duct applications at altitudes of 3000 to 8000 feet, with air velocities of 500 to 4000 feet per minute. It uses either the AD-3I or AD-3XRI housing.

### ID-60T-135 Intelligent Thermal Detector

The ID-60T-135 is an intelligent rate-compensated/fixed-temperature type thermal detector. It uses either a DB-3S low profile mounting base, a DB-X3RS mounting base with relay, or an ADBI-60 audible base.

### ILP-1 Intelligent/Analog Photoelectric Detector [1]

The ILP-1 is an intelligent/analog photoelectric detector that can be used as an area or duct detector [ILP-1(d)]. It uses either a DB-3S low profile mounting base, a DB-X3RS mounting base with relay, an AD-3ILP or AD-3XRILP duct housing, or an ADBI-60 audible base.

### ILPT-1 Intelligent/Analog Photoelectric Detector with Heat Sensor [1]

The ILPT-1 is an intelligent/analog rate-compensated/fixed-temperature type thermal and photoelectric detector. It can only be used as an area detector. It uses either a DB-3S low profile mounting base, a DB-X3RS mounting base with relay, or an ADBI-60 audible base.

### ILI-1 Intelligent/Analog Ionization Detector [1]

The ILI-1 is an intelligent/analog ionization detector for use in open areas at altitudes of 0 to 4000 feet. It uses either a DB-3S low profile mounting base, a DB-X3RS mounting base with relay, or an ADBI-60 audible base.

### ILI-1H Intelligent/Analog Ionization High Altitude Detector [1]

The ILI-1H is an intelligent/analog ionization detector for use in open areas at altitudes of 3000 to 8000 feet. It uses either a DB-3S low profile mounting base, a DB-X3RS mounting base with relay, or an ADBI-60 audible base.

NOTES

1. Refer to Appendix F, Envirolink
2. Refer to Appendix I Application Specific Detection (ASD)



Technical Manuals Online! - http://www.tech-man.com

### ILI-1A Intelligent/Analog Ionization High Air-Velocity Detector [1]

The ILI-1A is an intelligent/analog ionization high air-velocity detector for use in open areas, computer facilities, and air ducts at altitudes of 0 to 4000 feet, with air velocities of 0 to 1200 feet per minute. It uses either a DB-3S low profile mounting base, a DB-X3RS mounting base with relay, or an ADBI-60 audible base.

### ILI-1AH Intelligent/Analog Ionization High Air-Velocity, High Altitude Detector [1]

The ILI-1AH is an intelligent/analog ionization high air-velocity, high altitude detector for use in open areas, computer facilities, and air ducts at altitudes of 3000 to 8000 feet, with air velocities of 0 to 1200 feet per minute. It uses either a DB-3S low profile mounting base, a DB-X3RS mounting base with relay, or an ADBI-60 audible base.

### ILI-1B Intelligent/Analog Ionization Air-Duct Detector [1]

The ILI-1B is an intelligent/analog ionization detector for use in air duct applications at altitudes of 0 to 4000 feet, with air velocities of 500 to 4000 feet per minute. It uses either the AD-3I housing or the AD-3XRI housing.

### ILI-1BH Intelligent/Analog Ionization Air-Duct High Altitude Detector [1]

The ILI-1BH is an intelligent/analog ionization detector for use in air duct applications at altitudes of 3000 to 8000 feet, with air velocities of 500-4000 feet per minute. It uses either the AD-3I or AD-3XRI housing.

### ILP-2 Intelligent/Analog Photoelectric Detector [1,2]

The ILP-2 is an intelligent/analog photoelectric detector that can be used as an area or duct detector [ILP-2(d)]. It uses either a DB-3S low profile mounting base, a DB-X3RS mounting base with relay, an AD-3ILP or AD-3XRILP duct housing, or an ADBI-60 audible base.

### ILT-1 Intelligent Thermal Detector

The ILT-1 is an intelligent rate-compensated/fixed-temperature type thermal detector. It uses either a DB-3S low profile mounting base, a DB-X3RS mounting base with relay, or an ADBI-60 audible base.

### MSI-10/20 Intelligent Manual Station

The MSI-10/20 is an intelligent manual station designed to interface with an analog loop. The MSI can be flush mounted or surface mounted using the SB-5R mounting box.

### MSI-10B/20B Intelligent Manual Station

The MSI-10B/20B is an intelligent manual station designed to interface with an analog loop. The MSI-10B/20B can be flush mounted or surface mounted using the SB-5R mounting box.

### MSI-B6F Intelligent Manual Station

The MSI-B6F is an intelligent manual station designed to interface with an analog loop. The MSI-B6F is a single-action station; when used with the MS-FD adapter, the MSI-B6F is a double-action station. The MSI-B6F can be flush mounted or surface mounted using the MS-FB backbox.

NOTES

1. Refer to Appendix F, Envirolink
2. Refer to Appendix I, Application Specific Detection (ASD)



Technical Manuals Online! - http://www.tech-man.com

### MSI-MB6 Intelligent Manual Station

The MSI-MB6 is an intelligent manual station designed to interface with an analog loop. The MSI-MB6 is a single-action station; when used with the MS-DA plate, the MSI-MB6 is a double-action station. The MSI-MB6 can be flush mounted or surface mounted using the MS-SB backbox.

### MS-MI Intelligent Manual Station

The MS-MI is an intelligent manual station designed to interface with an analog loop. The MS-MI is a single-action station; when used with the MS-DA plate, the MS-MI is a double-action station. The MS-MI can be flush mounted or surface mounted using the MS-SB backbox.

### TRI-60, TRI-60R, and TRI-60D Intelligent Interface Modules

The TRI-60 series modules are intelligent interface modules that interface direct shorting contact devices with the analog loops. The TRI-60 is a single-input module; the TRI-60R is a single-input module with an independently controllable Form C relay; the TRI-60D is a dual-input module.

### TRI-B6, TRI-B6R, and TRI-B6D Intelligent Interface Modules

The TRI-B6 series modules are intelligent interface modules that interface direct shorting contact devices with the analog loops. The TRI-B6 is a single-input module; the TRI-B6R is a single-input module with an independently controllable Form C relay; the TRI-B6D is a dual-input module.

### TRI-B6M Intelligent Interface Module

The TRI-B6M addressable inferface module interfaces direct shorting contact devices with the analog loops. The TRI-B6M can monitor a normally open aor closed dry contact and it can report the status of the contact.

### TRI-S, TRI-R, and TRI-D Intelligent Interface Modules

The TRI-S/R/D series modules are intelligent interface modules that interface direct shorting contact devices with the analog loops. The TRI-S is a single-input module with an independently controllable Form C relay; the TRI-D is a dual-input module.



Technical Manuals Online! - http://www.tech-man.com

# Conventional Detectors

The conventional devices described below are available for use with the MXL Control Panel. The UL identifiers for compatibility are the same as the model numbers.

### DI-3 Ionization Detector

The DI-3 is an ionization detector for use in open areas at altitudes of 0 to 4000 feet. It uses the DB-3S low profile surface mounting base.

### DI-3H Ionization High Altitude Detector

The DI-3H is an ionization detector for use in open areas at altitudes of 3000 to 8000 feet. It uses the DB-3S low profile surface mounting base.

### DI-A3 Ionization High Air-Velocity Detector

The DI-A3 is an ionization high air velocity detector for use in open areas, computer facilities, and air ducts at altitudes of 0 to 4000 feet, with air velocities of 0 to 1200 feet per minute. It uses the DB-3S low profile surface mounting base.

### DI-A3H Ionization High Air-Velocity, High Altitude Detector

The DI-A3H is an ionization high air velocity, high altitude detector for use in air ducts only at altitudes of 3000 to 8000 feet, with air velocities of 0 to 1200 feet per minute. It uses the DB-3S low profile surface mounting base.

### DI-B3 Ionization Air Duct Detector

The DI-B3 is an ionization detector for use only in air ducts at altitudes of 0 to 4000 feet, with air velocities of 500 to 4000 feet per minute. It must be used with a Series 3 air duct housing (AD-3I or AD-3RI).

### DI-B3H Ionization Air Duct High Altitude Detector

The DI-B3H is an ionization detector for use only in air ducts at altitudes of 3000 to 8000 feet, with air velocities of 500 to 4000 feet per minute. It must be used with a Series 3 air duct housing (AD-3I or AD-3RI).

### DT-11 Thermal Detector

The DT-11 is a thermal detector for use in open areas. It uses the DB-11 low profile surface mounting base or the DB-3S base with the DB-ADPT adapter.

### PE-3 Photoelectric Detector

The PE-3 is a photoelectric detector that responds to a wide range of both flaming and smoldering fire conditions. It uses either the DB-3S low profile surface mounting base or the AD-3ILP or AD-3XRILP air duct housing.



Technical Manuals Online! - http://www.tech-man.com

### PE-3T Photoelectric Detector with Heat Sensor

The PE-3T is a photoelectric detector with heat sensor that responds to a wide range of both flaming and smoldering fire conditions. It uses the DB-3S low profile surface mounting base.

### PE-11 Photoelectric Detector

The PE-11 is a photoelectric detector that responds to a wide range of both flaming and smoldering fire conditions. It uses the DB-11 low profile surface mounting base, the DB-3S base with the DB-ADPT adapter, or the AD-11P/PR air duct housing.

### PE-11T Photoelectric Detector with Heat Sensor

The PE-11T is a photoelectric detector with heat sensor that responds to a wide range of both flaming and smoldering fire conditions. It uses the DB-11 low profile surface mounting base or the DB-3S base with the DB-ADPT adapter.

### PBA-1191 Linear Beam Smoke Detector

The PBA-1191 can detect light or dark smoke buildup at distances between the transmitter (X) and receiver (R) of 17 feet to 280 feet. The PBA-1191 can be used in a variety of areas, including large, narrow, or high rooms, and rooms with high air turbulence. The PBA-1191 requires the PBB-1191 base.

**NOTE:** Only one PBA-1191, and no additional devices, can be connected to a CZM-4 initiating zone.

## Other Devices

### LIM-1 Loop Isolator Module

The LIM-1 Loop Isolator Module isolates short circuits on MXL analog loops. By placing devices between LIM-1s during installation, a short in the wiring within that group is disconnected from the rest of the loop. The remainder of the devices continue to operate. The LIM-1 operates in both Style 6 (Class A) and Style 4 (Class B) circuits.



Technical Manuals Online! - http://www.tech-man.com

# Installation

## Always remove all power before installation.

This section provides general installation instructions for mounting, wiring, and checkout of the **CERBERUS PYROTRONICS™** MXL Control System.

Read this section before installing the equipment to ensure proper installation. If you are not familiar with the MXL, also read the first section of the manual. Be sure to ask Siemens Building Technologies, Inc. Technical Support or an authorized Representative if you have any questions.

Install and use the MXL System in accordance with the appropriate Local, NFPA, and NEC Code requirements.

**WARNING!: Refer to the last page of the manual for a Warning Note required by the FCC for all commercial Class A computing equipment producing a clock frequency of 10K Hz or greater.**

Always remove power (battery and AC) and wait at least 10 seconds to allow the supply voltages to decay before installing or removing any module, cable, or wiring.

**NOTE**: If available, use a printer during the installation procedure as a debugging tool.

### MME-3 and MLE-6 Backboxes

The MME-3 is a medium-size enclosure and the MLE-6 is a large-size enclosure for the MXL/MXLV System. These enclosures consist of a backbox and front door that is shipped assembled. Note that each backbox has a flanged lip to permit semi-flush mounting in addition to the usual surface mounting.

Consider the following when mounting the backbox:

- Mounting height for visual and manual access to the MKB-2 Keyboard/Annunciator
- Weight and size of enclosure
- Local mounting codes
- Direction of door opening

Fasten the backbox securely to a clean, dry, shock-free, and vibration-free surface. Position the backbox clear of obstructions so that the front door opens freely and so that the indicators and controls are easily accessible. Notice that all doors are hinged on the left.

**NOTE:** When the backbox is mounted semiflush, be sure that the position of the backbox permits the front door to swing fully open.



Technical Manuals Online! - http://www.tech-man.com

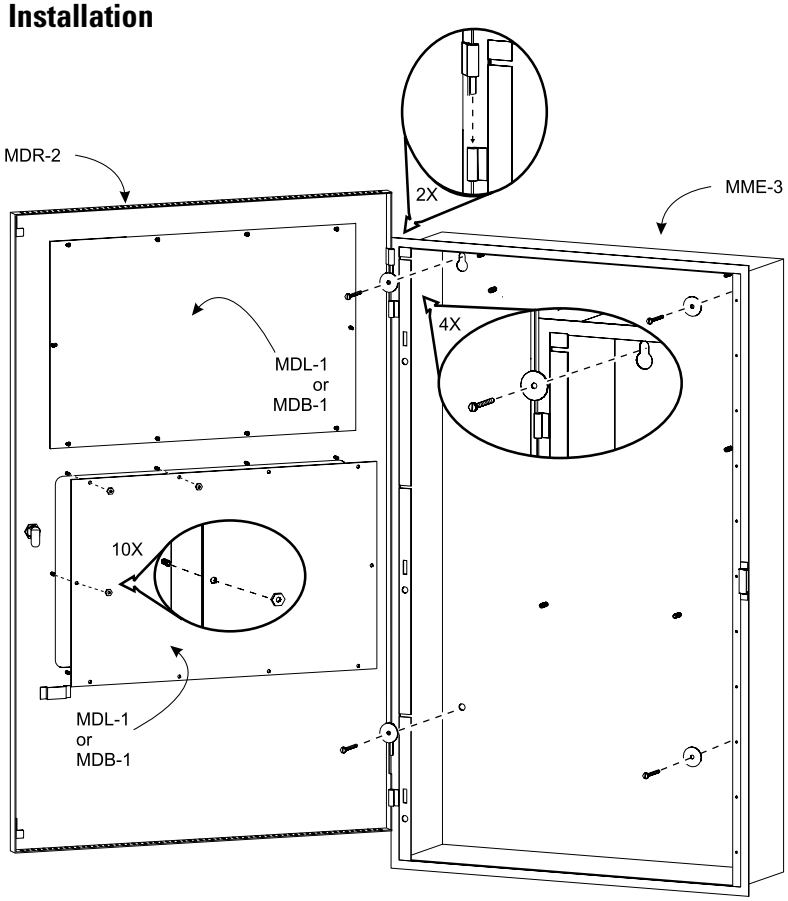


**Installing the Backbox, Front Door and Filler Plates**

**To install the MME-3 or MLE-6 backbox:**

- Slip the front door off the hinges of the box and put it to one side temporarily.
- Remove the knockouts in the backbox where field wiring is required.
- Hold the empty enclosure against the wall at a height that provides easy access.
- Mark drill points on the wall in the center of the two slots on the upper rear of the backbox.
- Drill the two holes and screw in the top bolts, leaving a small gap between the wall and each top bolt.
- Mount the backbox on the two bolts and then install the bottom bolts in the two holes provided.
- Tighten all bolts securely against the back wall of the enclosure.
- Slip the front door back on the hinges of the backbox.

**Front Door**

The front door is the main outer door for the MME-3 or MLE-6 enclosure. The door is supplied without filler plates for the two large openings. To select the appropriate filler plates for the two openings, follow the information below.

- **When visual indication of system operation (LCD, LED, or printer) is required,** install clear panels, the MDL-1 lens, behind the appropriate door openings.
- **When visual indication of the system operation is not required,** install plain blank panels, MDB-1s, behind the appropriate door openings.
- **When audio amplifiers such as the EL-410C/D or ZAC-30 are used,** install the MDG-1 (MXL Door Venting Grill) behind the appropriate door openings.
- After determining which filler plates are required, insert the appropriate plates in the front door using the hardware supplied.

**Pull all field wiring into the backbox.**

Pull all field wiring into the backbox and dress the wiring to the approximate location to which it will go. For information about power limited wiring, refer to ***Appendix L - Power Limited Wiring.***



Technical Manuals Online! - http://www.tech-man.com

## Install the MPS-6 or MPS-12

The MXL is designed to operate from a 120 VAC, 60 Hz power source. Use a separate or dedicated circuitbreaker. Wire in accordance with local codes and Article 760 of the NEC, NFPA 70, latest edition.

Run the earth ground from a suitable source to the MPS-6/-6W or MPS-12/-12W. Check local requirements. **Conduit is not an acceptable conductor.**

Make sure that the dedicated circuitbreaker for the MXL is turned off at the mains.

Place the mounting bracket for the MPS-6/-6W or MPS-12/-12W over the three studs provided in the MME-3/MLE-6 enclosure.

Secure the MPS-6/-6W or MPS-12/-12W to the MME-3/MLE-6 by slipping the flat washers, then the lockwashers, and finally the nuts over the two upper studs. Tighten them securely.

Connect the AC mains to MPS-6/-6W or MPS-12/-12W:

| | Terminal |
|---|---|
| Black (hot) | 1 |
| White (neutral) | 2 |
| Green (earth ground) | 3 |

Install the 14 gauge green ground strap spade lug side to Terminal 3 (green, earth ground) of the MPS-6/6W or MPS-12/12W. Secure the ring lug side of the ground strap to the nearest available stud in the enclosure. The stud size may vary depending on the

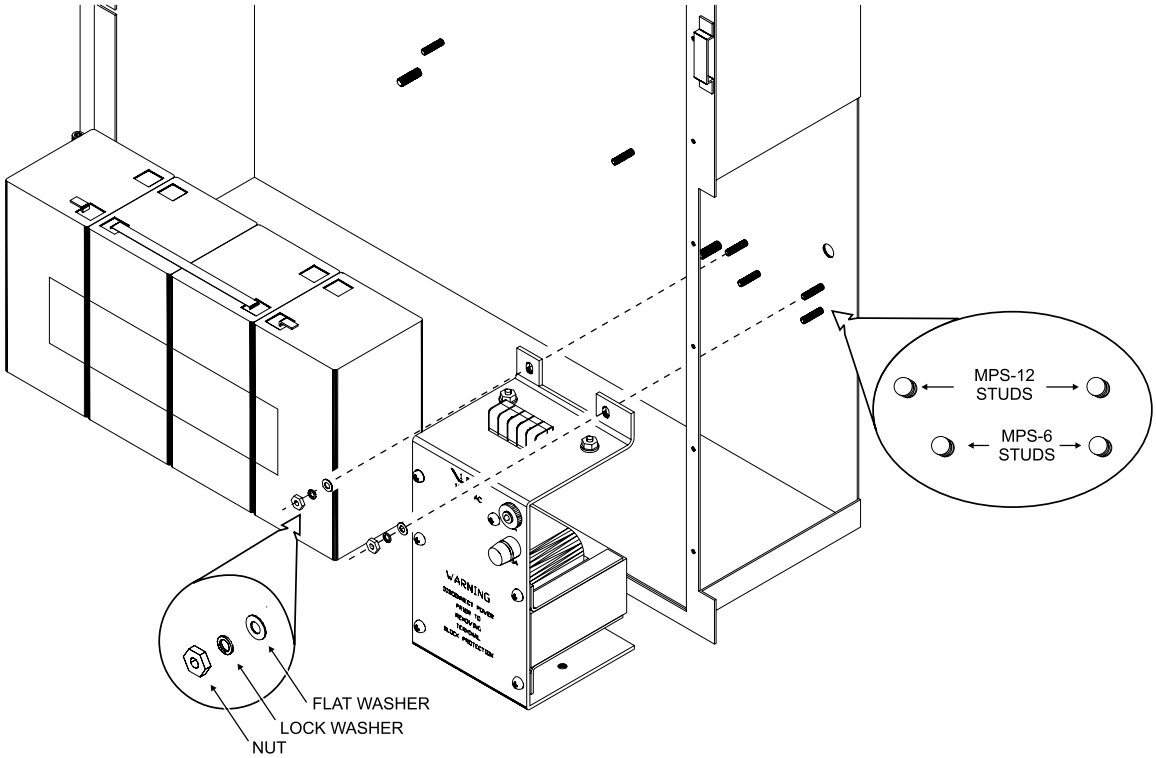


**Installing MPS-6/MPS-12 and Batteries**



Technical Manuals Online! - http://www.tech-man.com

actual system modules and enclosure used. Because the stud may be either a #10 thread of ¼" thread, nuts for both have been provided. The ground strap provided is long enough for all applications and the ring lug is good for both #10 and ¼" studs. If possible, install the ring lug under one of the lockwashers and nuts which secure the MPS-6/6W or MPS-12/12W itself.

Connect the 3-wire cable coming from the MPS-6/-6W to the MMB-1/-2, P1 or PSR-1, P12 or connect the 8-wire cable coming from the MPS-12/-2W to the MMB-1/-2, P14 or PSR-1, P10.

## General Instructions for Installing System Modules

Each MXL/MXLV module is installed in one of three ways:

- Installed directly onto the MBR-MP mounting plate
- Plugged into a card edge connector (MOM / OMM / PSR)
- Installed in other types of system enclosures (System 3 backboxes, RCC-1/1F backboxes, etc.)

In all cases, unpack each module just prior to installation. For modules packaged in antistatic bags, use proper antistatic practices once the module is removed from the bag.

### Setting DIP Switches

In some cases, modules require you to set DIP switches as follows:

**To open a rocker switch,** press down on the side of the rocker marked OPEN. To close a rocker switch, press down on the side of the rocker *opposite* the side marked OPEN.

**To close a slide switch,** push the slide to the side marked ON. To open a slide switch, push the slide to the side *opposite* the side marked ON.

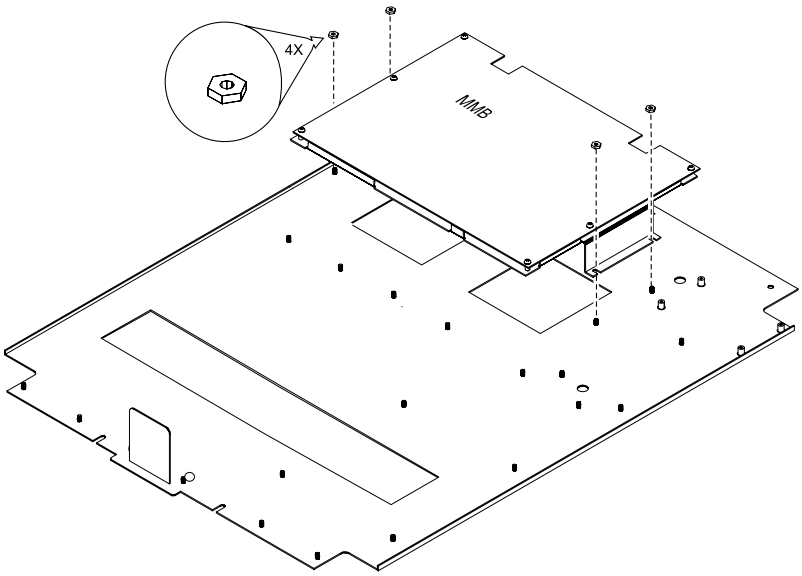


**Installing the MMB-1/-2 on the Mounting Plate**

The following modules can be installed onto the mounting plate (MBR-MP):

## Installing the MMB-1/-2 (Main Enclosure)

The MMB-1/-2 installation kit consists of the following:

Three resistors - Two - P/N 140-820380 (Notification Appliance Circuit) and One - P/N 140-820150 (Style 4 Network)

Battery cable with a wire



Technical Manuals Online! - http://www.tech-man.com

- Place the MMB-1/-2 with the mounting bracket over the four standoffs in the upper left portion of the mounting plate.
- Secure in place using the hardware provided.

## Install the PSR-1 (Remote Enclosure)

The PSR-1 Remote Power Supply mounts on the plate where the MMB-1/-2 would normally be mounted.

Before installing the PSR-1, set the address on S1 and the options on S2. Refer to the CSG-M configuration printout for the address of the module. Use the Network Address Programming Table at the end of this chapter to set the address for this switch.

Switch S2 , SW1 enables or disables the network connection. Use the *Disable Network Switch Settings* table to set this switch.

**DISABLE NETWORK SWITCH SETTINGS**

| S2-SW1 | Network |
|---|---|
| Open (OFF) | Enabled |
| Closed (ON) | Disabled* |

*When not connected to the MXL network

S2, SW2/SW3/SW4 defines the maximum allowable charging current of the battery. Use the *Battery Switch Settings* table to set these switches. With CSG-M Rev. 3.01 and higher, battery sizes can be selected through software.

**BATTERY SWITCH SETTINGS**

| DIP Switches | | | Charging Current |
|---|---|---|---|
| S2-SW2 | S2-SW3 | S2-SW4 | |
| Open (OFF) | Open (OFF) | Closed (ON) | 2.0 amps max |

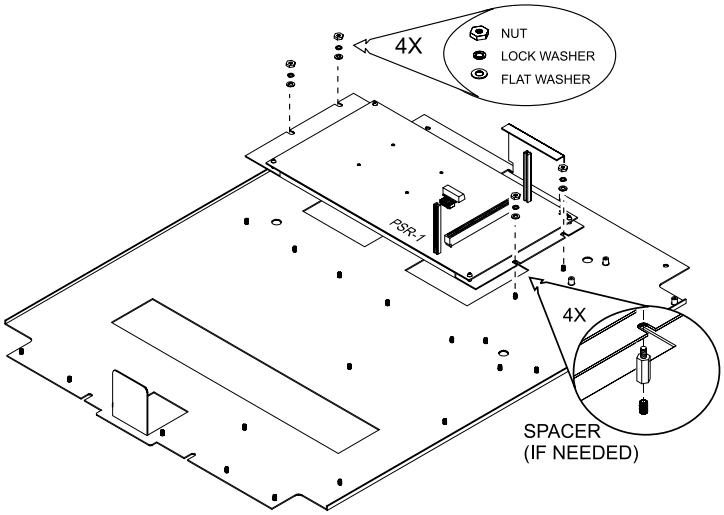


**Installing the PSR-1 on the Mounting Plate**

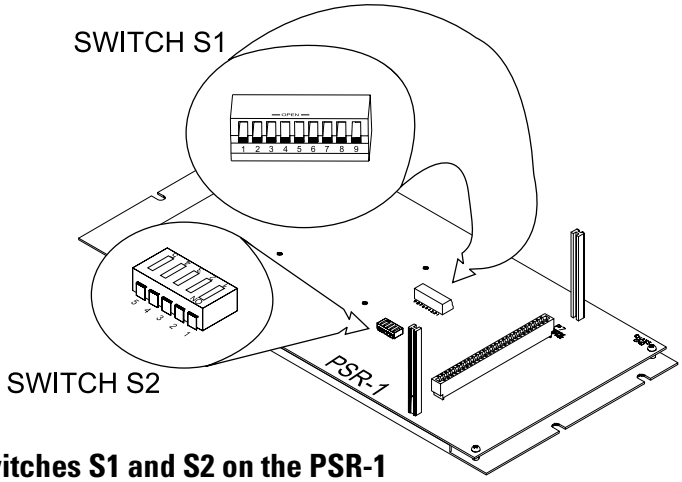


**Switches S1 and S2 on the PSR-1**

The *Battery Voltage Thresholds* table defines the battery voltage thresholds for the listed battery trouble conditions. These trouble conditions are shown on the MKB-2 Annunciator.

**BATTERY VOLTAGE THRESHOLDS**

| Battery Status | Conditions | Battery Voltage (Volts) |
|---|---|---|
| Battery Not Installed | | <14.0 |
| Charger Disabled | | <18.3 |
| Battery Low Fault | On Battery | <21.0 |
| Battery Low Fault | On AC | <24.0 |
| Battery High Fault | | >30.0 |



Technical Manuals Online! - http://www.tech-man.com

**Security Mode—UL 1076**
**Disabling the Tamper Switch (S2-SW5)**
The PSR-1 does not support the use of security points from initiating circuits in its enclosure. To disable the tamper switch input of the PSR-1, set the security mode to disabled.

**DISABLE SECURITY MODE SWITCH SETTINGS**

| S2-SW5 | UL1076 |
|---|---|
| Open (OFF) | Disabled |

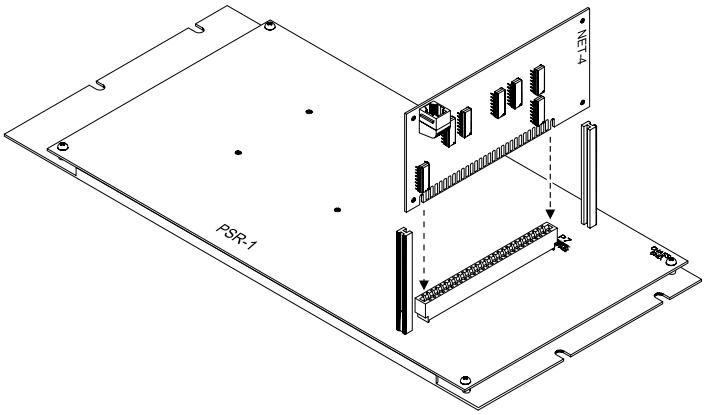


**Installing the NET-4 onto the PSR-1**

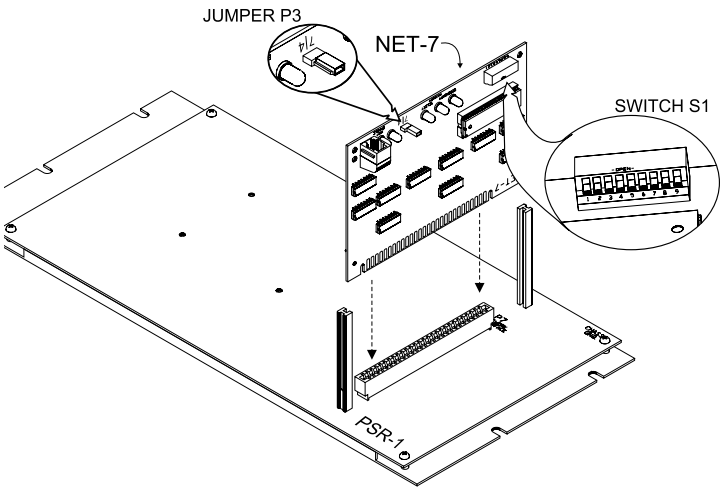


**Installing the NET-7 onto the PSR-1**

## Installing the NET-4 onto the PSR-1

- Mount the two card guides supplied on the right side of the PSR-1 above and below P7. Slip the slot at the base of the card guide under one of the mounting screws and tighten the screw.
- Remove the NET-4 from the anti-static bag. **Do not touch the gold plated card edge.**
- Insert the NET-4 into the card edge connector P7 on the PSR-1 with the components facing the right side of the PSR-1.
- Refer to the *PSR-1 Installation Instructions*, P/N 315-090911, for information on the connection to the MXL network.

**CAUTION: NET-4s and NET-7s cannot be combined in the same system.**

## Installing the NET-7 onto the PSR-1

- Remove the NET-7 from the anti-static bag. **Do not touch the gold plated card edge.**
- Set the address for the NET-7 using switch S1. Use the Network Address Programming Table at the end of this chapter to set the address for this switch. Be sure that the address agrees with the CSG-M network map.
- Determine whether the communication mode is Style 4 or Style 7. Place the shorting jumper on P3 to agree with the style selected.
- Mount the two card guides supplied onto the PSR-1 by loosening the screws above and below P7 on the PSR-1. Then slide the guides under the screws and tighten them.


Technical Manuals Online! - http://www.tech-man.com

- Install the NET-7 into P7. Be sure that the board is firmly seated.
- Refer to the NET-7 wiring diagram in the ***Connections and Ratings*** Chapter.

## Installing the NET-7M onto the PSR-1

- Remove the NET-7M from the antistatic bag. **Do not touch the gold plated card edge.**
- Mount the two card guides supplied onto the PSR-1 by loosening the screws above and below P7 on the PSR-1. Then slide the guides under the screws and tighten them.
- Install the NET-7M into P7. Be sure that the board is firmly seated.
- Refer to the NET-7M wiring diagram in the ***Connections and Ratings*** Chapter. Connect the network wires to TB4 on the PSR-1 as shown.

## Installing the MOM or OMM

If a system requires the MOM or OMM optional card cage, now is the time to install it. If installing both, group the MOMs together and the OMMs together on the mounting plate.

The installation kit for the MOM includes the following:

One 2-wire cable (P/N 555-190969)
Two 8-conductor ribbon cables (P/N 555-190967 and P/N 555-193344)
Four card guides
Appropriate mounting hardware

The installation kit for the OMM includes the following:

One 8-conductor ribbon cable (P/N 555-190967)
One 14-conductor ribbon cable (P/N 555-192155)
Appropriate mounting hardware

### Installing the Card Guides on the MOM

The plug-in modules are supported by card guides installed using the following procedure:

- Slip the slot at the base of the card guide under one of the mounting screws.
- Make sure that the locating pin on the guide is seated in the hole of the MOM.
- Tighten the mounting screw.

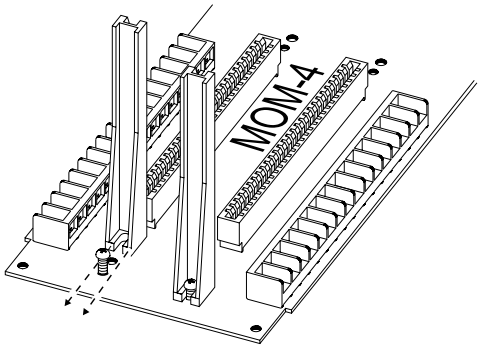


**Installing Card Guides on the MOM**

### Mounting the MOM Card Cage

The MOM mounts vertically on the MBR-MP mounting plate below the MMB-1/-2 or the PSR.

- Hold the MOM so that terminal block TB5 is at the bottom.
- Place the module on the mounting studs in the left-hand position of the MBR-MP mounting plate.



Technical Manuals Online! - http://www.tech-man.com

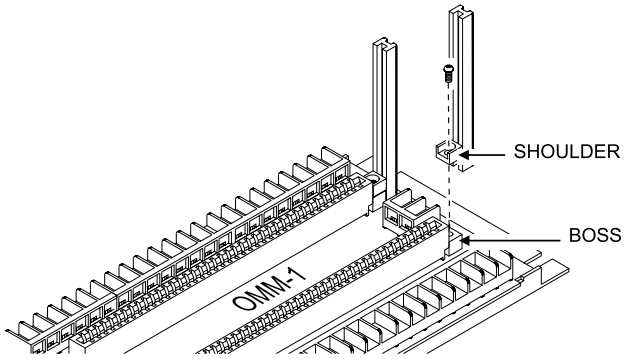


**Installing Card Guides on the OMM**

- Fasten the MOM in position with the No. 10 nuts provided.
- To mount any other MOM modules used in the system, repeat the above steps. Use the center or right-hand position for the additional modules as needed.

**Installing the Card Guides on the OMM**

The plug-in modules are supported by card guides installed using the following procedure:

- Place the card guide shoulder on the raised boss at the end of the card edge connector.
- Align the hole in the shoulder with the hole in the boss.
- Place the mounting screw in the hole in the shoulder and tighten the screw.

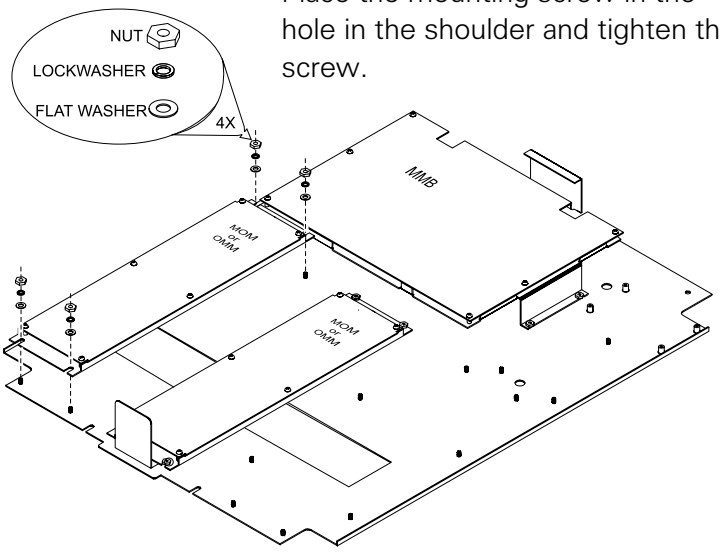


**Installing the MOM or OMM on the Mounting Plate**

**Mounting the OMM Card Cage**

The OMM mounts vertically on the MBR-MP mounting plate below the MMB-1/-2 or the PSR.

- Hold the OMM-1 so that the two position terminal block TB1 is at the top.
- Place the module on the mounting studs in the left-hand position of the MBR-MP mounting plate.
- Fasten the OMM in position with the No. 10 nuts provided.
- To mount any other OMM modules used in the system, repeat the above steps. Use the center or right-hand position for the additional modules as needed.

## Installing the TSP-40 Printer

**NOTE:** Only two MOM or OMM card cages can be mounted if a TSP-40 printer is installed.

- Place the TSP-40 over the four studs on the MBR-MP mounting plate below and to the right of the MMB-1/-2.
- Secure in place using the hardware provided.

**Electrical Installation**

The TSP-40 comes with two attached cables—a 2-conductor power cable and a 6-conductor data cable.

- Connect the 6-conductor data cable to P4 on the MMB-1/-2 or P4 on the PSR-1.
- **If there is** *no* **MOM installed,** connect the 2-conductor power cable to P3 on the MMB-1/-2 or P1 on the PSR-1.
  **If there** *is* **a MOM installed,** connect the 2-conductor power cable to P8/P5 on the MOM.



Technical Manuals Online! - http://www.tech-man.com

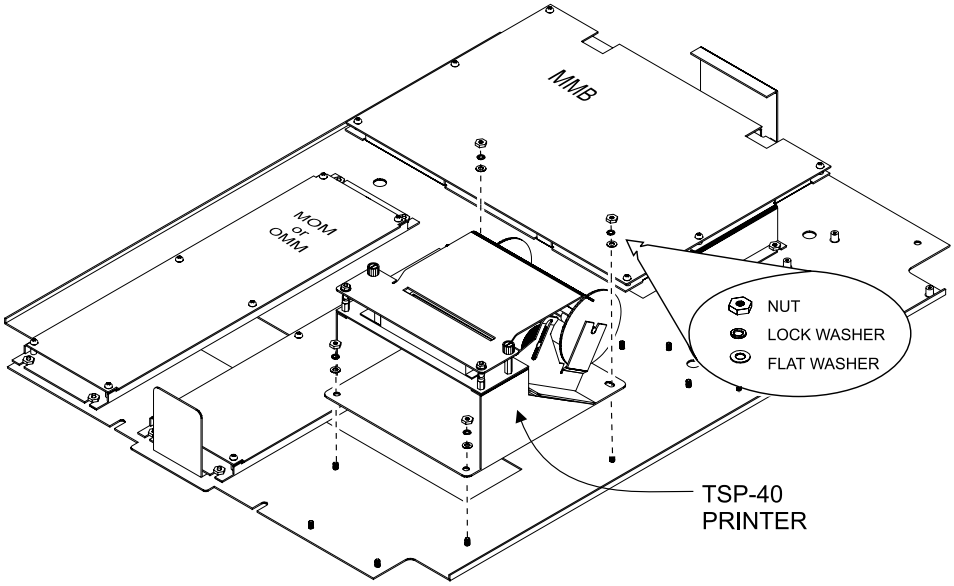


**Installing the TSP-40 Printer on the Backplate**

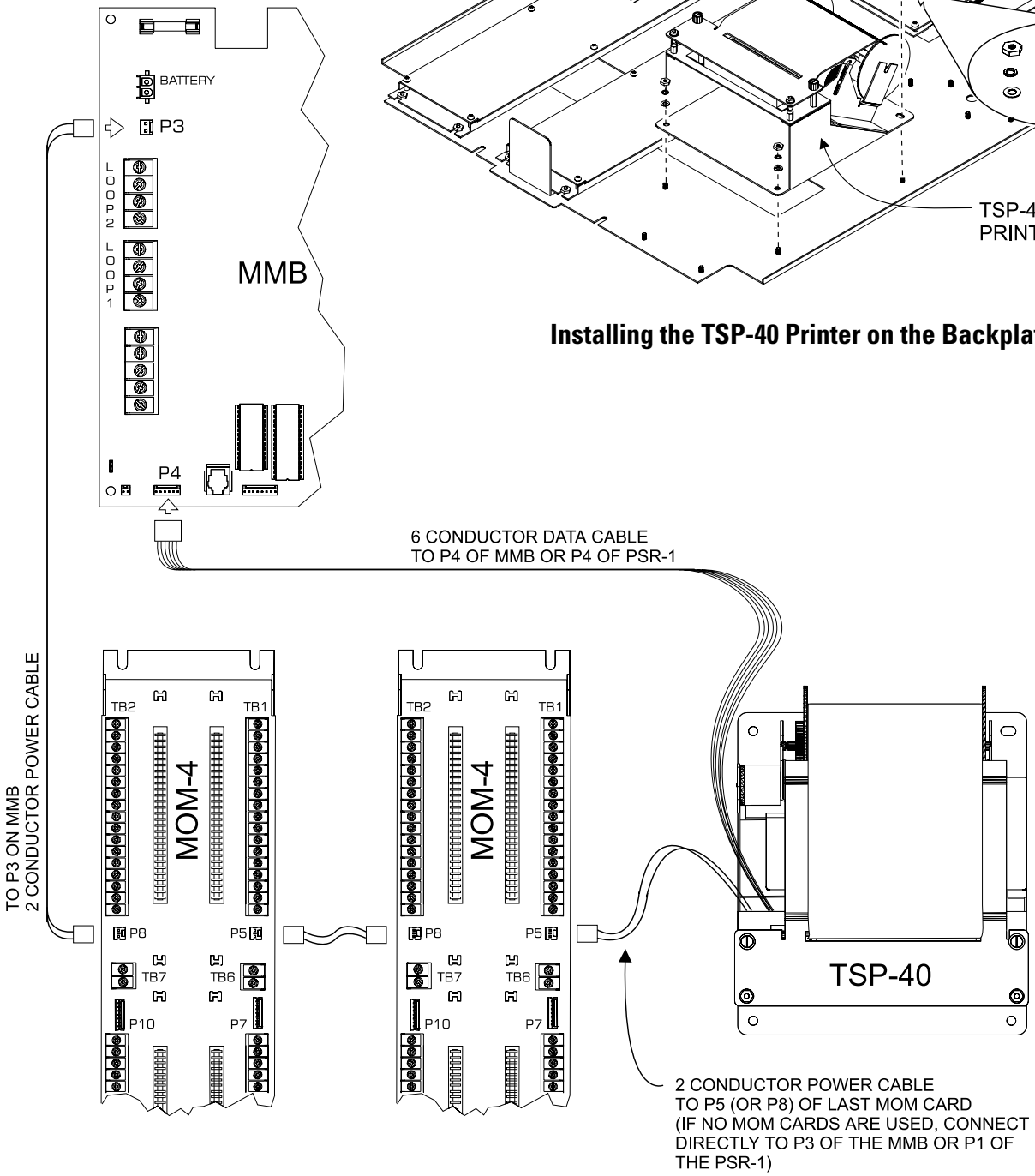


**Connecting the TSP-40 Printer**



Technical Manuals Online! - http://www.tech-man.com

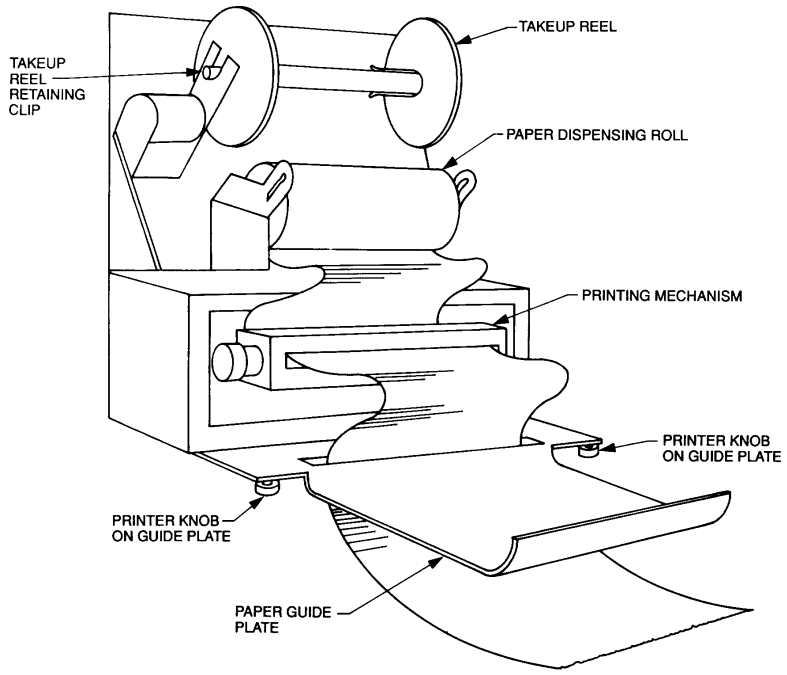


## Installing the Paper Roll

### Installing the Paper Roll

To install the paper roll on the TSP-40 Printer:

- Loosen the two knobs on the printer and drop the paper guide plate, exposing the printer mechanism.
- Remove the paper dispensing roller.
- Put the roller through the paper roll and place the paper in the dispenser with the loose end of the paper against the printer.
- Feed the loose end of the paper into the slot at the rear of the printer mechanism. (The slot faces the paper roll just above the mounting surface of the printing mechanism.)
- Advance the paper by turning the large gear on the right side of the printer counterclockwise. Advance the paper until one inch of paper extends out from the top of the printer.
- Hold the paper with both hands and gently pull until eight inches of paper extends out from the printer.
- Feed the paper through the slot in the guide plate.
- Return the guide plate to its normal position and secure it with the two knobs.
- Remove the takeup reel by pulling straight out on both sides of the reel.
- Separate the reel by pulling on both ends, revealing the paper retention clip.
- Place the loose end of the paper over the larger part of the reel and slide the smaller end of the reel over the paper. This locks the paper onto the takeup reel.
- Making sure that the drive gear on the reel is on the left side, put the takeup reel back into the retaining clips, and press down until the reel snaps into place.
  Be sure that the drive gear has engaged the drive motor gear.
- Take up any slack in the paper by turning the takeup reel until the paper becomes taut.

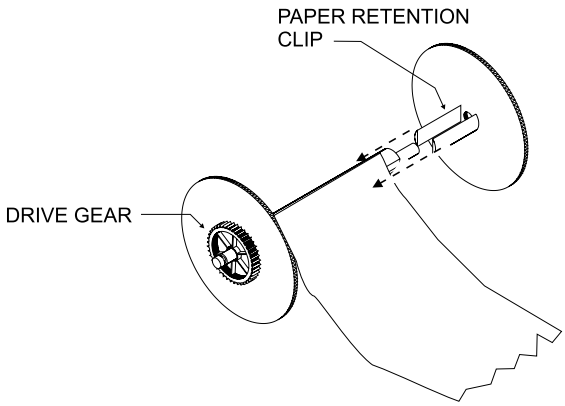


**Installing Paper onto the Takeup Reel**



Technical Manuals Online! - http://www.tech-man.com

### Changing the Paper Roll

Change the paper roll following the instructions on the previous page, when the paper supply is low, so that you do not lose a printed record of messages sent to a full printer buffer.

The paper roll is *P/N TSP-40-PP*.

Press **CLEAR** to resume printing after changing the paper roll or wait about 5 minutes for the printer to resume printing automatically.

## Installing the PIM-1

The PIM-1 has one factory installed jumper. Set it according to the instructions below before installing the PIM-1 on the MBR-MP.

### Jumper G1

This jumper disconnects the output of the remote printer from PIM-1.

**For supervised printers:**
Leave jumper G1 in place.

**For non-supervised printers:**
Cut G1 to stop any input to the PIM-1.

### For an MXL System without the Voice Option

- **With an MKB-2**: Use the cable (P/N 555-192242) supplied with the PIM-1 to connect P2 on the PIM-1 to P8 on the MMB-1/-2.
- Use the cable supplied with the MKB-2 to connect P1 of the PIM-1 to P1 of the ANN-1.

Refer to the *PIM-1 Installation Instructions* (P/N 315-091462).

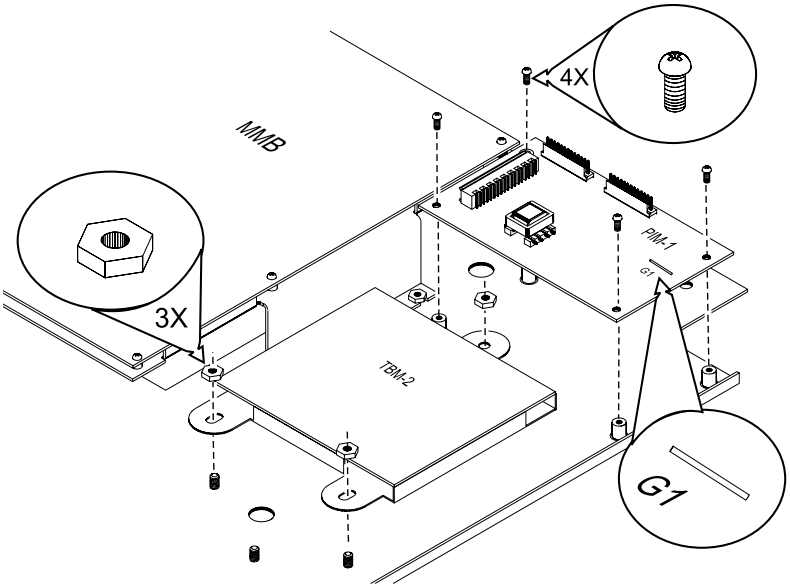


**Installing the PIM-1 and TBM-2**

### For an MXLV System with the Voice Option

- Use the cable (P/N 555-192242) supplied with the PIM to connect P2 on the PIM with P8 on the MMB-1/-2.
- Use the cable supplied with the MKB-2 to connect P1 on the PIM-1 to P5 on the ACM-1. (P4 on the ACM-1 then connects to P1 on the ANN-1 in this configuration.)

Refer to the *PIM-1 Installation Instructions* (P/N 315-091462).

### Installing the PIM-1 in Other Enclosures

The PIM-1 can also be installed in the RCC-1/-1F box or the MSE-2 enclosure. For information on those configurations, refer to the *RCC-1/-1F Installation Instructions* (P/N 315-095364) or to the *MSE-2 Installation Instructions* (P/N 315-092403) as appropriate.



Technical Manuals Online! - http://www.tech-man.com

### Communication Parameters

Set the communication parameters for the connected devices so that they agree with those specified by the CSG-M. See the *CSG-M Manual* (P/N 315-090381) for information on setting the parameters. UL requires that the printer be in the same room as the MXL/MXLV Control Panel.

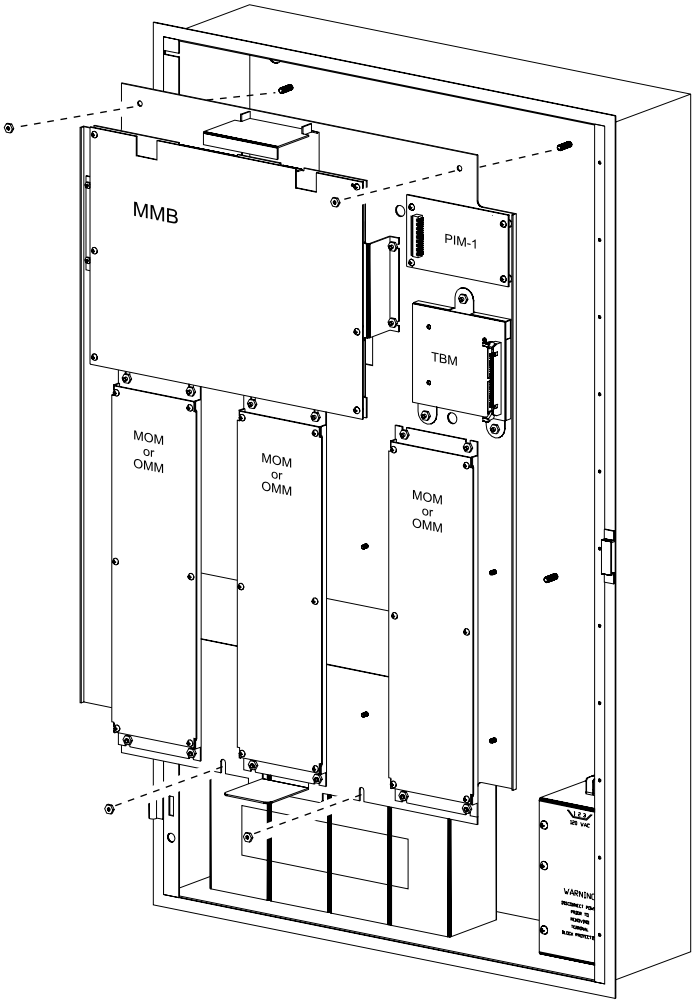


**Installing the Mounting Plate into the Backbox**

## Installing the TBM-2 (MXLV Only)

The TBM-2 mounts on the right side of the mounting plate next to the MMB.

- Before installing the module, mount the PCB assembly to the mounting bracket supplied using the screws provided.
- Place the TBM-2 assembly face up on the three threaded studs arranged in a triangle with TB5, the 15-position terminal block at the top.
- Secure the TBM-2 with the nuts provided.

## Installing the Assembled Mounting Plate (MBR-MP/MBR-3MP*)

Install the assembled MBR-MP/MBR-3MP Mounting Plate using the hardware provided. Refer to the *MBR-MP and MBR-3MP Installation Instructions*, (P/N 315-094882).

*The MBR-3MP is installed in the MLE-6 enclosure.

## Installing the MKB-2 Keyboard/ Annunciator

The MKB-2 is supplied with the keyboard/annunciator mounted to the hinged panel. Black filler plates are installed to the right and left to accommodate an optional telephone and microphone.

### Mounting the MKB-2

Install four screws in the first group of four tapped holes in the right flange. Leave a ¼-inch gap between the head of the screw and the flange. Slide the slots of the MKB-2 panel hinge under the head of the screws and tighten.



Technical Manuals Online! - http://www.tech-man.com

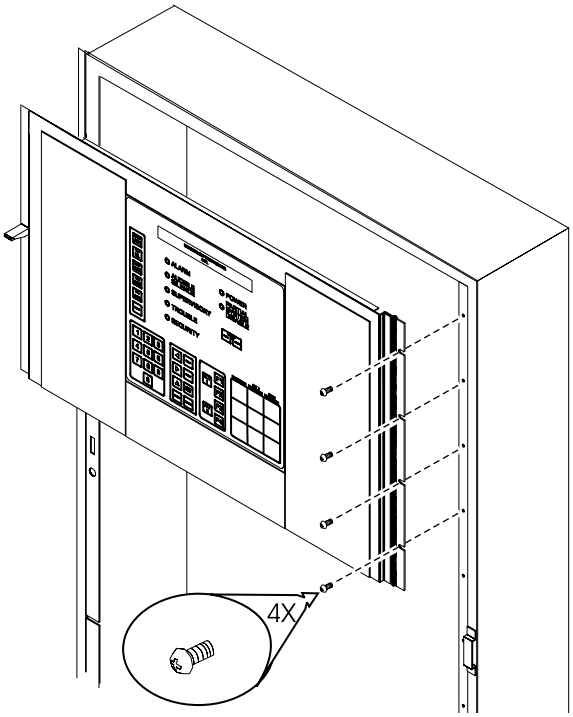


**Mounting the MKB-2**

If the panel locking fastener is not aligned with the hole located on the left flange, loosen the screws and adjust accordingly. Retighten the screws.

Once the MKB-2 is mounted to the enclosure, connect the cable (P/N 555-192238) between P1 on the ANN-1 (on the back of the MKB-2) and P8 on the MMB-1/-2.

**NOTE:** Remember that this cable is polarized and connects in one way only. Do not force it. Be sure the black tracer wire on the edge of the cable is close to the "1" on position 1 of the connector P1 on the ANN-1 and the "1" on position 1 or P8 on the MMB-1/-2.

### Setting the ANN-1 Network Address

- Set the network address on S1, the switch on the ANN-1 board located on the back of the MKB-2. Use DIP switches SW1 and SW2 on switch S1 to set the network address of the MKB-2.
- The MKB-2 module address is always set within network addresses 248 - 251. Set the individual switches as follows:

**ANN-1 SWITCH SETTINGS**

| Switch | Address Setting For: | | | |
|---|---|---|---|---|
| | 248 | 249 | 250 | 251 |
| S1-SW1 | Open-OFF | Closed-ON | Open-OFF | Closed-ON |
| S1-SW2 | Open-OFF | Open-OFF | Closed-ON | Closed-ON |
| S1-SW3 | Closed-ON | Closed-ON | Closed-ON | Closed-ON |
| S1-SW4 | Closed-ON | Closed-ON | Closed-ON | Closed-ON |
| S1-SW5 | *See Setting Supervision* | | | |

- **One supervised MKB-2 must be installed at network address 251. Other supervised MKB-2s may be at the other addresses.**

### Setting Supervision

Use switch S1-SW5 on the ANN-1 to select or deselect supervision. If your ANN-1 has a switch with position 1 indicated on the left-hand side, ignore the printing on the switch. SW1 on S1 is at the extreme right-hand side of S1, regardless of any other marking.



Technical Manuals Online! - http://www.tech-man.com

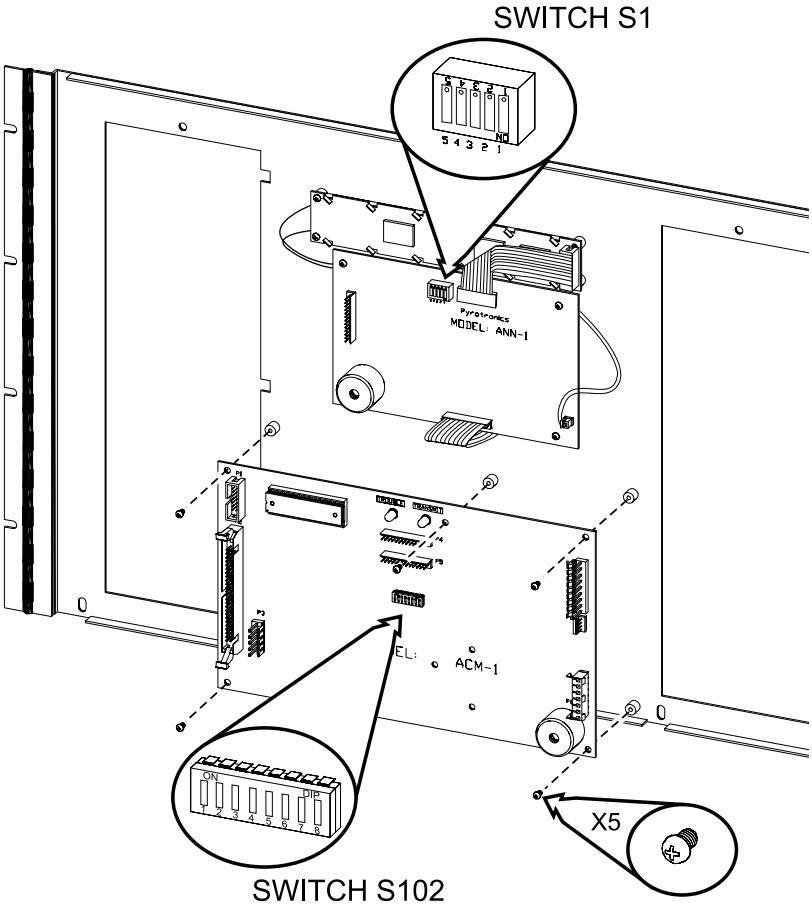


**Setting the Switches on the ANN-1 and ACM-1**

**To set for supervision**
S1-SW5 = Closed (ON)

**To set for non-supervision**
S1-SW5 = Open (OFF)
The supervisory mode is independent of the network address.

**NOTE:** When you select non-supervision for an annunciator, there must also be one and only one supervised annunciator at the same address.

## Installing the ACM-1 (MXLV Only)

To set the address of the module:

- Remove the ACM-1 from its protective bag.
- Refer to the CSG-M configuration printout for the address of the ACM-1 module.
- Set the ACM-1 address on switch S102.
- Find the correct setting for the ACM-1 address in the Network Address Programming Table at the end of this chapter and use DIP switch S102, switches SW1 - SW8, to set the address for the module.

### Mounting the ACM-1 Module

- Mount the ACM-1 module on the back of the MKB-2 front panel, below the ANN-1 module. Check that the ribbon cable connector P1 is in the upper left corner.
- In that position, place the module over the five threaded mounting spacers.
- Fasten the module in place with the screws provided.


Technical Manuals Online! - http://www.tech-man.com

### Wiring the ACM-1

**NOTE:** Remember that all cables that connect to the ACM-1 are polarized and connect in one way only. Do not force them. The location of pin 1 on connectors is indicated by marks on the pin or by color traces on the wires. Be sure the black tracer wire is close to the "1".

- Connect the long 15-conductor ribbon cable (P/N 555-192238) from the MMB-1/-2, P8 (or from the PSR-1, P5) to P5 on the ACM-1.
- Connect the short 15-conductor ribbon cable (P/N 555-192242) from ANN-1, P1 to P4 on the ACM-1.
- Connect the 50-ribbon cable (P/N 555-192201) from TBM-2, P3 to P2 on the ACM-1.
- Connect the 5-wire cable (P/N 600-190220) from TBM-2, P2 to P3 on the ACM-1.

## Installing the BTC-1 on the ACM-1 (MXLV Only)

The BTC-1 mounts on either the ACM-1 on P6 (to provide backup of the two primary tones) or the OCC-1 (to provide a default tone in degrade mode) with two snap-in type standoffs and a comb-like connector.

### Setting the Tones

Before installing the BTC-1 on the OCC-1, set the desired tones on switch S1 using DIP switches SW1-SW4 for the first tone selection and DIP switches SW5-SW8 for the second tone selection. Refer to the function section of the CSG-M configuration printout for the tones to be configured.

**BTC-1 TONE SWITCH SETTINGS**

| Setting | | Tone |
|---|---|---|
| ALERT<br>8 7 6 5 | EVAC<br>4 3 2 1 | |
| 0 0 0 0 | 0 0 0 0 | DO NOT USE |
| 0 0 0 X | 0 0 0 X | Chime |
| 0 0 X 0 | 0 0 X 0 | 2000 Hz |
| 0 0 X X | 0 0 X X | Slow Whoop |
| 0 X 0 0 | 0 X 0 0 | Yelp |
| 0 X 0 X | 0 X 0 X | Wail |
| 0 X X 0 | 0 X X 0 | California Code |
| 0 X X X | 0 X X X | 900 Hz Pulsed at 120 Pulses Per Minute |
| X 0 0 0 | X 0 0 0 | DO NOT USE |
| X 0 0 X | X 0 0 X | Horn |
| X 0 X 0 | X 0 X 0 | Temporal Code 3 |
| X 0 X X | X 0 X X | 900 Hz Pulsed at 30 Pulses Per Minute |
| X X 0 0 | X X 0 0 | Yeow |
| X X 0 X | X X 0 X | High/Low |
| X X X 0 | X X X 0 | DO NOT USE |
| X X X X | X X X X | 900 Hz Tone |

X=Closed or ON  0=Open or OFF

### Mounting the BTC-1

Install the standoffs and comb connector in the component side of the ACM-1.

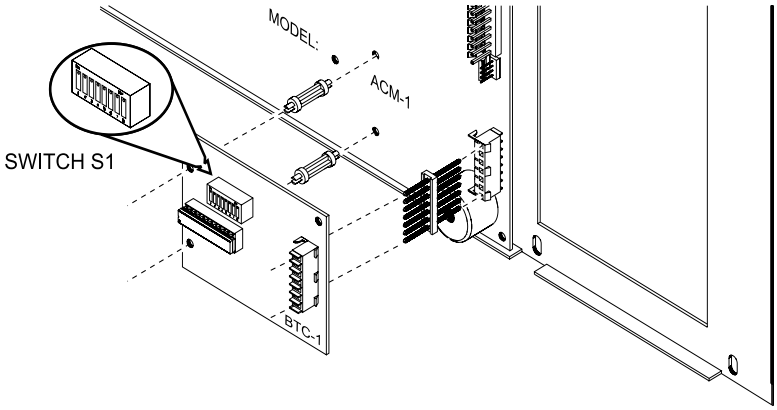


**Installing the BTC-1 on the ACM-1**



Technical Manuals Online! - http://www.tech-man.com

- Position the BTC-1 over the connector and standoffs with the components of the board facing out. Be certain that the standoffs and the connector pins line up with their respective holes in the BTC-1 card and the connector.
- Place the BTC-1 on the standoffs and connector by pressing it into place. This takes some effort. Be careful because once the standoffs are installed, they are difficult to remove.

### Installing the MMM-1 (MXLV Only)

- Before installing the MMM-1, remove and discard any blank filler plate that is to the left of the MKB-2 as viewed from the front of the panel.
- Mount the MMM-1 onto the MKB-2 panel on the left side of the keyboard/annunciator display (as viewed from the front).
- Connect the 9-wire cable attached to the MMM-1 to P7 on the ACM-1.

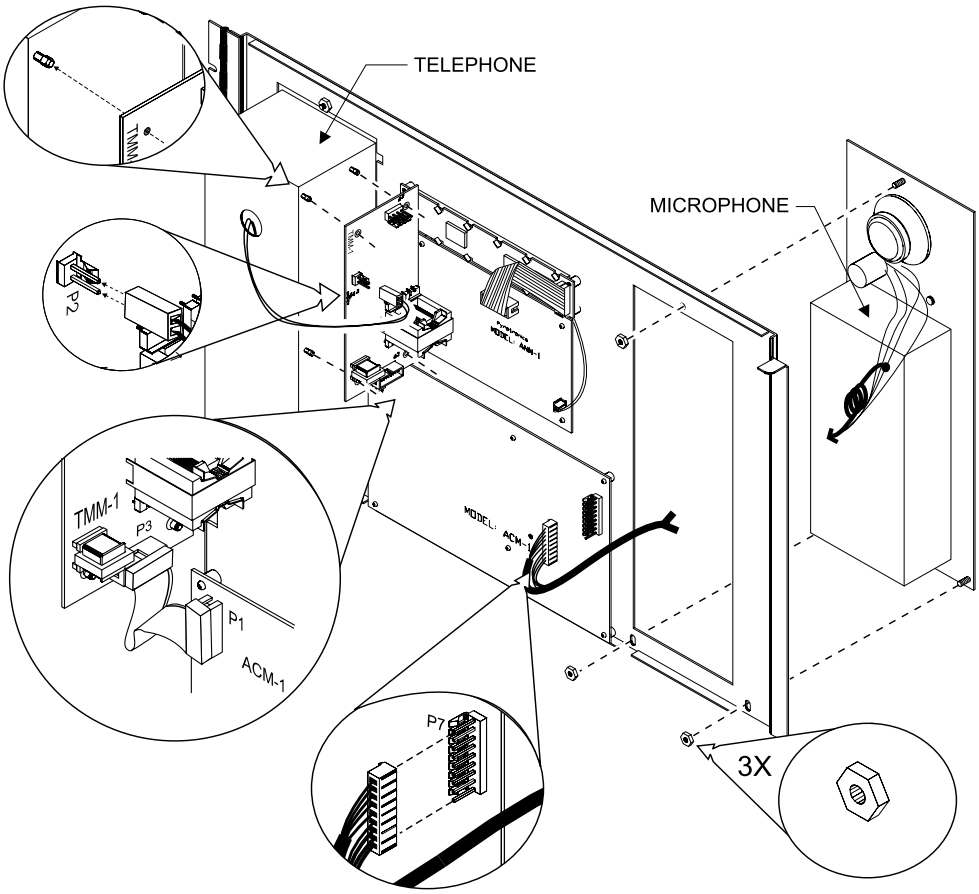


**Installing the MMM-1 and the TMM-1**



Technical Manuals Online! - http://www.tech-man.com

## Installing the TMM-1 (MXLV Only)

- Before installing the TMM-1, remove and discard any blank filler plate that is to the right of the MKB-2 as viewed from the front of the panel.
- Mount the TMM-1 onto the MKB-2 panel to the right side of the keyboard/annunciator display (as viewed from the front).
- From the front of the panel, insert the TMM-1 studs through the holes in the MKB-2 panel, and from the rear of the panel secure the studs with the three No. 8 nuts supplied.
- Mount the electronics assembly to the rear of the TMM-1 housing by placing it over the four snap studs on the side of the rear. Be sure that the 14-pin connector (P3) is at the bottom of the assembly. Then press down on the board to seat it firmly.

### Wiring the TMM-1

Install the cables from the module to the paired connectors as follows:

- Connect the 2-wire cable from the hole at the rear of the telephone housing to P2 on the left of the PC board mounted on the TMM.
- Connect the 4-wire cable provided (P/N 600-180364) between P1 at the top of the TMM-1 PC board and P5 on the TBM-2, which is located on the right in the system backbox.
- Connect the 14-position ribbon cable provided (P/N 555-192236) between P3 on the TMM-1 and P1 on the adjacent ACM-1 module.

**MHD PANELS**

| Model | Purpose | Location | Mounting |
|---|---|---|---|
| MHD-1 | Dead front barrier with cutout for printer when needed | CONTROL PANEL*:<br>Use middle position (Printer available) | Place in second group of four holes by hinge |
| | | REMOTE PANEL:<br>Use top or middle position (No printer) | Place in first and/or second group of four holes |
| MHD-2 | Dead front barrier only | CONTROL PANEL or REMOTE PANEL:<br>Use in bottom enclosure position | Place in bottom three mounting holes |
| MHD-2W | Dead front barrier used to mount a DC-35S on the inside of the panel. | | |
| MHD-3 | Mounting for VSM-1, VLM-1, VFM-1, and VSB-1 modules | CONTROL PANEL*: Use in middle position | Place in second group of four holes by hinge |
| | | REMOTE PANEL: Use in top or middle position | Place in first and/or second group of four holes |
| MHD-4 | A cutout for the TSP-40 printer and with mounting for VSM-1, VLM-1, VFM-1 and VSB-1 modules | CONTROL PANEL*: Use in middle position | Place in second group of four holes |
| | | REMOTE PANEL: Use in top or middle position | Place in first or second group of four holes |
| MHD-5 | Mounting for VSM-1, VLM-1, VFM-1 and VSB-1 modules | REMOTE PANEL ONLY:<br>Use in bottom enclosure position | Place in bottom three mounting holes |
| *CAUTION: The first group of 4 mounting holes is required for the MKB-2. | | | |



Technical Manuals Online! - http://www.tech-man.com

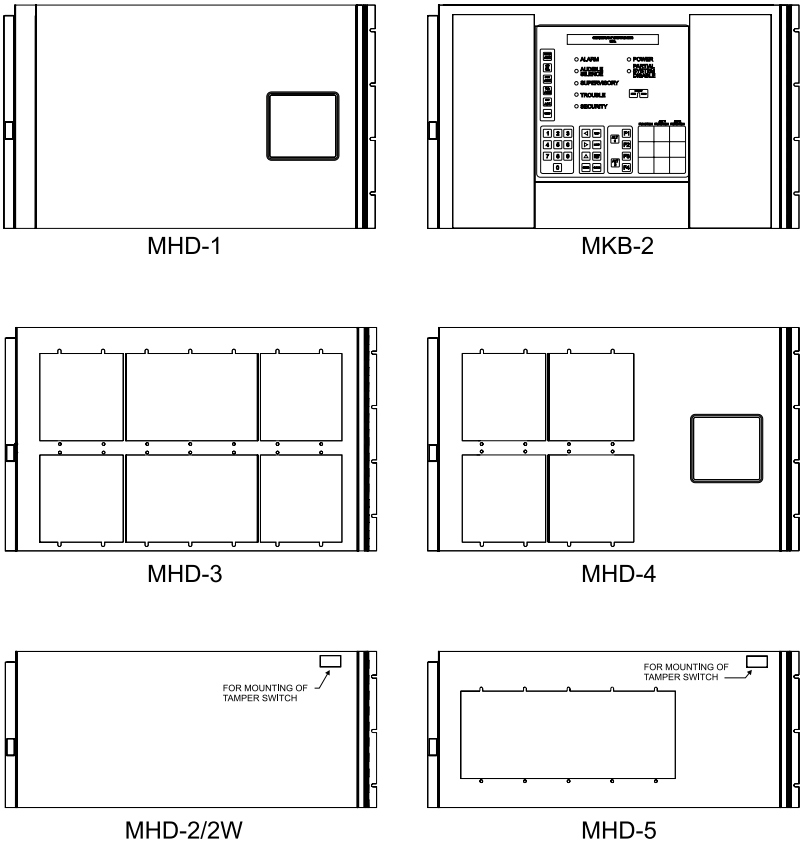


**The MHD Panels**

## Installing the TSW-2 Tamper Switch

If your configuration (UL 1076) requires the TSW-2 Tamper Switch, install it now.

The TSW-2 mounts into the rectangular slot located in the upper right side of the MHD-2/-2W or MHD-5 panel.

- Place the cable/connector and the switch terminals through the opening and press firmly into place.
- Plug the cable on the TSW-2 into P9 on the MMB-1/-2 or P3 on the PSR-1.

## Installing the VSM/VLM/VFM/VSB Modules

Each VSM-1/VLM-1/VFM-1 module occupies one of up to 31 subaddresses of the ACM-1. The VSB-1 Voice Switch Blank Plate is used to fill in any blank spaces on an MHD panel.

## Installing the MHD Panels

The MHD series of panels is used on the MME-3/MLE-6 backbox to provide support for additional electronic modules or to provide dead front panels where needed. The MHD panels can be used as shown in the table on the preceding page.

- Select the MHD panels needed for your system.
- Install the appropriate MHD panels on the right-hand side of the MME-3/MLE-6 backbox using the hardware supplied with each.

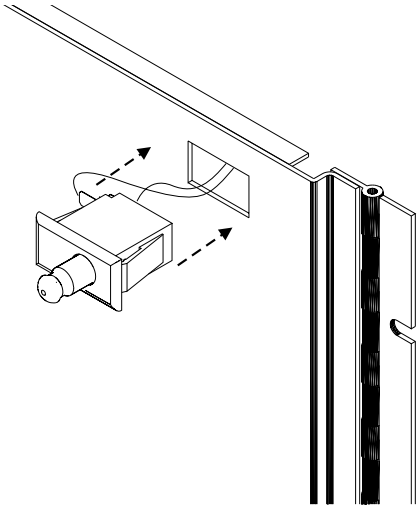

**Installing the Tamper Switch**



Technical Manuals Online! - http://www.tech-man.com

**VSM-1/VLM-1/VFM-1 SWITCH SETTINGS**

| Address | 6 5 4 3 2 1 | Address | 6 5 4 3 2 1 |
|---|---|---|---|
| Illegal | 0 0 0 0 0 0 | 16 | 0 X 0 0 0 0 |
| 1 | 0 0 0 0 0 X | 17 | 0 X 0 0 0 X |
| 2 | 0 0 0 0 X 0 | 18 | 0 X 0 0 X 0 |
| 3 | 0 0 0 0 X X | 19 | 0 X 0 0 X X |
| 4 | 0 0 0 X 0 0 | 20 | 0 X 0 X 0 0 |
| 5 | 0 0 0 X 0 X | 21 | 0 X 0 X 0 X |
| 6 | 0 0 0 X X 0 | 22 | 0 X 0 X X 0 |
| 7 | 0 0 0 X X X | 23 | 0 X 0 X X X |
| 8 | 0 0 X 0 0 0 | 24 | 0 X X 0 0 0 |
| 9 | 0 0 X 0 0 X | 25 | 0 X X 0 0 X |
| 10 | 0 0 X 0 X 0 | 26 | 0 X X 0 X 0 |
| 11 | 0 0 X 0 X X | 27 | 0 X X 0 X X |
| 12 | 0 0 X X 0 0 | 28 | 0 X X X 0 0 |
| 13 | 0 0 X X 0 X | 29 | 0 X X X 0 X |
| 14 | 0 0 X X X 0 | 30 | 0 X X X X 0 |
| 15 | 0 0 X X X X | 31 | 0 X X X X X |

X=Closed or ON  O=Open or OFF

**Setting the Module Addresses**

- Remove the module from its protective bag.
- Refer to the CSG-M configuration printout for the address of the module.
- Set the module address on switch S9 for a VSM-1 or a VLM-1, using switches SW1-SW6. For the VFM-1, use switch S5.
- After setting the address of each module, label each switch or LED. When viewed from the front panel of the VSM-1/VLM-1/VFM-1, the labels are on the left and the switches and LEDs are on the right.
- Remove the label strip from its slot and type or print a brief function identifier for each switch.
- After completing the label strip, insert it back into its slot.

**Mounting the VSM/VLM/VFM/VSB**

Before mounting each VSM-1/VLM-1/VFM-1 module, check the labels and the address setting of S9 or S5 on the back of the module.

Mount the VSM-1/VLM-1 modules in the Model MDH-3/-4/-5 panel, starting at the left-hand corner directly below the microphone. This position is recommended for important assigned functions, such as ALL CALL.

Group the modules together by function or by some logical order. VSM-1/VLM-1/VFM-1 modules do not need to be mounted in numeric order by address.

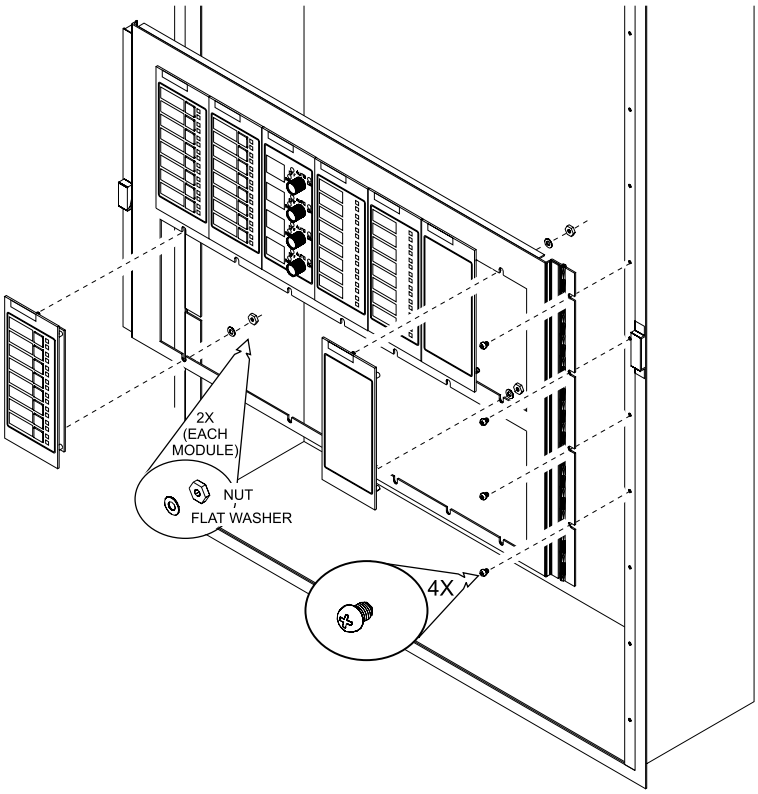


**Installing VSM-1 / VLM-1 / VFM-1 / VSB-1**



Technical Manuals Online! - http://www.tech-man.com

- Place the module in its designated position with the threaded studs through the appropriate mounting holes. Be sure connectors P1 and P2 are at the top of the module.
- Secure the module in place with the No. 8 washers and nuts provided. **Do not connect the cable until all the modules are mounted.**
- After mounting all VSM-1/VLM-1/VFM-1 modules, fill in any empty spaces on the MHD panels with VSB-1 Voice Switch Blank panels. Mount the VSB-1s in the same way as the VSM-1/VLM-1/VFM-1 modules.

#### Wiring the VSMs, VLMs and VFMs

Open the MHD panels so that you are looking at the back of the VSM-1s, the VLM-1s, the VFM-1s and the VSB-1s.

Connect the VSM-1/VLM-1/VFM-1 modules together with the cables provided. ***The cables are polarized; do not force them.***

- Start with the VSM-1/VLM-1/VFM-1 module at the far left on the top row. Refer to page 4-112 in the ***Connections and Ratings*** chapter for more information.
- Connect P1 of the first module to P2 of the module to its left, using the cable provided that has 4 inch wires, P/N 600-192237. Continue in the same manner until all the VSM-1/VLM-1/VFM-1 modules in the row are connected.
- Connect the cables on the lower row in the same way if any VSM-1/VLM-1/VFM-1 modules are there.
- Connect P1 of the module on the far left of the top row to P2 of the module on the far right of the bottom row. Use the 40 inch cable, Model MRRC-1 (P/N 600-192106), which is ordered separately. If the lower row has no modules mounted on it, omit this step.
- Connect P2 of the VSM-1/VLM-1/VFM-1 module at the far right in the top row to P4 of the TBM-2, using the 4 foot cable (P/N 600-192258). ***Remember, the cables are polarized, do not force them.*** (The TBM-2 module is located in the enclosure on the right side next to the MMB-1/-2 or the PSR-1.)
- Route the cable wires across the hinge to the back of the enclosure. Do not fasten the cable with a cable anchor until all wiring is complete.

### General Instructions for Installing Plug-in Modules into the MOM

Plug-in modules are classified as either half-width or full-width and are installed as follows:

#### Half-Width Modules

There are four available slots on the MOM-4 and two available slots on the MOM-2 for half-width modules. The position the half-width module is in determines which terminal blocks are available: TB1, TB2, TB3, or TB4 on the MOM-4 and TB1 or TB3 on the MOM-2.

Each half-width module is shipped with one card guide to add to the MOM before it can be installed. Choose the position for the card guide according to which terminal block you wish to use.



Technical Manuals Online! - http://www.tech-man.com

**Full-Width Modules**

Full-width modules plug into two vertically aligned half-width slots, forming one full slot on the MOM. As many as two full-width modules may be plugged into a MOM-4 and one full-width module may be plugged into a MOM-2.

Each full-width module can be in either the left or right slots of the MOM-4. The position it is in determines whether the wiring is on TB1 or TB3 (for the right slot) or TB2 or TB4 (for the left slot) of the MOM-4.

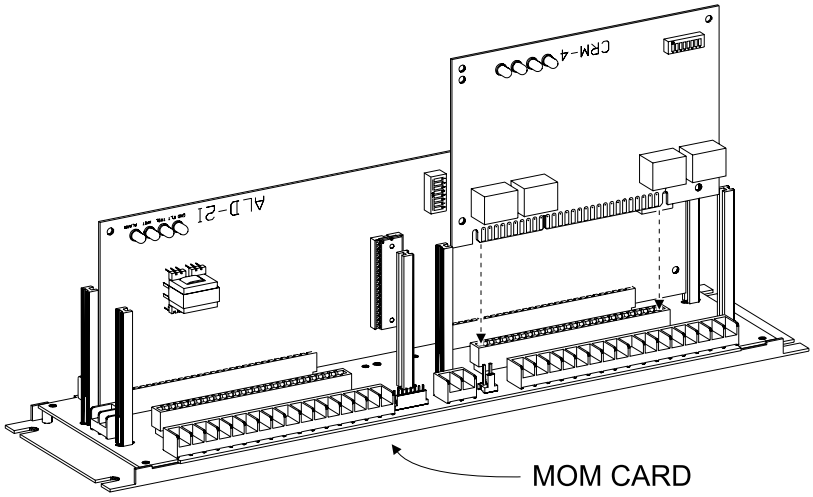


**Installing Plug-in Cards into the MOM**

**Plugging In the Modules**

Install each optional module one at a time according to the following steps:

- Set any switches and jumpers on each card according to the appropriate installation instructions that follow in this chapter (or the Installation Instructions shipped with each module).
- Be sure that all field wiring is completed and checked for shorts, opens, and other faults ***before*** installing each card. (Replace the card in its protective bag if the wiring is not complete.)
- Insert the module in the appropriate card guides on the MOM.
  **CAUTION:** At all times handle all plug-in cards with extreme care. When inserting or removing a card, be sure the position of the card is kept at right angles to the OMM board. Otherwise, the plug-in card can damage or displace other components.

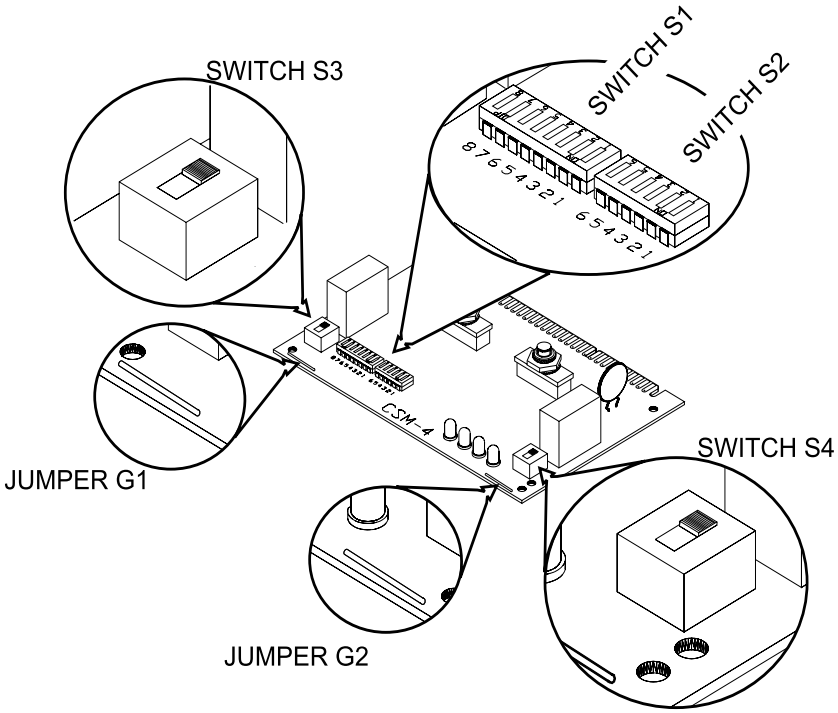


**Switches and Jumpers on the CSM-4**



Technical Manuals Online! - http://www.tech-man.com

- Press firmly until the card seats in the connector.

**NOTE:** All cards that are plugged into the MOM should face in the same direction, with the component side of the card toward TB1 and TB3 on the MOM, as illustrated on the previous page.

## Installing the CSM-4

The CSM-4 module plugs into one half-width slot on the MOM.

### Setting the Address on CSM-4

Before installing the CSM-4 in the MOM, you must set the network address, configure each circuit according to the CSG-M program [as audibles (NACs), municipal tie, leased line, or releasing service (NFPA 12A, NFPA 13, and NFPA 2001)], and set the degrade modes (trouble and alarm).

### Set the Network Address

The network address is set on switch S1. See the CSG-M printout for the proper address. Use the Network Address Programming Table at the end of this chapter to set the addresses for these switches.

### Set the Mode of Operation for Each Circuit

The CSM-4 has one programming slide switch and one jumper for each of its two circuits. Setting these slide switches and jumpers allows the selection of four possible modes of operation. These modes correspond with NFPA standards 72 Local (notification appliance circuit),

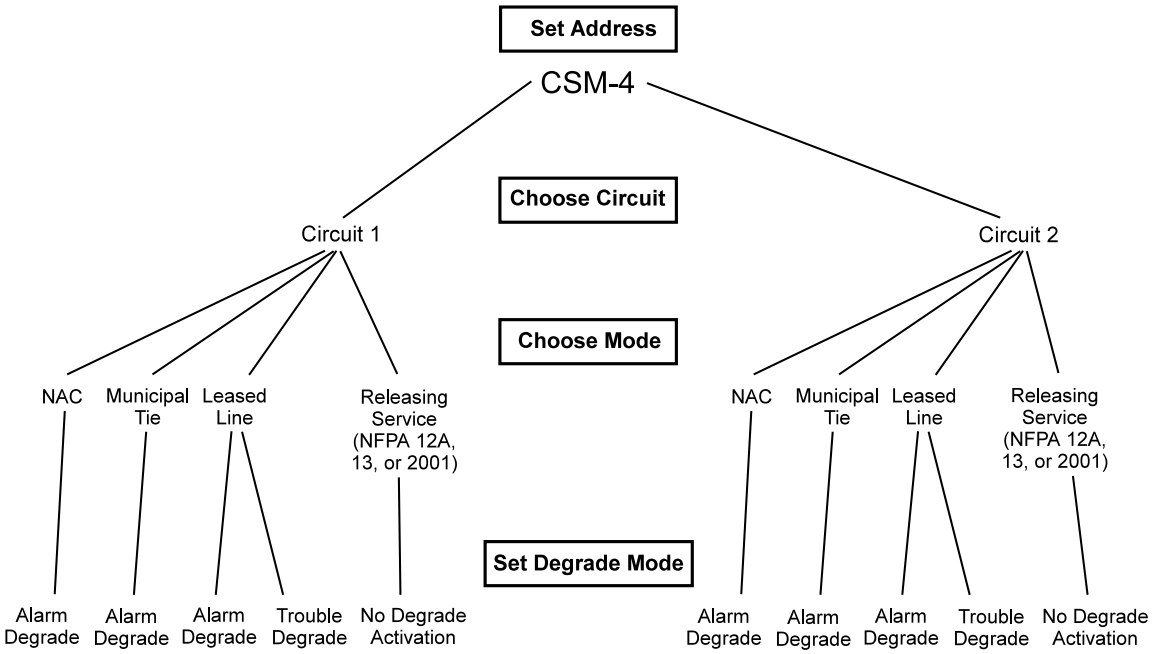


**Preparation for Installing the CSM-4**



Technical Manuals Online! - http://www.tech-man.com

**SETTING THE MODE OF OPERATION - CSM-4 (USING S3, S4 AND G1, G2)**

| For Circuit 1 | S3 Position | G1 |
|---|---|---|
| Notification Appliance Circuits | 1 | Not Cut |
| Municipal Tie (NFPA 72B) | 1 | Cut |
| Remote Station (NFPA 72C) | 2 | Not Cut |
| Releasing Service (NFPA 12A)* | 1 | Cut |
| Releasing Service (NFPA 13)* | 1 | Cut |
| Releasing Service (NFPA 2001)* | 1 | Cut |
| Illegal (Results in a trouble on CSM-4) | 2 | Cut |
| **For Circuit 2** | **S4 Position** | **G2** |
| Notification Appliance Circuits | 1 | Not Cut |
| Municipal Tie (NFPA 72B) | 1 | Cut |
| Remote Station (NFPA 72C) | 2 | Not Cut |
| Releasing Service (NFPA 12A)* | 1 | Cut |
| Releasing Service (NFPA 13)* | 1 | Cut |
| Releasing Service (NFPA 2001)* | 1 | Cut |
| Illegal (Results in a trouble on CSM-4) | 2 | Cut |

*CANADA ONLY: Do not cut jumpers G1 and G2 for NFPA 12A, NFPA 13, and NFPA 2001.

72 Municipal Tie, 72 Remote Station (leased line), and NFPA 12A, NFPA 13, and NFPA 2001 (releasing service).

Each circuit on the CSM-4 can be set independently for the type of operation desired. The table above shows how to set the switches and jumpers for circuits 1 and 2. The CSG-M printout shows the mode for each circuit.

**Set the Degrade Modes of Operation**

There are two sources of degrade activation, the degrade alarm bus and the degrade trouble bus. These two buses *become active ONLY when* the MXL communication network fails. Switch S2 on the CSM-4 sets the degrade mode of operation for each circuit.

Each circuit operates independently in the degrade mode. Switch S2, positions SW1 and SW2, determines the degrade mode of operation when the trouble bus activates. S2, positions SW3-SW6, determines the degrade mode of operation when the alarm bus activates.

**Degrade Trouble Activation**

The degrade trouble bus may ONLY be used when the circuit is used as a leased line **trouble** circuit (NFPA 72 Remote Station). When enabled, this trouble default mode ensures that a trouble is transmitted to the receiving station even when the MXL communication network fails.

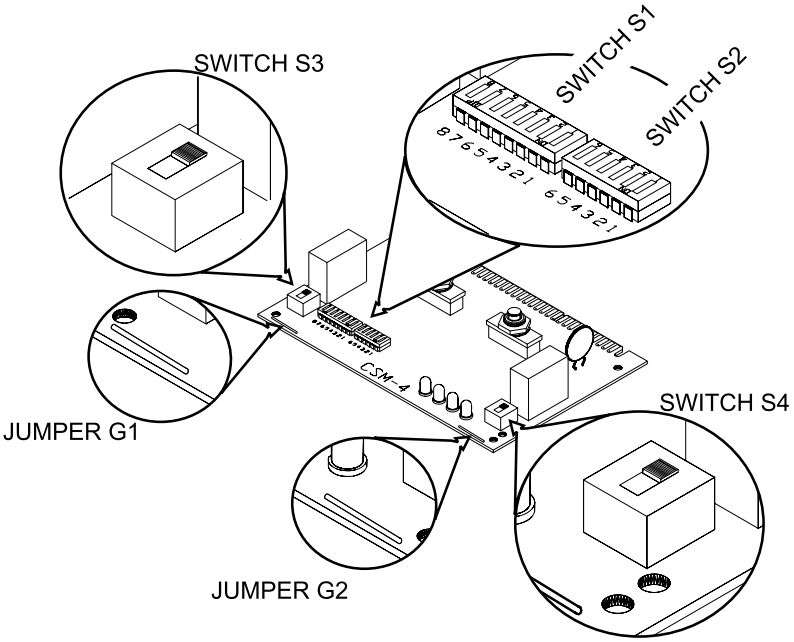


**Switches and Jumpers on the CSM-4**



Technical Manuals Online! - http://www.tech-man.com

Using the CSG-M printout, determine if either of the circuits is configured as a leased line **trouble**. The following table shows how to set DIP switch S2 (SW1 and SW2) to enable the degrade trouble activation for the desired circuit.

**SETTING THE DEGRADE TROUBLE MODES ON S2 - CSM-4**

| For Circuit 1 | SW1 |
|---|---|
| Leased Line Trouble | On (Closed) |
| No Trouble Activation | Off (Open) |
| **For Circuit 2** | **SW2** |
| Leased Line Trouble | On (Closed) |
| No Trouble Activation | Off (Open) |

NOTE: If circuit 1 or circuit 2 is not used for leased line trouble, switches SW1 or SW2 must be off (open).

**Degrade Alarm Activation**

Each circuit on the CSM-4 can be set with switch S2, positions SW3-SW6, to determine what happens when the degrade alarm bus activates. There are three alarm degrade modes. Each circuit can be set independently from the other. Determine which type of degrade mode you want for each circuit and set switch S2 (SW3-SW6) as shown in the table at the bottom of the page.

**SETTING THE DEGRADE ALARM MODES ON S2 - CSM-4**

| For Circuit 1 | SW4 | SW3 |
|---|---|---|
| OFF (No degrade activation) | Off (Open) | Off (Open) |
| CONTINUOUS (Active on degrade alarm) | Off (Open) | On (Closed) |
| 1 SEC. ON, 1 SEC. OFF (Infinite repeat) | On (Closed) | Off (Open) |
| DO NOT USE | On (Closed) | On (Closed) |
| **For Circuit 2** | **SW6** | **SW5** |
| OFF (No degrade activation) | Off (Open) | Off (Open) |
| CONTINUOUS (Active on degrade alarm) | Off (Open) | On (Closed) |
| 1 SEC. ON, 1 SEC. OFF (Infinite repeat) | On (Closed) | Off (Open) |
| DO NOT USE | On (Closed) | On (Closed) |

NOTE: When circuits are used for leased line *supervisory,* the alarm degrade modes must be set to OFF (Open).

**Releasing Service per NFPA 12A, NFPA 13, and NFPA 2001**

No degrade activation is allowed. Set all switch positions on switch S2 to OFF (open).

After the addresses are set, install the CSM-4 in the MOM, being sure that the module is riding in the card guides and is firmly seated in the card edge connector.

## Installing the CRM-4

The CRM-4 module plugs into one half-width slot on the MOM.

**Setting the Address on the CRM-4**

Before the CRM-4 is installed in the MOM, set the network address on switch S1 to the address selected in the CSG-M. Use the Network Address Programming Table at the end of this chapter to set the address for this switch.

After the address is set, install the CRM-4 in the MOM, being sure that the module is riding in the card guides and is firmly seated in the card edge connector.

**Terminal Block Cover**

The CRM-4 is shipped with a protective cover for the MOM terminal block used for that CRM-4 installation. To install this cover, remove the screw and clamp assembly from position 8 on the MOM terminal block used. Place the cover over the terminal block and fasten it into position 8 with the nylon thumb screw provided.



Technical Manuals Online! - http://www.tech-man.com

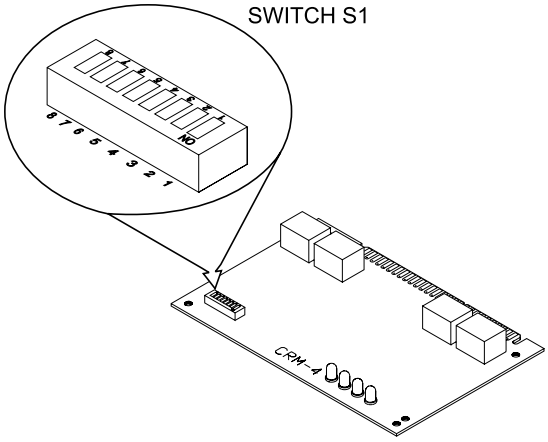


**Switch S1 on the CRM-4**

## Installing the CZM-4

The CZM-4 module plugs into a full-width slot on the MOM.

### Setting the Address on the CZM-4

Before installing the CZM-4 in the MOM, set the network address on switch S1. Refer to the CSG-M configuration printout for the address of the module. Use the Network Address Programming Table at the end of this chapter to set the address for this switch.

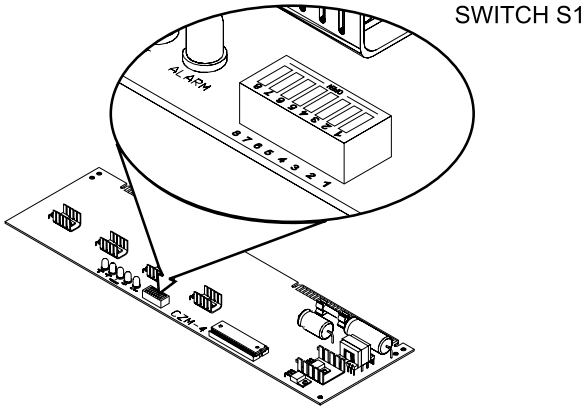


**Switch S1 on the CZM-4**

After the address is set, install the CZM-4 in the MOM, being sure that the module is riding in the card guides and is firmly seated in the card edge connector.

## Installing the ALD-2I

The ALD-2I module plugs into a full-width slot on the MOM.

If the MMB-1/-2 firmware revision level is 3.2 or higher, cut jumper G2. If the level is below 3.2, **do not cut it**.

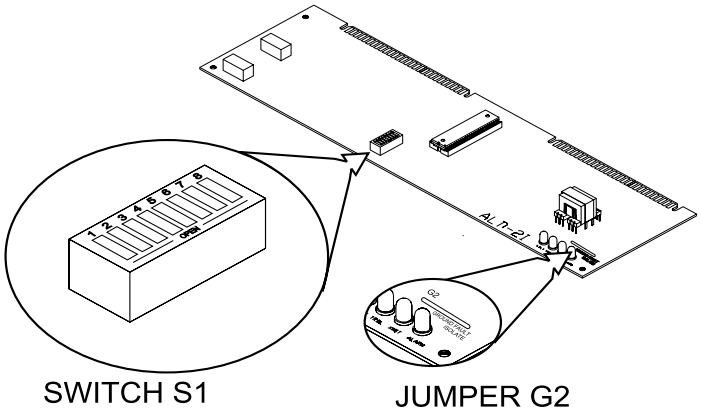


**Switch S1 and Jumper G2 on the ALD-2I**

### Setting the Address on the ALD-2I

Before the ALD-2I is installed in the MOM, set the network address on switch S1 to the lower of the two corresponding addresses selected in the CSG-M. (The lower address must be odd.) Use the Network Address Programming Table at the end of this chapter to set the address for this switch.



Technical Manuals Online! - http://www.tech-man.com

After the address is set, install the ALD-2I in the MOM, being sure that the module is riding in the card guides and is firmly seated in the card edge connector. Eliminate all troubles from each ALD-2I before installing the next one.

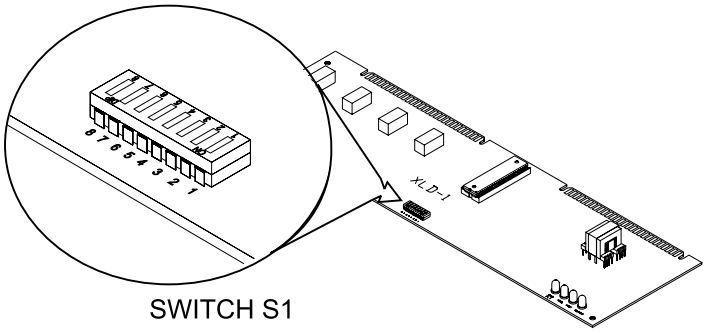


**Switch S1 on the XLD-1**

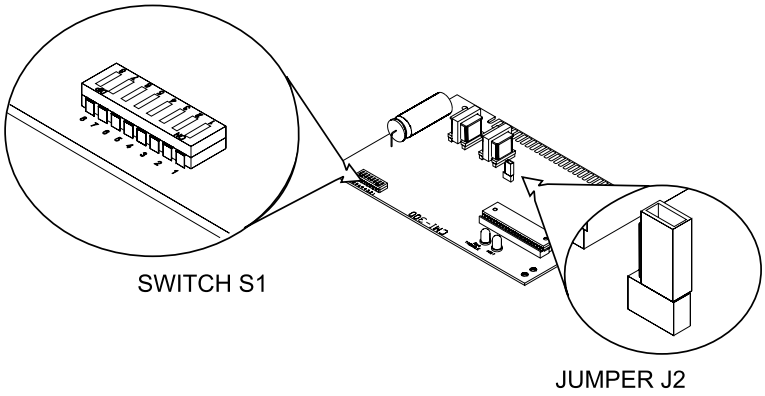


**Switch S1 and Jumper J2 on the CMI-300**

## Installing the XLD-1

The XLD-1 module plugs into a full-width slot on the MOM.

### Setting the Address on the XLD-1

Before installing the XLD-1 in the MOM, set the network address on switch S1. Set it to the lowest of the four corresponding addresses selected for it in the CSG-M. (The lowest address must be odd.) Use the Network Address Programming Table at the end of this chapter to set the address for this switch.

After the address is set, install the XLD-1 in the MOM, being sure that the module is riding in the card guides and is firmly seated in the card edge connector.

## Installing the CMI-300

The CMI-300 module plugs into one half-width slot on the MOM.

Check that there is a jumper installed for Jumper J2, pins 1 and 2.

### Setting the Address on the CMI-300

Before installing the CMI-300 in the MOM, set the network address on switch SW1. Use the Network Address Programming Table at the end of this chapter to set the address for this switch.

After the address is set, install the CMI-300 in the MOM, being sure that the module is riding in the card guides and is firmly seated in the card edge connector.



Technical Manuals Online! - http://www.tech-man.com

## Installing the NIM-1R

The NIM-1R module plugs into a full-width slot on the MOM.

### Setting the Addresses on the NIM-1R

Before installing the NIM-1R in the MOM, set S1 and S2.

Use S1 to set the MXL network address. Set this switch according to the address where the NIM-1R is installed in the MXL's network map. Refer to the CSG-M configuration printout for the address of the module. Use the Network Address Programming Table at the end of this chapter to set the address for this switch.

Use S2 to set either the panel number for networked systems or to select FSI or AnaLASER operation. Refer to the following tables for panel, FSI and AnaLASER settings.

- When installing the NIM-1R in a networked system, set the panel number to agree with the panel number for the NIM-1R assigned to the MXL System in CSG-M.
- Switch position 8 selects Style 4 or Style 7 operation for the NIM-1R network.
- When installing the NIM-1R for FSI operation, set the switch to all open (or OFF).

**FSI PROGRAMMING**

| Address | 8 7 6 5 4 3 2 1 |
|---|---|
| FSI | 0 0 0 0 0 0 0 0 |

0=Open or OFF

- When installing the NIM-1R for AnaLASER connection, set the switch as follows:

**AnaLASER PROGRAMMING**

| Address | 8 7 6 5 4 3 2 1 |
|---|---|
| AnaLASER | X 0 0 0 0 0 0 0 |

0=Open or OFF X=Closed or ON

After the addresses are set, install the NIM-1R in the MOM, being sure that the module is riding in the card guides and is firmly seated in the card edge connector.

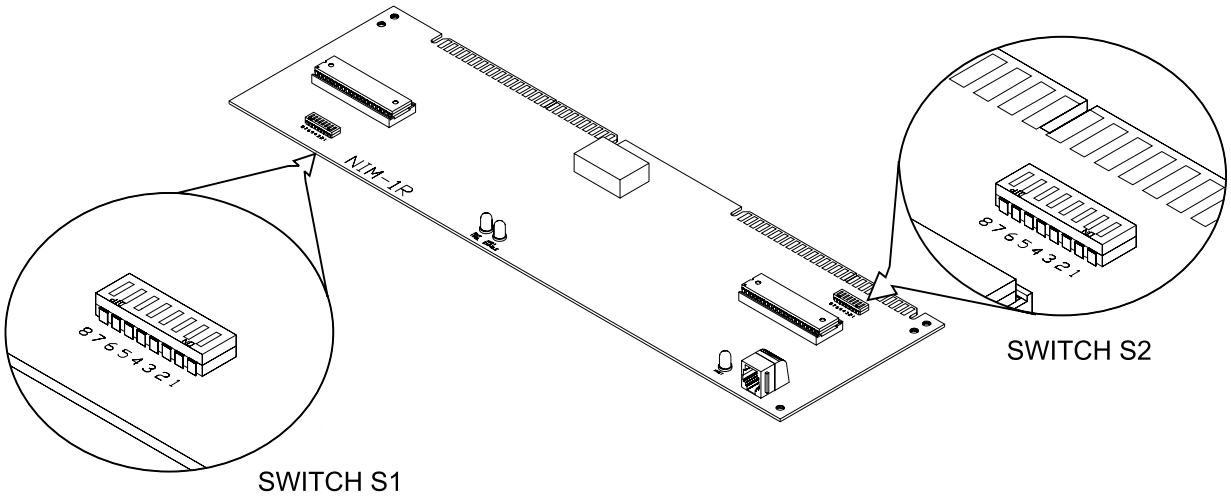


**Switches S1 and S2 on the NIM-1R**



Technical Manuals Online! - http://www.tech-man.com

**NIM-1R PANEL NUMBER PROGRAMMING (S2)**

| Address | 8 7 6 5 4 3 2 1 | Address | 8 7 6 5 4 3 2 1 | Address | 8 7 6 5 4 3 2 1 | Address | 8 7 6 5 4 3 2 1 |
|---|---|---|---|---|---|---|---|
| 000 | R O O O O O O O | 016 | S O O X O O O O | 032 | S O X O O O O O | 048 | S O X X O O O O |
| 001 | S O O O O O O X | 017 | S O O X O O O X | 033 | S O X O O O O X | 049 | S O X X O O O X |
| 002 | S O O O O O X O | 018 | S O O X O O X O | 034 | S O X O O O X O | 050 | S O X X O O X O |
| 003 | S O O O O O X X | 019 | S O O X O O X X | 035 | S O X O O O X X | 051 | S O X X O O X X |
| 004 | S O O O O X O O | 020 | S O O X O X O O | 036 | S O X O O X O O | 052 | S O X X O X O O |
| 005 | S O O O O X O X | 021 | S O O X O X O X | 037 | S O X O O X O X | 053 | S O X X O X O X |
| 006 | S O O O O X X O | 022 | S O O X O X X O | 038 | S O X O O X X O | 054 | S O X X O X X O |
| 007 | S O O O O X X X | 023 | S O O X O X X X | 039 | S O X O O X X X | 055 | S O X X O X X X |
| 008 | S O O O X O O O | 024 | S O O X X O O O | 040 | S O X O X O O O | 056 | S O X X X O O O |
| 009 | S O O O X O O X | 025 | S O O X X O O X | 041 | S O X O X O O X | 057 | S O X X X O O X |
| 010 | S O O O X O X O | 026 | S O O X X O X O | 042 | S O X O X O X O | 058 | S O X X X O X O |
| 011 | S O O O X O X X | 027 | S O O X X O X X | 043 | S O X O X O X X | 059 | S O X X X O X X |
| 012 | S O O O X X O O | 028 | S O O X X X O O | 044 | S O X O X X O O | 060 | S O X X X X O O |
| 013 | S O O O X X O X | 029 | S O O X X X O X | 045 | S O X O X X O X | 061 | S O X X X X O X |
| 014 | S O O O X X X O | 030 | S O O X X X X O | 046 | S O X O X X X O | 062 | S O X X X X X O |
| 015 | S O O O X X X X | 031 | S O O X X X X X | 047 | S O X O X X X X | 063 | S O X X X X X X |
| --- | -------- | --- | -------- | --- | -------- | 064 | S X O O O O O O |

S=Closed selects Style 7 O=Open or OFF R=Closed selects AnaLASER
S=Open selects Style 4 X=Closed or ON R=Open selects FSI

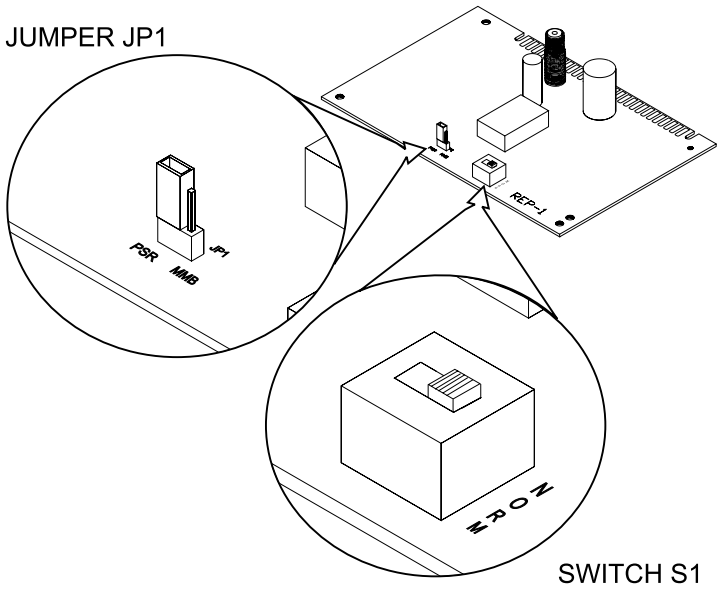


**Switch S1 and Jumper JP1 on the REP-1**

## Installing the REP-1

There is one switch (S1) and one jumper (JP1) on the REP-1 that must be set before installing the REP-1 in the MOM module.

### Setting the Switch on REP-1

Select the right-side position (NORM) of switch S1 when the REP-1 is used as a repeater. **NOTE:** Do not use the left-side position.

### Selecting the Correct Position for the JP1 Jumper

The REP-1 provides electrical isolation between the local power supply and the RS-485 lines. The JP1 jumper on



Technical Manuals Online! - http://www.tech-man.com

the REP-1 has two positions relating to this feature—**PSR** and **MMB.**

- Select the *left-side position* **(PSR)** for the jumper if the REP-1 is installed in an enclosure with a PSR-1. This setting provides ground fault isolation for the system.
- Select the *right-side position* **(MMB)** for the jumper if the REP-1 is installed in an enclosure with an MMB-1/-2 so as to provide ground fault detection.

#### Checking Limits

Do not connect more than two REP-1s in series for proper operation of the network. **To be sure there are no more than two REP-1s in series, check that:**

- There are no more than two REP-1s between any MXL module and the MMB-1/-2,

**or**

- In an NIM-1R network, there are no more than two REP-1s between any pair of NIM-1Rs in the network.

### Installing the NET-7 into the MOM

Decide whether to install the NET-7 in a PSR-1 (refer to page 2-6) or in the enclosure with the MMB-1/-2. The NET-7 module plugs into one half-width slot on the MOM.

#### Setting the Address on the NET-7

Set the network address for the NET-7 using switch S1. Use the Network Address Programming Table at the end of this chapter to set the address for this switch. Be sure that the address agrees with the CSG-M network map.

Determine whether the communication mode is Style 4 or Style 7. Place the shorting jumper on P3 to agree with the style selected.

After setting the address and jumper, install the NET-7 in the MOM, being sure that the module is riding in the card guides and is firmly seated in the card edge connector.

### Installing the NET-7M into the MOM

Decide whether to install the NET-7M in a PSR-1 (refer to page 2-7) or in the enclosure with the MMB-1/-2. The NET-7M module plugs into one half-width slot on the MOM.

Install the NET-7M in the MOM, being sure that the module is riding in the card guides and is firmly seated in the card edge connector.

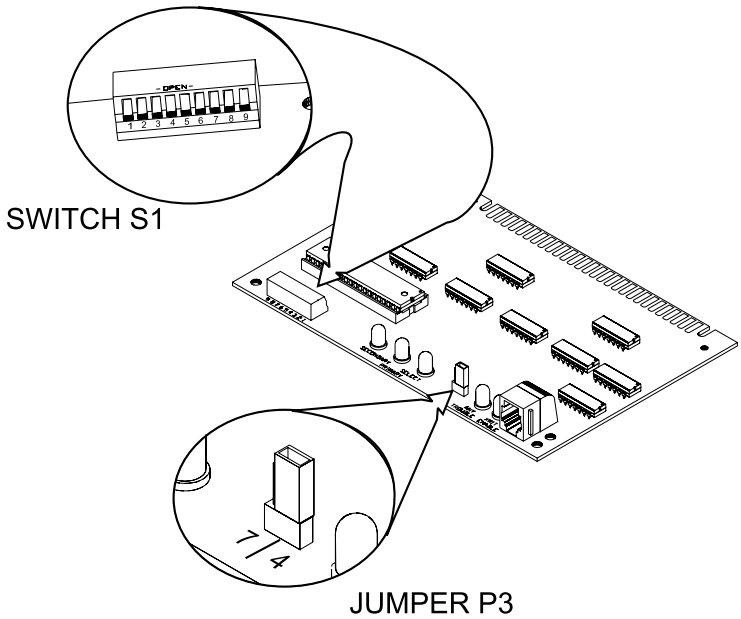


**Switch S1 and Jumper P3 on the NET-7**



Technical Manuals Online! - http://www.tech-man.com

## General Instructions for Installing Plug-in Modules into the OMM

Plug-in modules are classified as either half-width or full-width and are installed as follows:

### Half-Width Modules

There are four available slots on the OMM-1 and two available slots on the OMM-2 for half-width modules. The position the half-width module is in determines which terminal blocks are available: TB2, TB3, TB4, or TB5 on the OMM-1 and TB4 or TB5 on the OMM-2.

### Full-Width Modules

Full-width modules plug into two vertically aligned half-width slots, forming one full slot on the OMM. As many as two full-width modules may be plugged into an OMM-1 and one full-width module may be plugged into an OMM-2.

Each full-width module can be in either the left or right slots of the OMM-1. The position it is in determines whether the wiring is on TB2 or TB3 (for the right slot) or TB4 or TB5 (for the left slot) of the OMM-1.

### Plugging in the Modules

Install each optional module one at a time as follows:

- Remove the card from its protective bag. **Do not touch the gold plated card edge.**
- Set any switches on each card according to the appropriate installation instructions that follow in this chapter (or the Installation Instructions shipped with each module).
- Place the user key from the installation kit in the OMM card edge connector selected for the module. This prevents the installation of any card type other than the intended one in that particular slot. Two other keys that prevent reverse installation of each card are already factory installed in the OMM edge connectors.

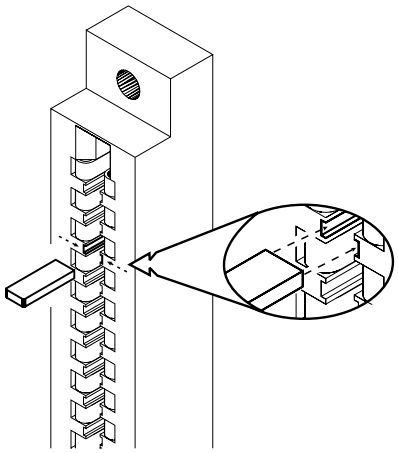

**Installing the User Key into the OMM Card Edge Connector**

- Be sure that all field wiring is completed and checked for shorts, opens, and other faults ***before*** installing each card. (Replace the card in its protective bag if the wiring is not complete.)
- Insert the module in the appropriate card guides on the OMM.
  **CAUTION:** At all times handle all plug-in cards with extreme care. When inserting or removing a card, be sure the position of the card is kept at right angles to the OMM board. Otherwise, the plug-in card



Technical Manuals Online! - http://www.tech-man.com

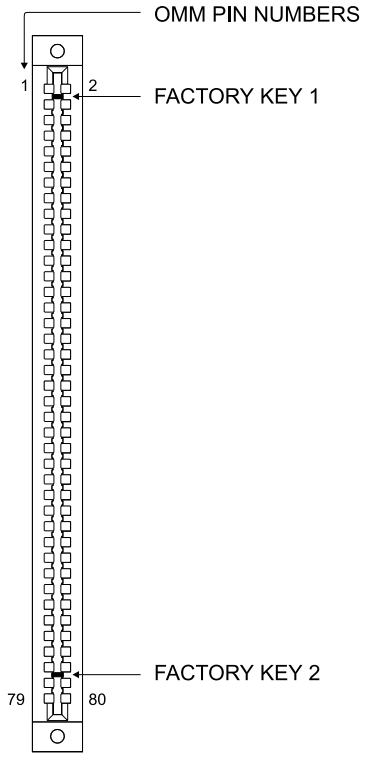


**Location of the Factory Installed Keys in the OMM Card Edge Connector**

can damage or displace other components.

- Press firmly until the card seats in the connector.

**NOTE:** All cards that are plugged into the OMM must be positioned so that the component side of the board faces toward the outer edges of the OMM (toward the 22-position terminal block where the wiring terminates), as illustrated.

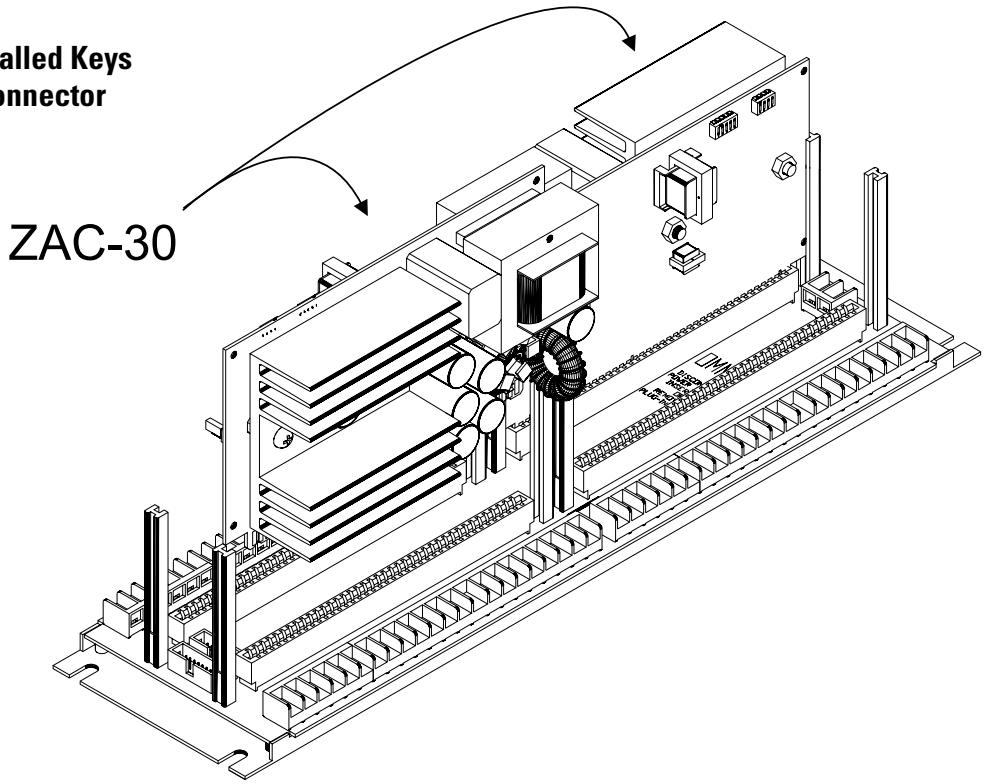


**Installing Plug-in Cards into the OMM**



Technical Manuals Online! - http://www.tech-man.com

## Installing the ASC-1

The ASC-1 plugs into a half-width slot on the OMM and comes with an installation kit that consists of the following:

- One user key

### Setting the Addresses on the ASC-1

Before installing the ASC-1 in the OMM, set S1 and S2. Use S2, DIP switches SW1-SW4 to set the network address. Refer to the CSG-M configuration printout for the address of the module. Use the *ASC-1 S2 Settings* table to set the address for this switch.

Set switch S1 for proper amplifier supervision of the ASC-1. Check the system wiring diagram for amplifier and riser assignments. Set switch S1 DIP switches SW1 - SW6 using the *ASC-1 S1 Settings* table.

If this ASC-1 card supervises the backup amplifier, SW7 on switch S1 must be CLOSED or ON. If one backup amplifier is shared by more than one ASC-1 card, SW7 of S1 must be OPEN or OFF on all ASC-1 cards except the one supervising the backup amplifier.

**ASC-1 S1 SETTINGS**

| Amplifier 1 uses S1, switches SW1 and SW2 | | |
|---|---|---|
| SW2 | SW1 | Amplifier Input |
| O | O | Riser 1 |
| O | X | Riser 2 |
| X | O | Riser 3 |
| X | X | No amplifier connected |
| Amplifier 2 uses S1, switches SW3 and SW4 | | |
| SW4 | SW3 | Amplifier Input |
| O | O | Riser 1 |
| O | X | Riser 2 |
| X | O | Riser 3 |
| X | X | No amplifier connected |
| Amplifier 3 uses S1, switches SW5 and SW6 | | |
| SW6 | SW5 | Amplifier Input |
| O | O | Riser 1 |
| O | X | Riser 2 |
| X | O | Riser 3 |
| X | X | No amplifier connected |

X=Closed or ON  O=Open or OFF

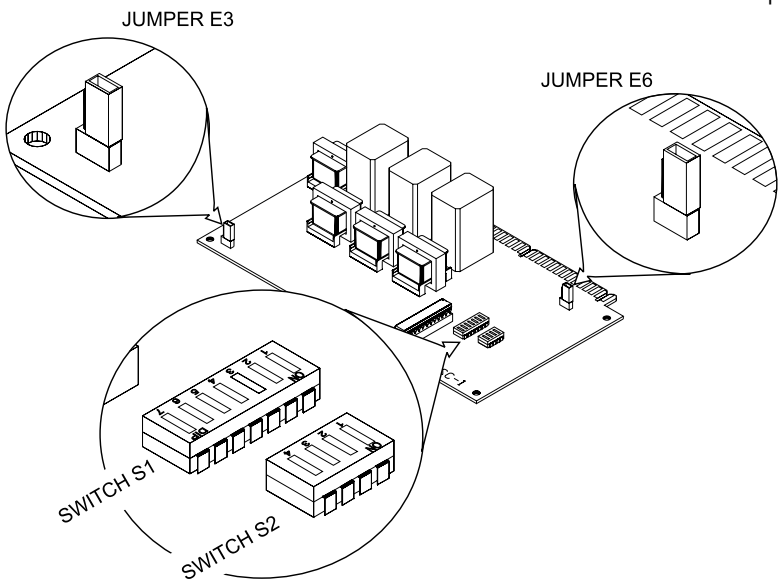


**Switches S1 and S2 and Jumpers E3 and E6 on the ASC-1**

### Setting Jumper E3

Jumper E3 sets the ASC-1 for 25.2V RMS or 70.7V RMS amplifier output.

**To set the jumper for 25.2V RMS,** place the E3 jumper in the left-hand position (gold-plated edge facing as shown).

**To set the jumper for 70.7V RMS,** place the E3 jumper in the right-hand position (gold-plated edge facing as shown).



Technical Manuals Online! - http://www.tech-man.com

**ASC-1 S2 SETTINGS**

| Address | 4 3 2 1 | Address | 4 3 2 1 |
|---|---|---|---|
| ILLEGAL | O O O O | 008 | X O O O |
| 001 | O O O X | 009 | X O O X |
| 002 | O O X O | 010 | X O X O |
| 003 | O O X X | 011 | X O X X |
| 004 | O X O O | ILLEGAL | X X O O |
| 005 | O X O X | ILLEGAL | X X O X |
| 006 | O X X O | ILLEGAL | X X X O |
| 007 | O X X X | ILLEGAL | X X X X |

X=Closed or ON O=Open or OFF

**Setting Jumper E6**

If the backup amplifier is an EL-410C/D, place jumper E6 in the right-hand position. This connects the backup amplifier input negative side to the MXLV power supply.

Place the user key from the installation kit in the OMM-1 card edge connector for the ASC-1 (between positions 25-26 and 27-28).

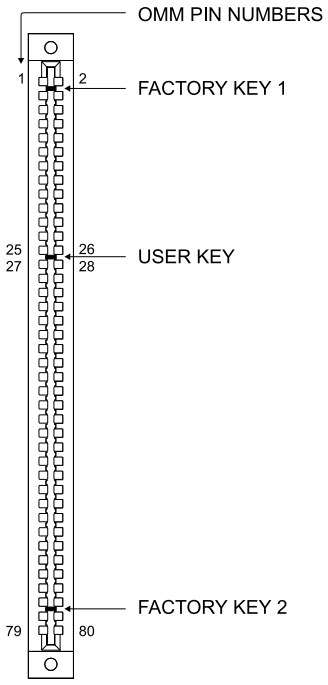


**Location of the User Key for the ASC-1**

**If one backup amplifier is shared by more than one ASC-1,** connect terminal 3 of the terminal block of the primary ASC-1 to terminal 3 of the terminal blocks of all of the other ASC-1 cards that share the same backup amplifier.

**If the system has NO backup amplifier**, place a jumper across terminals 3 and 4.

After the addresses and jumpers are set, install the ASC-1 in the OMM, being sure that the module is riding in the card guides and is firmly seated in the card edge connector.

## Installing the ASC-2

The ASC-2 plugs into a half-width slot on the OMM and comes with an installation kit that consists of the following:

- One end of line resistor, P/N 140-820405
- One user key

**Setting the Addresses on the ASC-2**

Before installing the ASC-2 in the OMM, set S1 and S2. Use S1, DIP switches SW1-SW4 to set the network address. Refer to the CSG-M configuration printout for the address of the module. Use the *ASC-2 S1 Settings* table to set the address for this switch.

Set switch S2 for proper amplifier supervision of the ASC-2. Check the system wiring diagram for amplifier and riser assignments. Set switch S2 DIP switches SW1 and SW2 using the *ASC-2 S2 Settings* table. SW3 and SW4 on S2 are not used.



Technical Manuals Online! - http://www.tech-man.com

**ASC-2 S1 SETTINGS**

| Address | 4 3 2 1 | Address | 4 3 2 1 |
|---|---|---|---|
| ILLEGAL | O O O O | 008 | X O O O |
| 001 | O O O X | 009 | X O O X |
| 002 | O O X O | 010 | X O X O |
| 003 | O O X X | 011 | X O X X |
| 004 | O X O O | ILLEGAL | X X O O |
| 005 | O X O X | ILLEGAL | X X O X |
| 006 | O X X O | ILLEGAL | X X X O |
| 007 | O X X X | ILLEGAL | X X X X |

X=Closed or ON O=Open or OFF

**ASC-2 S2 SETTINGS**

| | Amplifier Input | | | |
|---|---|---|---|---|
| | Riser 1 | Riser 2 | Riser 3 | ILLEGAL |
| SW1 | O | X | O | X |
| SW2 | O | O | X | X |

| | |
|---|---|
| SW3 | NOT USED |
| SW4 | NOT USED |

| | |
|---|---|
| SW5 | X = Enable backup amplifier supervision<br>O = Disable backup amplifier supervision |

X=Closed or ON O=Open or OFF

If this ASC-2 card supervises the backup amplifier, SW5 on switch S2 must be CLOSED or ON. If one backup amplifier is shared by more than one ASC-2 card, SW5 of S2 must be OPEN or OFF on all ASC-2 cards except the one supervising the backup amplifier.

**Setting Jumpers J1 and J2**

Jumper J1 sets the ASC-2 for 25.2V RMS or 70.7V RMS amplifier output.

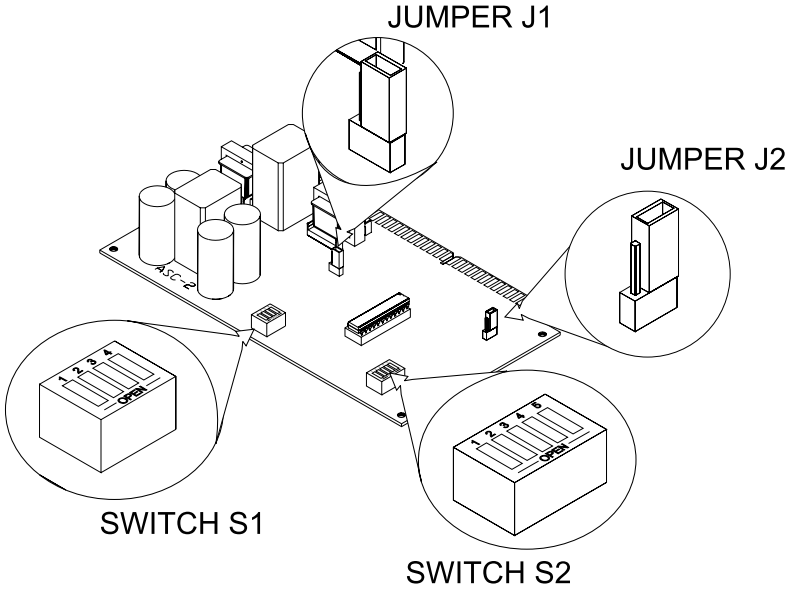


**Switches S1 and S2 and Jumpers J1 and J2 on the ASC-2**

**To set the jumper for 25.2V RMS,** place the J1 jumper in the left-hand position (gold-plated edge facing as shown). Check that fuse F1 is 6A.

**To set the jumper for 70.7V RMS,** place the J1 jumper in the right-hand position (gold plated edge facing as shown). Check that fuse F1 is 2A.

If the backup amplifier is an EL-410C/D, place jumper J2 in the upper position (gold plated edge facing as shown). This connects the backup amplifier input negative side to the MXLV power supply.

If power limiting is required, use the PLC-4. Refer to ***Chapter 4 - Connections and Ratings*** for further information.

Place the user key from the installation kit in the OMM-1 card edge connector for the ASC-2 (between positions 29-30 and 31-32).

**If one backup amplifier is shared by more than one ASC-2,** connect terminal 3 of the terminal block of the primary ASC-2 to terminal 3 of the terminal blocks of all of the other ASC-2 cards that share the same backup amplifier.



Technical Manuals Online! - http://www.tech-man.com

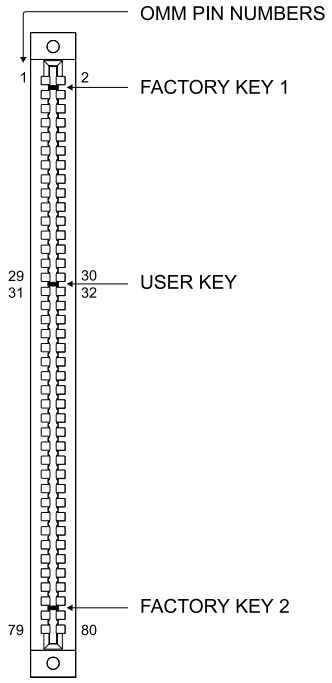


**Location of the User Key for the ASC-2**

**If the system has NO backup amplifier**, place a jumper across terminals 3 and 4.

After the addresses and jumpers are set, install the ASC-2 in the OMM, being sure that the module is riding in the card guides and is firmly seated in the card edge connector.

## Installing the OCC-1

The OCC-1 plugs into a half-width slot on the OMM and comes with an installation kit that consists of the following:

Four end of line resistors: Three - P/N 140-820396 (Audio Risers) and One -P/N 140-820390 (Telephone Riser)
One user key

### Setting the Address on the OCC-1

Before installing the OCC-1 in the OMM, set the address on S1. Use S1, DIP switches SW1-SW8 to set the network address. Refer to the CSG-M configuration printout for the address of the module. Use the Network Address Programming Table at the end of this chapter to set the address for this switch.

Switch S2 is not presently used, but it must be left in place.

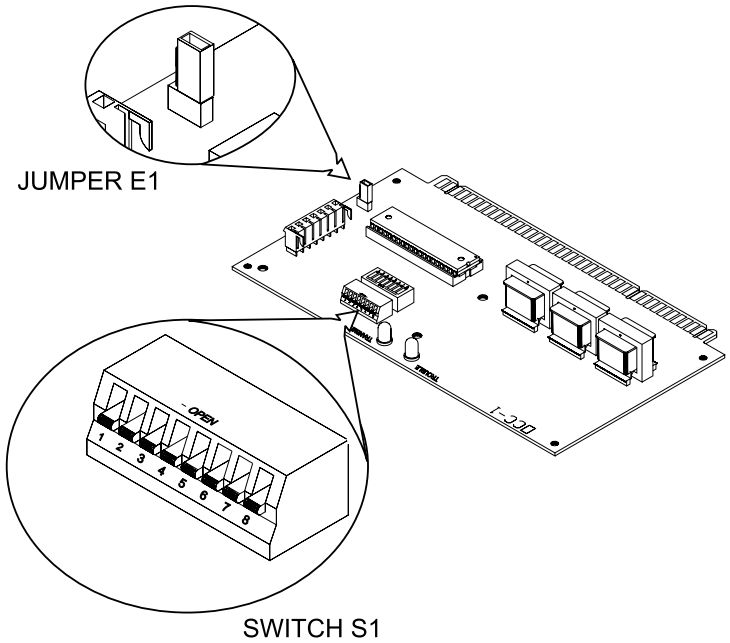


**Switch S1 and Jumper E1 on the OCC-1**

### Setting Jumper E1

**If the EL-410C/D amplifier is used**, place jumper E1 in the right-hand position. This connects the backup amplifier input negative side to the MXLV power supply.

Place the user key from the installation kit in the OMM-1 card edge connector for the OCC-1 (between positions 21-22 and 23-24).



Technical Manuals Online! - http://www.tech-man.com

After the addresses and jumpers are set, install the OCC-1 in the OMM, being sure that the module is riding in the card guides and is firmly seated in the card edge connector.

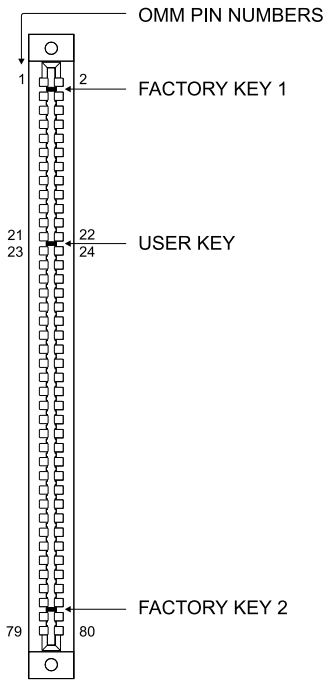


**Location of the User Key for the OCC-1**

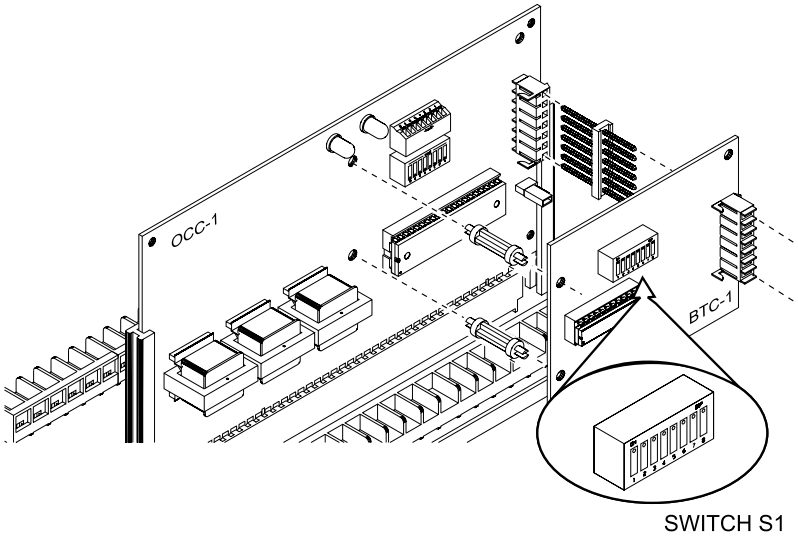


**Installing the BTC-1 on the OCC-1**

## Installing the BTC-1 on the OCC-1

The BTC-1 mounts on either the OCC-1 on P2 (to provide a default tone in degrade mode) or the ACM-1 on P6 (to provide backup of the two primary tones) with two snap-in type standoffs and a comb-like connector.

### Setting the Tones

Before installing the BTC-1 on the OCC-1, set the desired tones on switch S1 using DIP switches SW1-SW4 for the first tone selection and DIP switches SW5-SW8 for the second tone selection. Refer to the function section of the CSG-M configuration printout for the tones to be configured.

**BTC-1 TONE SWITCH SETTINGS**

| Setting | | Tone |
|---|---|---|
| ALERT<br>8 7 6 5 | EVAC<br>4 3 2 1 | |
| 0 0 0 0 | 0 0 0 0 | DO NOT USE |
| 0 0 0 X | 0 0 0 X | Chime |
| 0 0 X 0 | 0 0 X 0 | 2000 Hz |
| 0 0 X X | 0 0 X X | Slow Whoop |
| 0 X 0 0 | 0 X 0 0 | Yelp |
| 0 X 0 X | 0 X 0 X | Wail |
| 0 X X 0 | 0 X X 0 | California Code |
| 0 X X X | 0 X X X | 900 Hz Pulsed at 120 Pulses Per Minute |
| X 0 0 0 | X 0 0 0 | DO NOT USE |
| X 0 0 X | X 0 0 X | Horn |
| X 0 X 0 | X 0 X 0 | Temporal Code 3 |
| X 0 X X | X 0 X X | 900 Hz Pulsed at 30 Pulses Per Minute |
| X X 0 0 | X X 0 0 | Yeow |
| X X 0 X | X X 0 X | High/Low |
| X X X 0 | X X X 0 | DO NOT USE |
| X X X X | X X X X | 900 Hz Tone |

X=Closed or ON  0=Open or OFF



Technical Manuals Online! - http://www.tech-man.com

### Mounting the BTC-1

Install the standoffs and comb connector in the component side of the OCC-1.

## Installing the DMC-1

The DMC-1 plugs into a half-width slot on the OMM and comes with an installation kit that consists of the following:

- One user key

**WARNING:** The DMC-1 Digital Message Card has a 3V lithium battery installed for battery backup of static RAM memory (U5). This results in the DMC-1 Card being partially powered all the time. The DMC-1 must be handled with caution when it is removed from the protective package. Do not place the DMC-1 on conductive surfaces (metal, aluminum foil, etc.).

### Setting the Address on the DMC-1

Before installing the DMC-1 in the OMM, set the address on S1 and the recording mode on S2. Use S1, DIP switches SW1-SW8 to set the network address. Refer to the CSG-M configuration printout for the address of the module. Use the Network Address Programming Table at the end of this chapter to set the address for this switch.

Set the switches of DIP switch S2 to the OPEN or OFF position. Refer to the *DMC-1 Installation Instructions,* P/N 315-092692.

### Setting Jumper E1

Place jumper E1 in position 1-2.

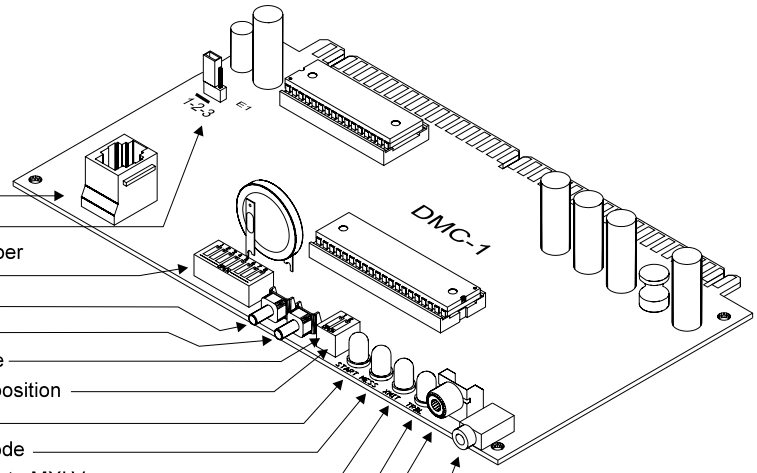


| Component | Use |
|---|---|
| P2 | Used in the factory only |
| E1 | Used to enable/disable recording |
| S1 | Used to set the M-NET address or the phrase number to be recorded |
| S4 | Used to start/stop playback |
| S3 | Used to start/stop recording |
| S2, sw1 | Used to put the DMC-1 into manual recording mode |
| S2, sw2 | Used in the factory only and should be in the OFF position |
| D9 | Indicates start/stop of recording or playback |
| D3 | Indicates that the DMC-1 is in manual recording mode |
| D2 | Indicates transmission on local M-NET from DMC-1 to MXLV |
| D1 | Turns on steady when DMC-1 cannot communicate with the MXLV on the local M-NET |
| J2 | Used to connect a source of audio signal (J2 is for auxiliary input) |
| J1 | Used to connect a source of audio signal (J1 is for microphone) |

**Components on the DMC-1**



Technical Manuals Online! - http://www.tech-man.com

Place the user key from the installation kit in the OMM-1 card edge connector for the DMC-1 (between positions 41-42 and 43-44).

After the address is set, install the DMC-1 in the OMM, being sure that the module is riding in the card guides and is firmly seated in the card edge connector.

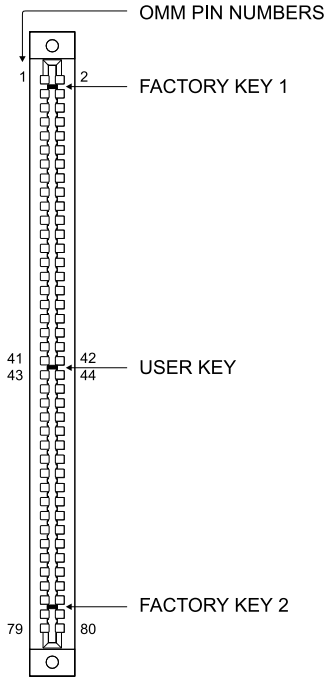


**Location of the User Key for the DMC-1**

## Installing the ZC1-8B

The ZC1-8B plugs into a half-width slot on the OMM and comes with an installation kit that consists of the following:

- Eight end of line resistors, P/N 140-820405
- Three 2A, 250V fuses, P/N 105-292199
- Eight 25V fuses, P/N 105-291200
- One user key

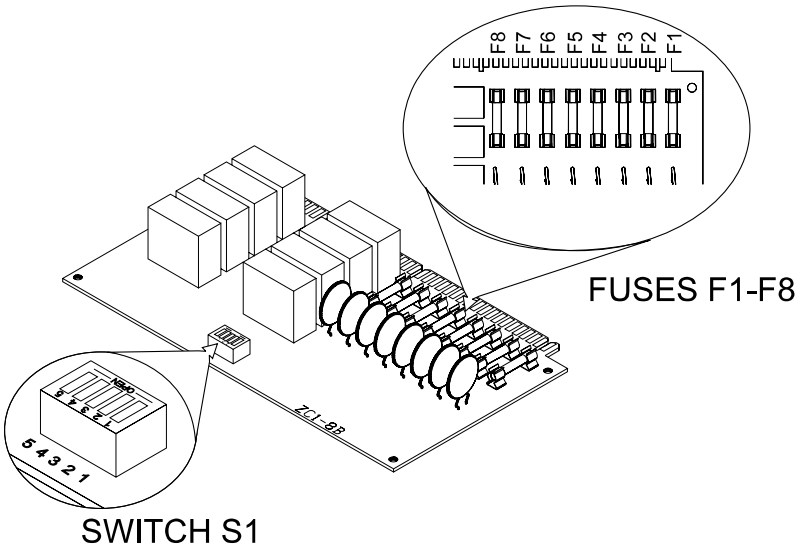


**Switch S1 and Fuses F1-F8 on the ZC1-8B**

### Setting the Address on the ZC1-8B

Before installing the ZC1-8B in the OMM, set the address on S1, DIP switches SW1-SW4. (SW5 is not used at this time.) Refer to the CSG-M configuration printout for the address of the module. Use the *ZC1-8B S1 Settings* table to set the address for this switch.

### ZC1-8B Fuses

The ZC1-8B comes with 70V fuses, P/N 105-291202, installed at the factory.

**For 25.2V Installations,** remove the 70V fuses, F1-F8, and install the 25V fuses, P/N 105-291200, found in the installation kit.



Technical Manuals Online! - http://www.tech-man.com

**ZC1-8B S1 SETTINGS**

| Address | 5 4 3 2 1 | Address | 5 4 3 2 1 |
|---|---|---|---|
| ILLEGAL | 0 0 0 0 0 | 008 | 0 X 0 0 0 |
| 001 | 0 0 0 0 X | 009 | 0 X 0 0 X |
| 002 | 0 0 0 X 0 | 010 | 0 X 0 X 0 |
| 003 | 0 0 0 X X | 011 | 0 X 0 X X |
| 004 | 0 0 X 0 0 | ILLEGAL | 0 X X 0 0 |
| 005 | 0 0 X 0 X | ILLEGAL | 0 X X 0 X |
| 006 | 0 0 X X 0 | ILLEGAL | 0 X X X 0 |
| 007 | 0 0 X X X | ILLEGAL | 0 X X X X |

X=Closed or ON  0=Open or OFF

Place the user key from the installation kit in the OMM-1 card edge connector for the ZC1-8B (between positions 37-38 and 39-40).

After the address is set, install the ZC1-8B in the OMM, being sure that the module is riding in the card guides and is firmly seated in the card edge connector.

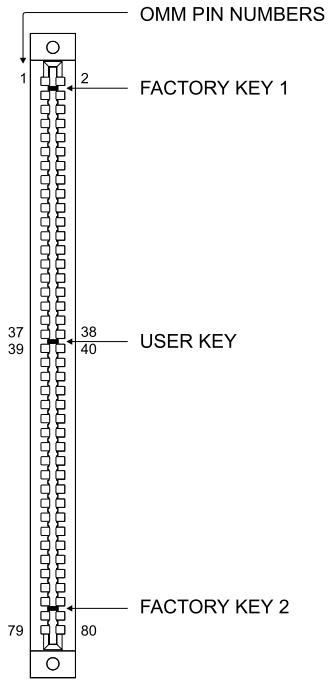


**Location of the User Key for the ZC1-8B**

## Installing the ZC2-8B

The ZC2-8B plugs into a half-width slot on the OMM and comes with an installation kit that consists of the following:

- Eight end of line resistors, P/N 140-820405
- One 2A, 250V fuse, P/N 105-292199
- Eight 25V fuses, P/N 105-291200
- One user key

### Setting the Address on the ZC2-8B

Before installing the ZC2-8B in the OMM, set the address on S1, DIP switches SW1-SW4. Refer to the CSG-M configuration printout for the address of the module. Use the *ZC2-8B S1 Settings* table to set the address for this switch.

### ZC2-8B Fuses

The ZC2-8B comes with 70V fuses, P/N 105-291202, installed at the factory.

**For 25.2V Installations,** remove the 70V fuses, F1-F8, and install the 25V fuses, P/N 105-291200, found in the installation kit.

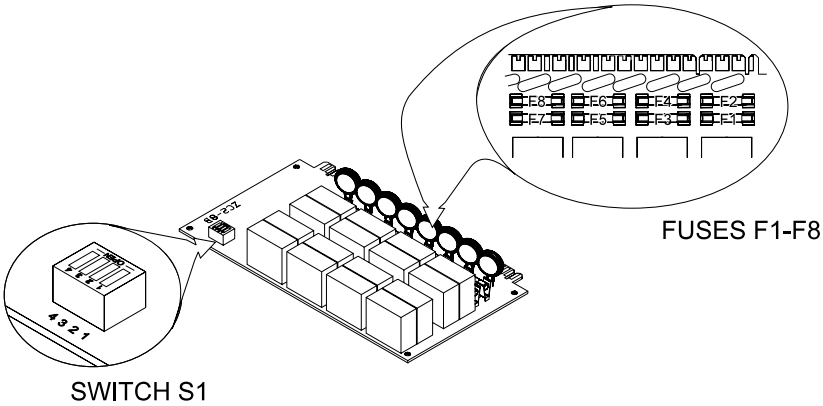


**Switch S1 and Fuses F1-F8 on the ZC2-8B**



Technical Manuals Online! - http://www.tech-man.com

ZC2-8B S1 SETTINGS

| Address | 4 3 2 1 | Address | 4 3 2 1 |
|---|---|---|---|
| ILLEGAL | O O O O | 008 | X O O O |
| 001 | O O O X | 009 | X O O X |
| 002 | O O X O | 010 | X O X O |
| 003 | O O X X | 011 | X O X X |
| 004 | O X O O | ILLEGAL | X X O O |
| 005 | O X O X | ILLEGAL | X X O X |
| 006 | O X X O | ILLEGAL | X X X O |
| 007 | O X X X | ILLEGAL | X X X X |

X=Closed or ON O=Open or OFF

Place the user key from the installation kit in the OMM-1 card edge connector for the ZC2-8B (between positions 9-10 and 11-12).

After the address is set, install the ZC2-8B in the OMM, being sure that the module is riding in the card guides and is firmly seated in the card edge connector.

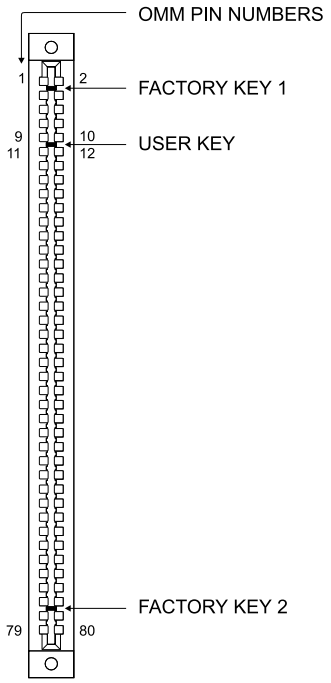


**Location of the User Key for the ZC2-8B**

## Installing the ZC2-4AB

The ZC2-4AB plugs into a half-width slot on the OMM and comes with an installation kit that consists of the following:

- Four end of line resistors, P/N 140-820405
- One 2A, 250V fuse, P/N 105-292199
- Four 25V fuses, P/N 105-291200
- One user key

### Setting the Address on the ZC2-4AB

Before installing the ZC2-4AB in the OMM, set the address on S1, DIP switches SW1-SW4. Refer to the CSG-M configuration printout for the address of the module. Use the *ZC2-4AB S1 Settings* table to set the address for this switch.

### ZC2-4AB Fuses

The ZC2-4AB comes with 70V fuses, P/N 105-291202, installed at the factory.

ZC2-4AB S1 SETTINGS

| Address | 4 3 2 1 | Address | 4 3 2 1 |
|---|---|---|---|
| ILLEGAL | O O O O | 008 | X O O O |
| 001 | O O O X | 009 | X O O X |
| 002 | O O X O | 010 | X O X O |
| 003 | O O X X | 011 | X O X X |
| 004 | O X O O | ILLEGAL | X X O O |
| 005 | O X O X | ILLEGAL | X X O X |
| 006 | O X X O | ILLEGAL | X X X O |
| 007 | O X X X | ILLEGAL | X X X X |

X=Closed or ON O=Open or OFF



Technical Manuals Online! - http://www.tech-man.com

**For 25.2V Installations,** remove the 70V fuses, F1-F4, and install the 25V fuses, P/N 105-291200, found in the installation kit.

Place the user key from the installation kit in the OMM-1 card edge connector for the ZC2-4AB (between positions 13-14 and 15-16).

After the address is set, install the ZC2-4AB in the OMM, being sure that the module is riding in the card guides and is firmly seated in the card edge connector.

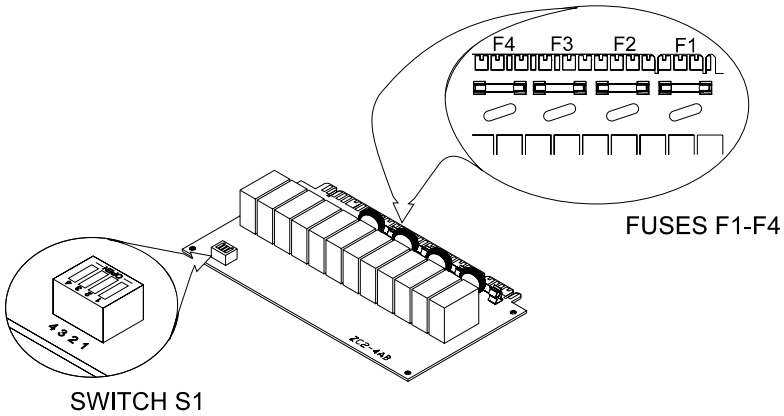


**Switch S1 and Fuses F1-F4 on the ZC2-4AB**

## Installing the ZC3-4AB

The ZC3-4AB plugs into a half-width slot on the OMM and comes with an installation kit that consists of the following:

- Four end of line resistors, P/N 140-820405
- One 2A, 250V fuse, P/N 105-292199
- Four 25V fuses, P/N 105-291200
- One user key

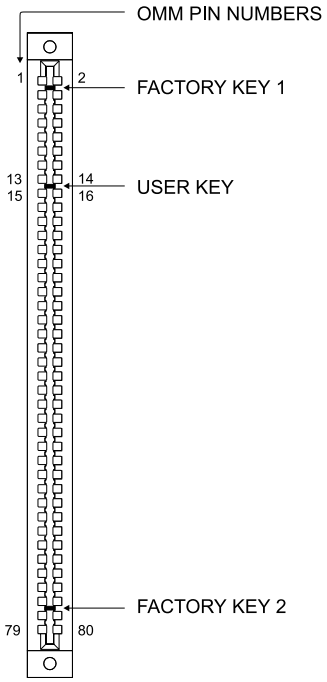


**Location of the User Key for the ZC2-4AB**

### Setting the Address on the ZC3-4AB

Before installing the ZC3-4AB in the OMM, set the address on S1, DIP switches SW1-SW4. Refer to the CSG-M configuration printout for the address of the module. Use the *ZC3-4AB S1 Settings* table to set the address for this switch.

**ZC3-4AB S1 SETTINGS**

| Address | 4 3 2 1 | Address | 4 3 2 1 |
|---|---|---|---|
| ILLEGAL | O O O O | 008 | X O O O |
| 001 | O O O X | 009 | X O O X |
| 002 | O O X O | 010 | X O X O |
| 003 | O O X X | 011 | X O X X |
| 004 | O X O O | ILLEGAL | X X O O |
| 005 | O X O X | ILLEGAL | X X O X |
| 006 | O X X O | ILLEGAL | X X X O |
| 007 | O X X X | ILLEGAL | X X X X |

X=Closed or ON O=Open or OFF



Technical Manuals Online! - http://www.tech-man.com

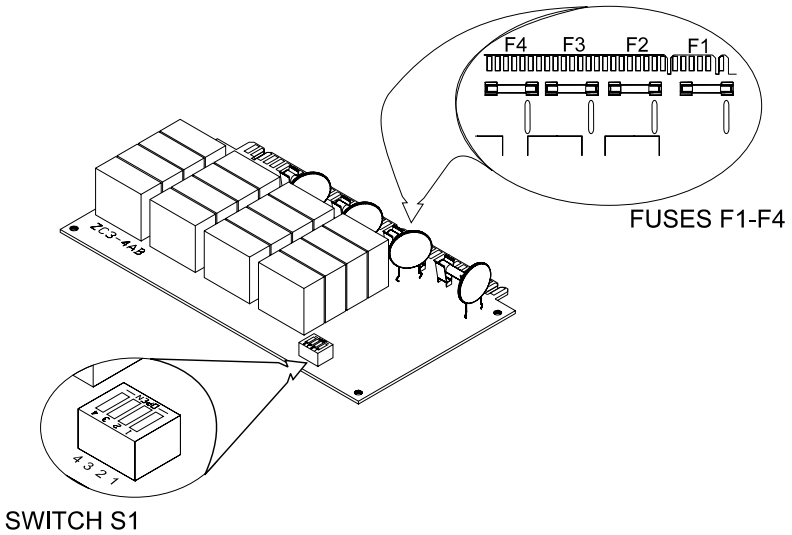


**Switch S1 and Fuses F1-F4 on the ZC3-4AB**

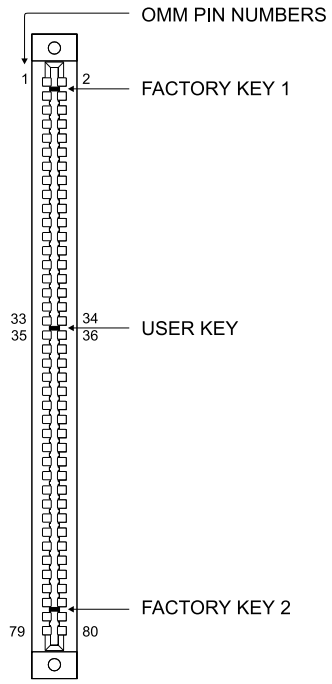


**Location of the User Key for the ZC3-4AB**

### ZC3-4AB Fuses

The ZC3-4AB comes with 70V fuses, P/N 105-291202, installed at the factory.

**For 25.2V Installations,** remove the 70V fuses, F1-F4 and install the 25V fuses, P/N 105-291200, found in the installation kit.

Place the user key from the installation kit in the OMM-1 card edge connector for the ZC3-4AB (between positions 33-34 and 35-36).

After the address is set, install the ZC3-4AB in the OMM, being sure that the module is riding in the card guides and is firmly seated in the card edge connector.

## Installing the ZCT-8B

The ZCT-8B plugs into a half-width slot on the OMM and comes with an installation kit that consists of the following:

- Eight end of line resistors, P/N 140-383467
- One user key

### Setting the Address on the ZCT-8B

Before installing the ZCT-8B in the OMM, set the addresses on S1, DIP switches SW1-SW4. Refer to the CSG-M configuration printout for the address of the module. Use the *ZCT-8B S1 Settings* table to set the address for this switch.



Technical Manuals Online! - http://www.tech-man.com

**ZCT-8B S1 SETTINGS**

| Address | 4 3 2 1 | Address | 4 3 2 1 |
|---|---|---|---|
| ILLEGAL | O O O O | 008 | X O O O |
| 001 | O O O X | 009 | X O O X |
| 002 | O O X O | 010 | X O X O |
| 003 | O O X X | 011 | X O X X |
| 004 | O X O O | ILLEGAL | X X O O |
| 005 | O X O X | ILLEGAL | X X O X |
| 006 | O X X O | ILLEGAL | X X X O |
| 007 | O X X X | ILLEGAL | X X X X |

X=Closed or ON O=Open or OFF

Place the user key from the installation kit in the OMM-1 card edge connector for the ZC1-8B (between positions 17-18 and 19-20).

After the address is set, install the ZCT-8B in the OMM, being sure that the module is riding in the card guides and is firmly seated in the card edge connector.

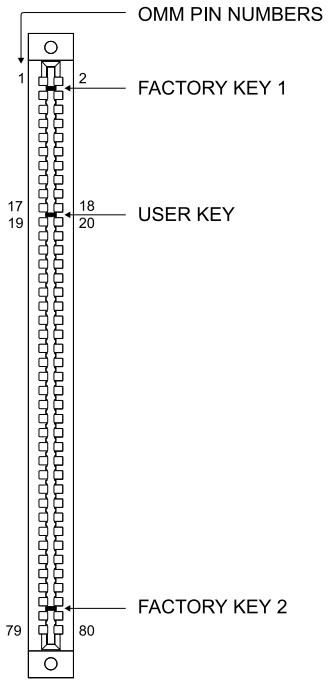


**Location of the User Key for the ZCT-8B**

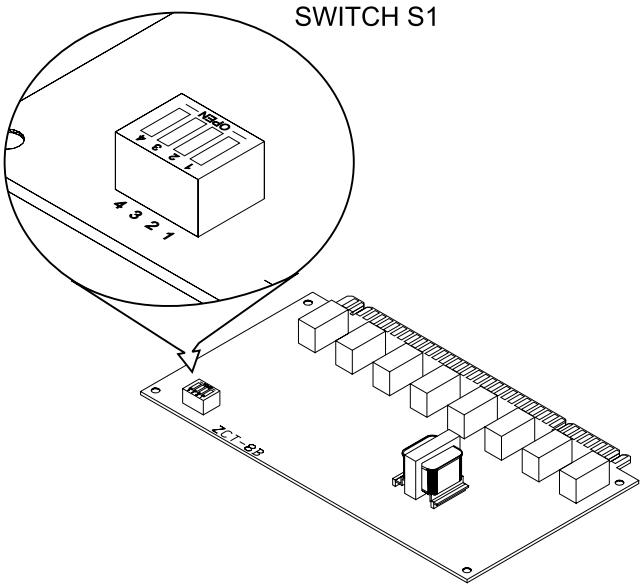


**Switch S1 on the ZCT-8B**

## Installing the ZAC-30

The ZAC-30 plugs into a half-width slot on the OMM and comes with an installation kit that consists of the following:

- One end of line resistor, P/N 140-820405
- One user key

### ZAC-30 Placement Requirements

**Up to five primary** ZAC-30s can be installed in one MME-3 enclosure.

**Up to two** primary ZAC-30s can be placed in a single OMM-1.

**When the ZAC-30 is installed, the door of the enclosure MUST have louvered plates (MDG-1) for ventilation.** Plexiglass plates may not be used in the door.



Technical Manuals Online! - http://www.tech-man.com

**OMM-1 Placement Requirements for the ZAC-30**

- Two primary ZAC-30s **must be diagonally placed** in one OMM-1. They cannot be mounted next to each other.

**Example:** Primary ZAC-30s can be placed at P7 and P6 OR P5 and P8.

- The horizontal OMM-1 slot next to a primary ZAC-30 can be used for the following:

**1. ZC series cards placement**

**Example:** If P7 and P6 have primary ZAC-30s, then P5 and P8 may have ZC cards installed in them.

**2. Dedicated one to one ZAC-30 backup for horizontally adjacent primary ZAC-30.**

**Example:** If P7 and P6 have primary ZAC-30s, then P5 may have a ZAC-30 only if it is a one to one backup of P7. P8 may have a ZAC-30 only if it is a one to one backup of P6.

- When there is only one ZAC-30 primary amplifier on an OMM-1 at location P7:
  1. P5 may have a ZC card or a one to one backup ZAC-30 for P7.
  2. P8 and P6 have no restriction and can have OCC-1s, ZCs, or **one** backup for multiple ZAC-30s.

- The horizontal OMM-1 slot next to a primary ZAC-30 **may not be used** as a backup to multiple ZAC-30s.

**Example:** If P7 has a primary ZAC-30, then P5 may not have a ZAC-30 that backs up multiple ZAC-30s.

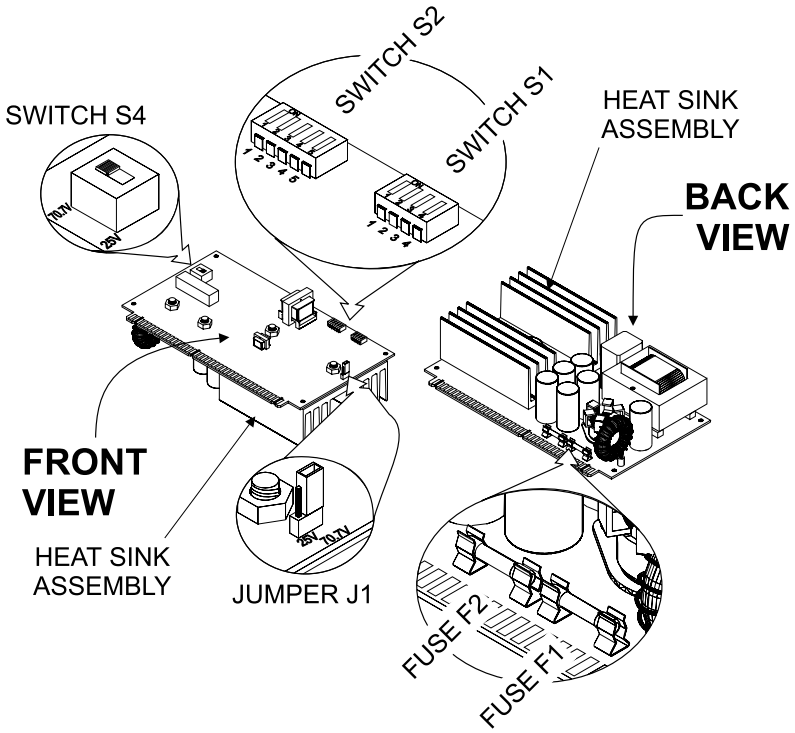


**Switches S1, S2 and S4, Fuses F1 and F2, and Jumper J1 on the ZAC-30**

**Setting the Address on the ZAC-30**

Before installing the ZAC-30 in the OMM, set the address on S1, DIP switches SW1-SW4. Refer to the CSG-M configuration printout for the address of the module. Use the *ZAC-30 S1 Settings* table to set the address for this switch.

**Configuring the ZAC-30**

The switches for configuring the card are located on the side of the card opposite the heatsink assembly. The fuses are located on the side of the card with the heatsink assembly.



Technical Manuals Online! - http://www.tech-man.com

ZAC-30 S1 SETTINGS

| Address | 4 3 2 1 | Address | 4 3 2 1 |
|---|---|---|---|
| ILLEGAL | O O O O | 008 | X O O O |
| 001 | O O O X | 009 | X O O X |
| 002 | O O X O | 010 | X O X O |
| 003 | O O X X | 011 | X O X X |
| 004 | O X O O | ILLEGAL | X X O O |
| 005 | O X O X | ILLEGAL | X X O X |
| 006 | O X X O | ILLEGAL | X X X O |
| 007 | O X X X | ILLEGAL | X X X X |

X=Closed or ON O=Open or OFF

**To configure the ZAC-30 for 25.2V RMS operation,** follow the silkscreen markings for 25V on the PC board and the steps below.

**On the Front Side of the Board:**

- Place Jumper J1 on the pins nearest the card edge connector (25V).
- Push the S4 slide switch toward the center of the PC card (25V setting).

**On the Back Side of the Board:**

- Replace F1 and F2 with the two 2.5A minifuses (P/N 105-291203) that are supplied.

**To configure the ZAC-30 for 70.7V RMS operation,** follow the silkscreen markings for 70V on the PC board and the steps below.

**On the Front Side of the Board:**

- Place Jumper J1 on the pins away from the card edge connector (70V).
- Push S4 toward the edge of the PC card (70V setting).

**On the Back Side of the Board:**

- Verify that F1 and F2 are 0.8A, P/N 105-292965.

**Configure the ZAC-30 for primary or backup operation.**

- If the ZAC-30 is a primary amplifier, set DIP switch SW5 of S2 to OPEN or OFF.
- If the ZAC-30 is a backup amplifier, set DIP switch SW5 of S2 to CLOSED or ON.
- DIP switches SW1–SW4 of S2 are not used.

**IMPORTANT: Primary and backup amplifier voltage settings MUST match.** The backup amplifier voltage settings on J1 and S4 ***must be the same*** as the settings on the primary amplifier(s) that it is backing up. **AN ERROR IN THE SETTING(S) MAY CAUSE IMPROPER FUNCTIONING OF THE SYSTEM.** Full testing must be done to ensure satisfactory operation.

**If one backup amplifier is shared by more than one ZAC-30,** connect terminal 3 of the OMM-1 terminal block for the primary ZAC-30 to terminal 3 of all other ZAC-30 cards that share the same backup amplifier.

**If the system has NO backup amplifier,** place a jumper across terminals 3 and 4.

Place the user key from the installation kit in the OMM-1 card edge connector for the ZAC-30 (between positions 45-46 and 47-48).

After the address is set, install the ZAC-30 in the OMM, being sure that the module is riding in the card guides and is firmly seated in the card edge connector.

**NOTE:** The heatsink on the board must face the 22 position terminal block where the wiring terminates.



Technical Manuals Online! - http://www.tech-man.com

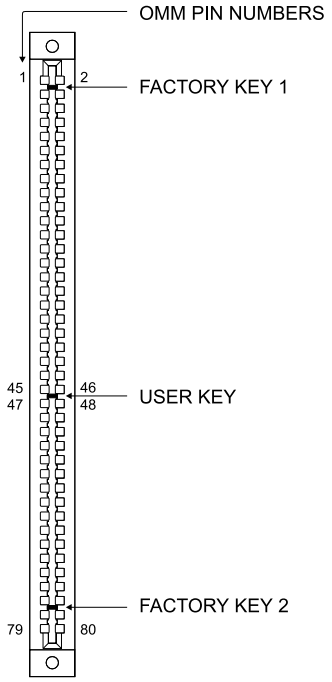


**Location of the User Key for the ZAC-30**

**NOTE:** The PL864-25S is not required for strobe circuits connected to either the CSM-4 or MMB-1/-2.

Determine which circuits will be used. Then, place the PL864 plug-on cards, one at a time, over the connectors on the PLC-4 card for the desired circuits.

- Locate P1 of each PL864 card near the edge connector of the PLC-4 card.
- Press down until the card seats properly. Apply pressure near the connectors—not in the middle of the card—or damage may result.
- For systems with 70.7V RMS audio circuits, take extra care when placing PL864-25S cards for strobe circuits. **A mix-up could damage system components.**

## Installing the PLC-4

The PLC-4 plugs into a half-width slot on the OMM and comes with an installation kit that consists of the following:

- One user key

### Installing the PL864 Cards onto the PLC-4

Determine which PL864 cards are to be used. Typically, the audio portion of a voice-equipped fire alarm control panel is either 25V RMS or 70.7V RMS.

- Use the PL864-25A for 25V RMS systems
- Use the PL864-70A for 70.7V RMS systems
- Use the PL864-25S for strobe circuits in any voice system.

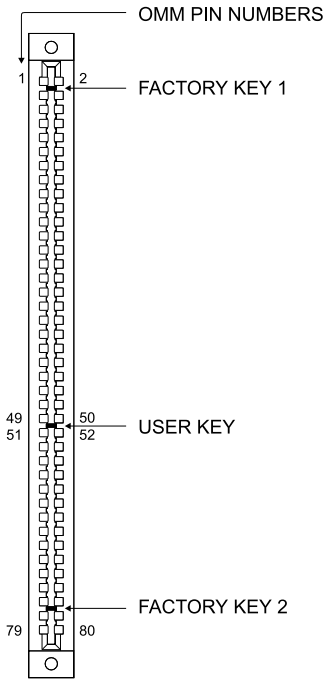


**Location of the User Key for the PLC-4**



Technical Manuals Online! - http://www.tech-man.com

**Placing the PLC-4 Card in the OMM Slot**
Place the user key from the installation kit in the OMM-1 card edge connector for the PLC-4 (between positions 49-50 and 51-52).

After the PL864 cards are plugged onto the board, install the PLC-4 in the OMM. Be sure that the module is riding in the card guides and is firmly seated in the card edge connector.

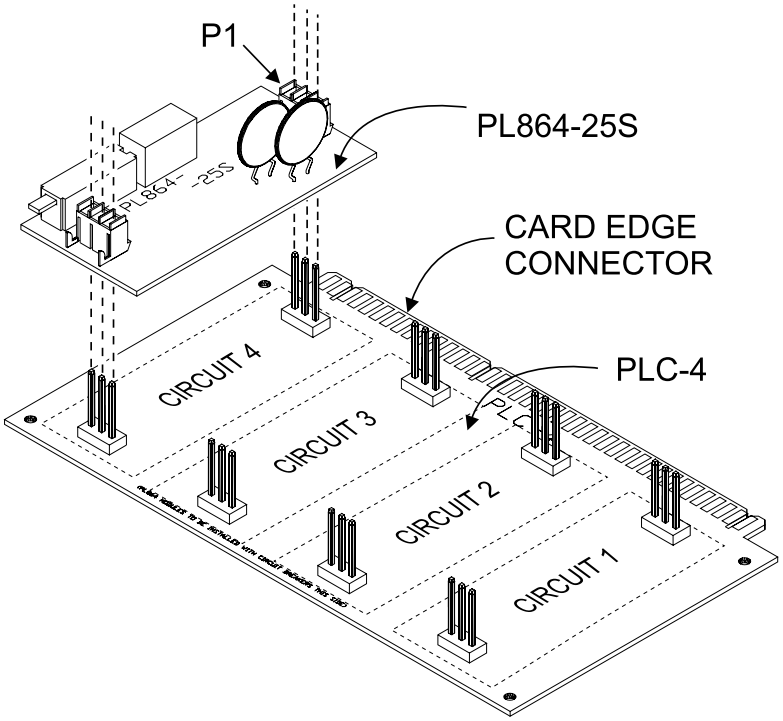


**Installing PL864 Cards onto the PLC-4**

## Installing the RCM-1

The RCM-1 plugs into a full-width slot on the OMM.

**Setting the Address on the RCM-1**
Before installing the RCM-1 in the OMM, set the address on S1, DIP switches SW1-SW8. Refer to the CSG-M configuration printout for the address of the module. Use the Network Address Programming Table at the end of this chapter to set the address for this switch.

The RCM-1 has a second bank of DIP switches, S2, which must be correctly configured for the RCM-1 to operate properly. Use the tables in the ***RCM-1 Connections and Ratings*** section of Chapter 4 in this manual to set these switches for the connection style you are using.

The RCM-1 uses the two factory installed keys only—there is no additional user key.

After the addresses are set, install the RCM-1 in the OMM, being sure that the module is riding in the card guides and is firmly seated in the card edge connector.

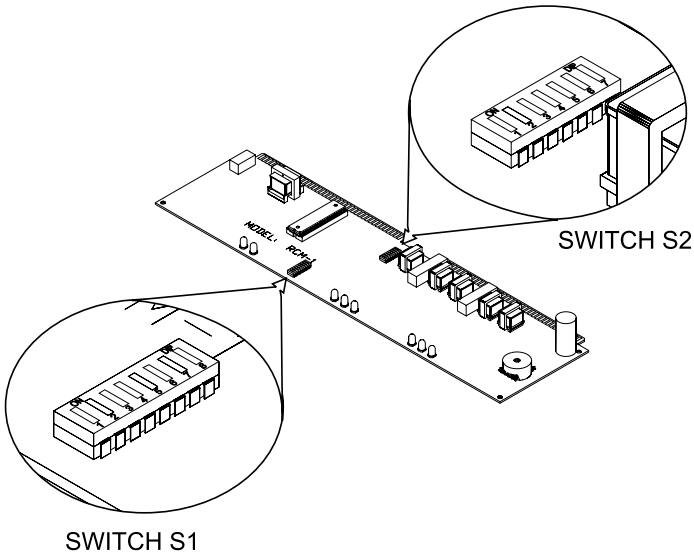


**Switches S1 and S2 on the RCM-1**



Technical Manuals Online! - http://www.tech-man.com

## NETWORK ADDRESS PROGRAMMING TABLE

| ADDR | 87654321 | ADDR | 87654321 | ADDR | 87654321 | ADDR | 87654321 |
|---|---|---|---|---|---|---|---|
| 000 | ILLEGAL | 064 | 0X000000 | 128 | X0000000 | 192 | XX000000 |
| 001 | ILLEGAL | 065 | 0X00000X | 129 | X000000X | 193 | XX00000X |
| 002 | ILLEGAL | 066 | 0X0000X0 | 130 | X00000X0 | 194 | XX0000X0 |
| 003 | 000000XX | 067 | 0X0000XX | 131 | X00000XX | 195 | XX0000XX |
| 004 | 00000X00 | 068 | 0X000X00 | 132 | X0000X00 | 196 | XX000X00 |
| 005 | 00000X0X | 069 | 0X000X0X | 133 | X0000X0X | 197 | XX000X0X |
| 006 | 00000XX0 | 070 | 0X000XX0 | 134 | X0000XX0 | 198 | XX000XX0 |
| 007 | 00000XXX | 071 | 0X000XXX | 135 | X0000XXX | 199 | XX000XXX |
| 008 | 0000X000 | 072 | 0X00X000 | 136 | X000X000 | 200 | XX00X000 |
| 009 | 0000X00X | 073 | 0X00X00X | 137 | X000X00X | 201 | XX00X00X |
| 010 | 0000X0X0 | 074 | 0X00X0X0 | 138 | X000X0X0 | 202 | XX00X0X0 |
| 011 | 0000X0XX | 075 | 0X00X0XX | 139 | X000X0XX | 203 | XX00X0XX |
| 012 | 0000XX00 | 076 | 0X00XX00 | 140 | X000XX00 | 204 | XX00XX00 |
| 013 | 0000XX0X | 077 | 0X00XX0X | 141 | X000XX0X | 205 | XX00XX0X |
| 014 | 0000XXX0 | 078 | 0X00XXX0 | 142 | X000XXX0 | 206 | XX00XXX0 |
| 015 | 0000XXXX | 079 | 0X00XXXX | 143 | X000XXXX | 207 | XX00XXXX |
| 016 | 000X0000 | 080 | 0X0X0000 | 144 | X00X0000 | 208 | XX0X0000 |
| 017 | 000X000X | 081 | 0X0X000X | 145 | X00X000X | 209 | XX0X000X |
| 018 | 000X00X0 | 082 | 0X0X00X0 | 146 | X00X00X0 | 210 | XX0X00X0 |
| 019 | 000X00XX | 083 | 0X0X00XX | 147 | X00X00XX | 211 | XX0X00XX |
| 020 | 000X0X00 | 084 | 0X0X0X00 | 148 | X00X0X00 | 212 | XX0X0X00 |
| 021 | 000X0X0X | 085 | 0X0X0X0X | 149 | X00X0X0X | 213 | XX0X0X0X |
| 022 | 000X0XX0 | 086 | 0X0X0XX0 | 150 | X00X0XX0 | 214 | XX0X0XX0 |
| 023 | 000X0XXX | 087 | 0X0X0XXX | 151 | X00X0XXX | 215 | XX0X0XXX |
| 024 | 000XX000 | 088 | 0X0XX000 | 152 | X00XX000 | 216 | XX0XX000 |
| 025 | 000XX00X | 089 | 0X0XX00X | 153 | X00XX00X | 217 | XX0XX00X |
| 026 | 000XX0X0 | 090 | 0X0XX0X0 | 154 | X00XX0X0 | 218 | XX0XX0X0 |
| 027 | 000XX0XX | 091 | 0X0XX0XX | 155 | X00XX0XX | 219 | XX0XX0XX |
| 028 | 000XXX00 | 092 | 0X0XXX00 | 156 | X00XXX00 | 220 | XX0XXX00 |
| 029 | 000XXX0X | 093 | 0X0XXX0X | 157 | X00XXX0X | 221 | XX0XXX0X |
| 030 | 000XXXX0 | 094 | 0X0XXXX0 | 158 | X00XXXX0 | 222 | XX0XXXX0 |
| 031 | 000XXXXX | 095 | 0X0XXXXX | 159 | X00XXXXX | 223 | XX0XXXXX |
| 032 | 00X00000 | 096 | 0XX00000 | 160 | X0X00000 | 224 | XXX00000 |
| 033 | 00X0000X | 097 | 0XX0000X | 161 | X0X0000X | 225 | XXX0000X |
| 034 | 00X000X0 | 098 | 0XX000X0 | 162 | X0X000X0 | 226 | XXX000X0 |
| 035 | 00X000XX | 099 | 0XX000XX | 163 | X0X000XX | 227 | XXX000XX |
| 036 | 00X00X00 | 100 | 0XX00X00 | 164 | X0X00X00 | 228 | XXX00X00 |
| 037 | 00X00X0X | 101 | 0XX00X0X | 165 | X0X00X0X | 229 | XXX00X0X |
| 038 | 00X00XX0 | 102 | 0XX00XX0 | 166 | X0X00XX0 | 230 | XXX00XX0 |
| 039 | 00X00XXX | 103 | 0XX00XXX | 167 | X0X00XXX | 231 | XXX00XXX |
| 040 | 00X0X000 | 104 | 0XX0X000 | 168 | X0X0X000 | 232 | XXX0X000 |
| 041 | 00X0X00X | 105 | 0XX0X00X | 169 | X0X0X00X | 233 | XXX0X00X |
| 042 | 00X0X0X0 | 106 | 0XX0X0X0 | 170 | X0X0X0X0 | 234 | XXX0X0X0 |
| 043 | 00X0X0XX | 107 | 0XX0X0XX | 171 | X0X0X0XX | 235 | XXX0X0XX |
| 044 | 00X0XX00 | 108 | 0XX0XX00 | 172 | X0X0XX00 | 236 | XXX0XX00 |
| 045 | 00X0XX0X | 109 | 0XX0XX0X | 173 | X0X0XX0X | 237 | XXX0XX0X |
| 046 | 00X0XXX0 | 110 | 0XX0XXX0 | 174 | X0X0XXX0 | 238 | XXX0XXX0 |
| 047 | 00X0XXXX | 111 | 0XX0XXXX | 175 | X0X0XXXX | 239 | XXX0XXXX |
| 048 | 00XX0000 | 112 | 0XXX0000 | 176 | X0XX0000 | 240 | XXXX0000 |
| 049 | 00XX000X | 113 | 0XXX000X | 177 | X0XX000X | 241 | XXXX000X |
| 050 | 00XX00X0 | 114 | 0XXX00X0 | 178 | X0XX00X0 | 242 | XXXX00X0 |
| 051 | 00XX00XX | 115 | 0XXX00XX | 179 | X0XX00XX | 243 | XXXX00XX |
| 052 | 00XX0X00 | 116 | 0XXX0X00 | 180 | X0XX0X00 | 244 | XXXX0X00 |
| 053 | 00XX0X0X | 117 | 0XXX0X0X | 181 | X0XX0X0X | 245 | XXXX0X0X |
| 054 | 00XX0XX0 | 118 | 0XXX0XX0 | 182 | X0XX0XX0 | 246 | XXXX0XX0 |
| 055 | 00XX0XXX | 119 | 0XXX0XXX | 183 | X0XX0XXX | 247 | XXXX0XXX |
| 056 | 00XXX000 | 120 | 0XXXX000 | 184 | X0XXX000 | 248 | ILLEGAL |
| 057 | 00XXX00X | 121 | 0XXXX00X | 185 | X0XXX00X | 249 | ILLEGAL |
| 058 | 00XXX0X0 | 122 | 0XXXX0X0 | 186 | X0XXX0X0 | 250 | ILLEGAL |
| 059 | 00XXX0XX | 123 | 0XXXX0XX | 187 | X0XXX0XX | 251 | ILLEGAL |
| 060 | 00XXXX00 | 124 | 0XXXXX00 | 188 | X0XXXX00 | 252 | ILLEGAL |
| 061 | 00XXXX0X | 125 | 0XXXXX0X | 189 | X0XXXX0X | 253 | ILLEGAL |
| 062 | 00XXXXX0 | 126 | 0XXXXXX0 | 190 | X0XXXXX0 | 254 | ILLEGAL |
| 063 | 00XXXXXX | 127 | 0XXXXXXX | 191 | X0XXXXXX | 255 | ILLEGAL |

O = OPEN (or OFF)  X = CLOSED (or ON)



Technical Manuals Online! - http://www.tech-man.com

# Operation

## Using The MKB* Keyboard/Annunciator Panel in Local Mode

When the MKB Keyboard/Annunciator Panel is installed, only the display, LEDs, and display control keys are visible. The **ACK**nowledge keys and other controls are hidden behind a locked door. Unlock and open the door to gain access to those keys and controls.

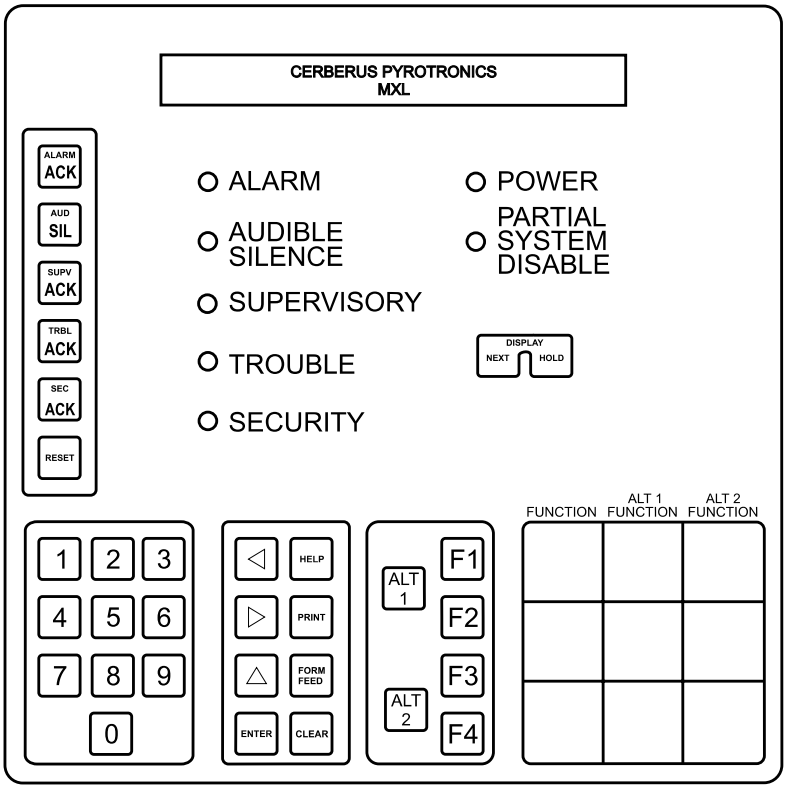


### The Display

The display has two lines of 40 characters each. What is shown on the display depends on the state of the System. The display contains a back light which turns on automatically when any key is depressed or an event is reported. The back light turns off automatically after 5 minutes of system inactivity.

The System has several displays. When the System is Normal, it displays:

```
[time/date]                                        SYSTEM
[system message]                                   NORMAL
```

When a trouble event has been annunciated for example, the System alternates between the following three displays:

```
[address][custom message]          [ACK STATUS or BLANK]
[event number][device type]or[trouble type]    [IN/OUT]
```

```
[address][type of device in trouble]     [ACK STATUS or BLANK]
[event number] [time/date]         [IN or OUT]
```

```
ALARMS=nnn                         SUPERVISORY=nnn
TROUBLES=nnn                       SECURITY=nnn
```

* In this chapter, MKB refers to all of the following MKB models: MKB-1, MKB-2, MKB-3, and MKB-4.



Technical Manuals Online! - http://www.tech-man.com

In these displays, **ACK** appears if the event has been acknowledged; otherwise, the field is blank. **IN** is displayed when a condition occurs; **OUT** is displayed when a normal state is restored. **[time/date]** shows the time and date the event occurred.

## Display Keys

The MXL has two display keys, **NEXT** and **HOLD,** located on the MKB.

Press **NEXT** to show the previous item in a list of alarms, supervisories, troubles, or security conditions. The System will alternate between the three displays shown on the previous page.

Press **HOLD** at any time to freeze the present display. The display will remain frozen until you release **HOLD.**

## System Control Keypads and LEDs

The System Control Keypad is described in the table below:

**SYSTEM CONTROL KEYPAD**

| Key | Purpose |
|---|---|
| ALARM ACK | To acknowledge a fire alarm |
| AUD SIL | To silence or unsilence a notification appliance circuit |
| SUPV ACK | To acknowledge a supervisory |
| TRBL ACK | To acknowledge a trouble |
| SEC ACK | To acknowledge a security condition |
| RESET | To reset the System |

When lit, the LEDs (light-emitting diodes) indicate various conditions as follows:

**SYSTEM CONTROL LEDs**

| LED | Indicates |
|---|---|
| ALARM | Flashes when there is a least one unacknowledged fire alarm; glows steadily when all fire alarms are acknowledged. |
| AUDIBLES SILENCED | Flashes when at least one notification appliance circuit (NAC) is active; glows steadily when all silenceable NACs are silenced. |
| SUPERVISORY | Flashes when there is at least one unacknowledged supervisory; glows steadily when all supervisories are acknowledged. |
| TROUBLE | Flashes when there is at least one unacknowledged trouble; glows steadily when all troubles are acknowleged. |
| SECURITY | Flashes when there is at least one unacknowledged security condition; glows steadily when all security conditions are acknowledged. |
| POWER | Indicates the power is on.<br>Steady glow = AC power.<br>Flashing On = battery backup. |
| PARTIAL SYSTEM DISABLE | At least one device is disabled. |

## Addresses

All modules and devices annunciated on the MXL are identified by an address (MMM-DDD). Each address is in two parts: a module address (MMM) and a device address (DDD). The number identifying the module may be as high as 253, and the number identifying the device may be as high as 254. Always enter all leading zeros for module and



Technical Manuals Online! - http://www.tech-man.com

device addresses. For events specific to a module, the device is not required.

**Fixed Addresses**

A module may be assigned to any address on the System, except for some fixed addresses that have already been assigned. (See the *Fixed Module Addresses* Table.) The modules communicate to the MXL Control Panel through a serial communications network called MNET. The System continuously supervises all of the modules for presence and proper operation.

You may assign a module to any address on the System, and assign addresses in any order, mixing different types of modules and leaving gaps in the numbering, provided you do not use the fixed addresses.

FIXED MODULE ADDRESSES

| Module Address | Module | Device Address (Range) |
|---|---|---|
| 0 | Do Not Use | |
| 1 | Analog loop 1 (MMB-1/-2) | 001-060 |
| 2 | Analog loop 2 (MMB-1/-2) | 001-060 |
| 3 | | |
| ⇩ | | |
| 248 | MKB-2 | |
| 249 | MKB-2 | |
| 250 | MKB-2 | |
| 251 | MKB-2, No.1 | |
| 252 | Reserved | |
| 253 | MMB-1/-2 | 001 to 250 |
| 254 | Programmer CSG-M | |
| 255 | Global (reserved) | |

The following modules occupy an address on the System, but have no devices (and no device addresses).

- MKB
- RCC-1/1F
- CMI-300
- NET-7
- NIM-1R
- RCM-1

## Numeric Keypad

Use the numeric keypad (keys 0 through 9) when the System asks for a module number, device number, password, time, date, or other information. The display shows each number as you press the key (except when you enter a password the System shows an asterisk for each digit that you type).

## Command Keypad

The command keys are described in the following table:

COMMAND KEYPAD

| Key | Purpose |
|---|---|
| ⮜ | Select the item to the left of what is flashing on the display (unless entering a number). |
| ⮞ | Select the item to the right of what is flashing on the display (unless entering a number). |
| ⮝ | Go back to the previous item. |
| **ENTER** | Press to select the item on which the cursor is flashing. After typing in numbers, press ENTER to complete the entry. |
| **HELP** | Press to display a one-line message. |
| **PRINT** | Press to begin printing various lists and reports. |
| **FORM FEED** | Press to advance the paper in the printer. |
| **CLEAR** | Press to cancel printouts begun by pressing PRINT. The System will print: This listing prematurely terminated. |



Technical Manuals Online! - http://www.tech-man.com

### The Special (ALT and Function) Keypad

Using the four function keys alone or in combination with **ALT1** or **ALT2** provides a total of 12 special functions. When using a combination, hold the **ALT** key down and then press the function key.

| | | |
|---|---|---|
| **FI** | **ALT1+FI** | **ALT2+FI** |
| **F2** | **ALT1+F2** | **ALT2+F2** |
| **F3** | **ALT1+F3** | **ALT2+F3** |
| **F4** | **ALT1+F4** | **ALT2+F4** |

These keys are defined using the CSG-M Custom Software Generator (See the ***CSG-M Programming Manual***, P/N 315-090381).

### Internal Audible Alarm

The internal audible alarm sounds steadily when there is an unacknowledged alarm. It pulses if all alarms are acknowledged but there is at least one supervisory, trouble, or security condition.

### The Printer and PRINT and CLEAR Keys

If your System includes the printer option, the printer automatically prints System events. On the TSP-40 printer, those events are printed 40 characters across.

In addition to the automatic recording of events, you can print various lists and reports using the **PRINT** key. On the TSP-40 printer, those items are printed in condensed form 80 characters across.

You can cancel the printing at any time by pressing **CLEAR;** the System will print the following:

```
This listing prematurely terminated.
```

### Modes Of Operation

The MXL alphanumeric display annunciator has five modes of operation:

1. Alarm
2. Supervisory
3. Trouble
4. Security
5. Normal

This order ensures that alarms always take priority over all other conditions. In turn, supervisories always take priority over troubles and troubles always take priority over security conditions. All of the above modes take priority over Normal mode, which is the absence of any alarms, supervisories, troubles, or security conditions.

## Normal Mode

Normal mode is the absence of any alarms, supervisories, troubles, or security conditions.

The display shows the following:

```
11:59:59 DEC 31, 20xx    SYSTEM
[custom system message]   NORMAL
```

The **POWER** LED glows steadily in Normal mode when the System has AC power. The **ALARM, AUDIBLE SILENCE, SUPERVISORY, TROUBLE, SECURITY,** and **PARTIAL SYSTEM DISABLE** LEDs are off and the internal audible is off.

If your System has the printer option, the System prints a message in the following format every day at midnight,



Technical Manuals Online! - http://www.tech-man.com

even when there are alarms or other conditions:

```
System Status at 00:00:00 Jul 02, 20xx
0   ALARM              0   ALARM ACK
0   SUPERV             0   SUPERV ACK
0   TROUBLE            0   TROUBLE ACK
0   SECURITY           0   SECURITY ACK
```

# Alarm

## Responding to an Alarm

Follow the response plan approved by the local authority having jurisdiction.

When the MXL is installed, the **ACK**nowledge key and audible Alarm Silencing key **(AUD SIL)** on the MKB are behind a locked door. The display, LEDs, and display control keys are visible and accessible. To acknowledge an alarm or trouble, or to silence an audible alarm, first unlock and open the door.

## How the System Annunciates Alarms

When a fire is detected, the System causes the **ALARM** LED on the MKB to flash, the System's internal audible to sound, the **AUDIBLE SILENCE** LED to flash, and the alphanumeric display on the MKB to alternate in a sequence among the three messages shown in the following example. (This example assumes that two alarms were received.)

Message 1:

```
1-001 [custom message]
002 [device type]        IN ALR
```

Message 2:

```
1-001 [custom message]
002 [time/date]          IN ALR
```

Message 3:

```
ALARMS=002       SUPERVISORY=000
TROUBLES=000        SECURITY=000
```

In addition, the System responds to alarms with programmed output functions such as other audible signals.

In the previous messages, **1-001** represents the address of the device reporting the alarm. **On the display, not all leading zeros are shown. If your System includes a printer, note that the leading zeros are not shown.**

**002** in the first message tells you that this is the second (and the most recent) of two alarms received.

The status information in the third message reports the total of alarms, supervisories, troubles, and security conditions.

If your System includes a printer, it prints a message from two to four lines long similar to the following:

```
ALARM   1-1   11:59:59  Dec 31, 20xx
#1 [custom message], [device type]
```

In the above printed message, **ALARM** indicates that the type of occurrence is an alarm; **1-1** is the device address; **#1** is the number of the alarm in the list of alarms; **[custom message]** is a custom message entered using the CSG-M Custom Software Generator (See the *CSG-M Programming Manual*, P/N 315-090381); **[device type]** is the type of device which reported the alarm.



Technical Manuals Online! - http://www.tech-man.com

### Viewing the List of Alarms

To see the alarm list when there is more than one alarm, press **NEXT** on the MKB (the System displays the most recent alarm first).

### How to Individually Acknowledge an Alarm (NFPA 72 Proprietary, UL 1076)

- Press **ALARM ACK.** The System acknowledges the alarm displayed and then displays the next unacknowledged alarm. If your System has the printer option, it prints an alarm acknowledgment message similar to the following:

```
ACK Alarm   1-5  12:01:28 Dec 31,20xx
#2 [custom message], [device type]
```

  Note that the acknowledgment message includes the term **ACK** to indicate this alarm was acknowledged.

- Continue acknowledging alarms as explained above until the System displays the following message:

```
ALL ALARMS ACKNOWLEDGED
```

  The **ALARM** LED glows steadily to indicate that all alarms are acknowledged. If there are no supervisories, troubles, or security conditions still in the System, the internal audible goes silent; if any of those conditions still exist, the internal audible pulses.

- If your System includes a printer, it prints a message similar to the following:

```
ACK Alarm       12:05:44 Dec 31,20xx
All Alarms Are Now Acknowledged.
```

### How to Block Acknowledge an Alarm (NFPA 72 Local, 72 Municipal Tie, 72 Remote Station)

- Note the specific location of the alarm(s) by using the procedures described above.
- Unlock and open the door.
- Press **ALARM ACK** to acknowledge **all** alarms. The System displays the following message:

```
ALL ALARMS ACKNOWLEDGED
```

- If your System includes the printer option, it prints the following message:

```
ACK Alarm       11:59:59 Dec 31,20xx
All Alarms Are Now Acknowledged.
```

- If you press **ALARM ACK** again, the System displays:

```
ALL ALARMS ACKNOWLEDGED
```

The **ALARM** LED glows steadily to indicate that all alarms are acknowledged. If there are no supervisories, troubles, or security conditions in the System, the internal audible goes silent; if any of those conditions still exist, the internal audible pulses.

### Silencing the System

Press **AUD SIL** after all alarms are acknowledged. The System displays the following message:

```
AUDIBLES SILENCED
```

(Pressing **AUD SIL** a second time causes the internal audible and the System to unsilence and the message **AUDIBLES UNSILENCED** to appear on the display; thus, pressing **AUD SIL**



Technical Manuals Online! - http://www.tech-man.com

alternately silences and unsilences the System.)

If your System has a printer, it prints a message similar to the following:

```
AUD. SILENCED/UNSIL. 11:01:00 Dec 31, 20xx
Audibles Silenced
```

# Supervisory

## How the System Annunciates Supervisories

When a supervisory is detected, the System causes the **SUPERVISORY** LED on the MKB to flash, the System's internal audible to sound, and the alphanumeric display on the MKB to alternate in a sequence among the three messages shown in the following example. (The example assumes that two supervisories were received.)

Message 1:

```
1-001 [custom message]
002 [device type]        IN SUP
```

Message 2:

```
1-001 [custom message]
002 [time/date]          IN SUP
```

Message 3:

```
ALARMS=000      SUPERVISORY=002
TROUBLES=000       SECURITY=000
```

In addition, the System responds to supervisories with programmed output functions.

In the messages above, **1-001** represents the address of the device reporting the supervisory.

**002** in the first message tells you that this is the second (and the most recent) of two supervisories received.

The status information in the third message reports the total of alarms, supervisories, troubles, and security conditions.

If your System includes a printer, it prints a message from two to four lines long similar to the following:

```
SUPERV    1-1  11:59:59 Dec 31, 20xx
#1 [custom message], [device type]
```

In the above printed message, **SUPERV** indicates that the type of occurrence is a supervisory; **1-1** is the device address; **#1** is the number of the supervisory in the list of supervisories; **[custom message]** is a custom message entered using the CSG-M Custom Software Generator (See the *CSG-M Programming Manual*, P/N 315- 090381); **[device type]** is the type of device which reported the supervisory.

## Viewing the List of Supervisories

To see the supervisory list when there is more than one supervisory, press **NEXT** on the MKB (the System displays the most recent supervisory first).



Technical Manuals Online! - http://www.tech-man.com

### How to Individually Acknowledge a Supervisory (NFPA 72 Proprietary, UL 1076)

- Press **SUPV ACK.** The System acknowledges the supervisory displayed and then displays the next unacknowledged supervisory. If your system has a printer, it prints an acknowledgment message similar to the following:

```
ACK Supervisory  1-5 12:01:28 Dec 31,20xx
#2 [custom message], [device type]
```

  Note that the acknowledgment message includes the term ACK to indicate this supervisory was acknowledged.

- Continue acknowledging supervisories as explained above until the System displays the following message:

```
ALL SUPERVISORIES ACKNOWLEDGED
```

  The **SUPERVISORY** LED glows steadily to indicate that all supervisories are acknowledged. If there are no troubles or security conditions still in the System, the internal audible goes silent; if any of those conditions still exist, the internal audible pulses.

- If your System includes a printer, it prints the following message:

```
ACK Supervisory 12:05:44 Dec 31,20XX
All Supervisories Are Now Acknowledged.
```

### How to Block Acknowledge a Supervisory (NFPA 72 Local, 72 Municipal Tie, 72 Remote Station)

- Note the specific location of the supervisories by using the procedures described above.
- Unlock and open the door.
- Press **SUPV ACK** to acknowledge **all** supervisories. The System displays the following message:

```
ALL SUPERVISORIES ACKNOWLEDGED
```

- If your System includes a printer, it prints the following message:

```
ACK Supervisory   11:59:59 Dec 31,20xx
All Supervisories Are Now Acknowledged.
```

- If you press **SUPV ACK** again, the System displays:

```
ALL SUPERVISORIES ACKNOWLEDGED
```

The **SUPERVISORY** LED glows steadily to indicate that all supervisories are acknowledged. If there are no troubles or security conditions in the System, the internal audible goes silent; if any of those conditions still exist, the internal audible pulses.

## Trouble

### How the System Annunciates Troubles

When a trouble is detected, the System causes the **TROUBLE** LED on the MKB to flash, the System's internal audible to sound, and the alphanumeric display on the MKB to alternate in a sequence among the three messages shown below. This example assumes that two troubles were received:

Message 1:

```
1-001 [custom message]
002 [trouble type]       IN TBL
```



Technical Manuals Online! - http://www.tech-man.com

Message 2:

```
1-001 [device type]
002 [time/date]          IN TBL
```

Message 3:

```
ALARMS=000       SUPERVISORY=000
TROUBLES=002        SECURITY=000
```

In addition, the System responds to troubles with programmed output functions.

In the messages above, **1-001** represents the address of the device reporting the trouble.

**002** in the first message tells you that this is the second (and the most recent) of two troubles received.

The status information in the third message reports the total of alarms, supervisories, troubles, and security conditions.

If your System includes a printer, it prints a message from two to four lines long similar to the following:

```
TROUBLE IN   1-1  11:59:59 Dec 31, 20xx
#1 [custom message], [trouble type],
[device type]
```

In the above printed message, **TROUBLE** indicates that the type of occurrence is a trouble; **1-1** is the device address; and **#1** is the number of troubles in the list of troubles; **[custom message]** is a custom message entered using the CSG-M Custom Software Generator (See the *CSG-M Programming Manual*, P/N 315-090381); **[trouble type]** is the type of trouble which reported; **[device type]** is the type of device in trouble.

## Viewing the List of Troubles

To see the trouble list when there is more than one trouble, press **NEXT** on the MKB (the System displays the most recent trouble first).

## How to Individually Acknowledge a Trouble (NFPA 72 Proprietary, UL 1076)

- Press **TRBL ACK.** The System acknowledges the trouble displayed and then displays the next unacknowledged trouble. If your System has a printer, it prints an acknowledgment message similar to the following:

```
ACK Trouble   1-5  12:01:28 Dec 31,20xx
#2 [custom message],[trouble type],
[device type]
```

  Note that the acknowledgment message includes the term **ACK** to indicate this trouble was acknowledged.

- Continue acknowledging troubles as explained above until the System displays the following message:

```
ALL TROUBLES ACKNOWLEDGED
```

  The **TROUBLE** LED glows steadily to indicate that all troubles are acknowledged. If there are no security conditions still in the System, the internal audible goes silent; if any of those conditions still exist, the internal audible pulses.

- If your System includes a printer, it prints the following message:

```
ACK Trouble     12:05:44 Dec 31, 20xx
All Troubles Are Now Acknowledged.
```



Technical Manuals Online! - http://www.tech-man.com

### How to Block Acknowledge a Trouble (NFPA 72 Local, 72 Municipal Tie, 72 Remote Station)

- Note the specific location of the trouble(s) by using the procedures described above.
- Unlock and open the door.
- Press **TRBL ACK** to acknowledge **all** troubles. The System displays the following message:

```
ALL TROUBLES ACKNOWLEDGED
```

- If your System includes a printer, it prints the following message:

```
ACK Trouble     11:59:59 Dec 31, 20xx
All Troubles Are Now Acknowledged.
```

- If you press **TRBL ACK** again, the System displays:

```
ALL TROUBLES ACKNOWLEDGED
```

The **TROUBLE** LED glows steadily to indicate that all troubles are acknowledged. If there are no security conditions in the System, the internal audible goes silent; if any security conditions still exist, the internal audible pulses.

## Security

### How the System Annunciates Security Conditions

When a security condition is detected, the System causes the **SECURITY** LED on the MKB to flash, the System's internal audible to sound, and the alphanumeric display on the MKB to alternate in a sequence among the three messages shown below. This example assumes that two security conditions were received:

Message 1

```
1-001 [custom message]
002 [device type]        IN SEC
```

Message 2

```
1-001 [custom message]
002 [time/date]          IN SEC
```

Message 3

```
ALARMS=000      SUPERVISORY=000
TROUBLES=000       SECURITY=002
```

In addition, the System responds to security conditions with programmed output functions.

In the messages above, **1-001** represents the address of the device reporting the security condition.

**002** in the first message tells you that this is the second (and the most recent) of two security conditions received.

The status information in the third message reports the total number of alarms, supervisories, troubles, and security conditions.

If your System includes a printer, it prints a message from two to four lines long similar to the following:

```
SECURITY IN   1-1 11:59:59 DEC 31, 20xx
#1 [custom message], [device type]
```

In the above printed message, **SECURITY** indicates that the type of occurrence is a security condition; **1-1** is the device address; **#1** is the number of the security condition in



Technical Manuals Online! - http://www.tech-man.com

the list of security conditions; **[custom message]** is a custom message entered using the CSG-M Custom Software Generator (See the *CSG-M Programming Manual*, P/N 315-090381); **[device type]** is the type of device which reported the security condition.

### Viewing the List of Security Conditions

To see the security condition list when there is more than one security condition, press **NEXT** on the MKB (the System displays the most recent security condition first).

### How to Individually Acknowledge a Security Condition (UL 1076)

- Press **SEC ACK.** The System acknowledges the security condition displayed and then displays the next unacknowledged security condition. If your System has a printer, it prints an acknowledgment message similar to the following:

```
ACK Security  1-5 12:01:28 Dec 31,20xx
#2 [custom message], [device type]
```

  Note that the acknowledgment message includes the term **ACK** to indicate this security condition was acknowledged.

- Continue acknowledging security conditions as explained above until the System displays the following message:

```
ALL SECURITY CONDITIONS
ACKNOWLEDGED
```

  The SECURITY LED glows steadily to indicate that all security conditions are acknowledged, and the internal audible goes silent.

- If your System includes a printer, it prints the following message:

```
ACK Security    12:05:44 DEC 31, 20xx
All Security Conditions Are Now Acknowledged.
```

## Reset Procedures

### Hard Reset

Other terms for Hard Reset are **Power-up, Initialization,** and **Cold Reset.**

Applying power to the System performs a Hard Reset. Doing so initializes the whole system.

**What Is Lost:**

- Alarms, supervisories, troubles, security conditions (provided they have returned to the normal state).
- Any user entries such as time and date (MMB-1 only).
- Arm/disarm.
- Manual sensitivity adjustment.
- Time-based control until time is reset (MMB-1 only).

**What Is <u>Not</u> Lost:**

- CSG-M program.



Technical Manuals Online! - http://www.tech-man.com

## Soft Reset

Do a Soft Reset by pressing **RESET** on the MKB. Soft reset does not work until you acknowledge all alarms, supervisories, troubles, and security conditions and silence the System.

**What Is Lost:**

- Alarms, supervisories, troubles, security conditions (provided they have returned to the normal state).
- Arm/disarm (unless option disabled by CSG-M).

**What Is Not Lost:**

- Any user entries such as time and date.
- Arm/disarm (when enabled by the CSG-M).
- CSG-M program.
- Manual sensitivity adjustment.
- Time-based control.

If you press **RESET** before acknowledging all conditions and silencing the audible alarms, the display shows a message similar to one of the following:

```
ALARMS NOT ALL ACKNOWLEDGED YET
```

(or)

```
SUPERVISORY NOT ALL ACKNOWLEDGED YET
```

(or)

```
TROUBLES NOT ALL ACKNOWLEDGED YET
```

(or)

```
SECURITY NOT ALL ACKNOWLEDGED YET
```

(or)

```
AUDIBLES NOT ALL SILENCED YET
```

If your System has a printer, it prints a message similar to the following and adds **SYSTEM NOT RESET** on the bottom line:

```
RESET          12:50:58 Jul 03, 20xx
Not All Acknowledged Yet.  System Not
Reset.
```

When the System performs a Soft Reset, the display shows the following message:

```
System Reset
```

The System then returns to Normal mode and the display shows the following:

```
11:59:59 DEC 31, 20xx      SYSTEM
[custom System message]    NORMAL
```

If your System has a printer, it prints the following message:

```
RESET          12:50:58 Jul 03, 20xx
System Reset.
```

If the System is already in Normal mode when you press **RESET**, it displays

```
SYSTEM ALREADY NORMAL
```

and does not reset.



Technical Manuals Online! - http://www.tech-man.com

# Using The MKB Keyboard/Annunciator Panel in Global Mode

The Global MKB Keyboard/Annunciator Panel operates the same as described in *Using The Local MKB Keyboard/ Annunciator Panel*, except as noted below.

## Limitations/Restrictions

- As in all networked MXL Systems, the self-restoring trouble option is not allowed in any MXL.
- An MXL still may only contain a maximum of 4 supervised MKBs. This can be a mix of local and global MKBs.
- BLOCK ACK must be enabled in the CSG-M.
- The maximum number of supervised Global MKBs is 10.
- The maximum number of Global Printers is 2 (not TSP-40s).

## Global MKB Display Format

In order to insert the XNET node information and provide an indication of the number of events in the System, some of the characters in the first and second lines have been lost.

NN = NODE # (1 - 64)
MMM = MODULE # (1 - 253)
DDD = DEVICE # (1 - 254)

### ALARM

The 3 event displays are formatted as follows for an alarm condition:

```
NN:MMM-DDD [custom message] ACK
1 [time/date]             IN ALR
```

```
NN:MMM-DDD [custom message] ACK
1 [device type]           IN ALR
```

```
ALARMS=1           SUPERVISORY=0
TROUBLES=0            SECURITY=0
```

### SUPERVISORY

The 3 event displays are formatted as follows for a supervisory condition:

```
NN:MMM-DDD [custom message] ACK
1 [time/date]                IN SUP
```

```
NN:MMM-DDD [custom message] ACK
1 [device type]              IN SUP
```

```
ALARMS=0           SUPERVISORY=1
TROUBLES=0            SECURITY=0
```

### TROUBLE

The 3 event displays are formatted as follows for a trouble condition:

```
NN:MMM-DDD [custom message] ACK
23 [trouble type]            IN TRB
```

```
NN:MMM-DDD [custom message] ACK
23 [time/date]               IN TRB
```

```
ALARMS=0           SUPERVISORY=0
TROUBLES=23           SECURITY=0
```



Technical Manuals Online! - http://www.tech-man.com

**SECURITY**
The 3 event displays are formatted as follows for a security condition:

```
NN:MMM-DDD [custom message] ACK
2 [time/date]               IN SEC
```

```
NN:MMM-DDD [custom message] ACK
2 [device type]             IN SEC
```

```
ALARMS=0          SUPERVISORY=0
TROUBLES=0           SECURITY=2
```

Leading zeros are not included in addresses and counts.

Additional data causes a three character shift right, resulting in the loss of three characters from the displayed message.

Additional data also causes a two character shift to the right, resulting in the loss of two characters of the device or trouble type.

The System queue totals are over 10,000 events. This expands the event number fields to 5 digits from 3. The order of these events is as follows:

- Queue priority (Alarm, Supervisory, Trouble, Security).
- Time and date of event (newest first).
- If the two previous items are identical, the lower node number takes priority.

## Global Keypad Operation

**BLOCK ACK**
Global block acknowledgment operates as in a standalone MXL, but with global scope. Events for the queue acknowledge System wide (all nodes).

Pressing a global **BLOCK ACK** key results in a broadcast XNET message to all nodes to acknowledge all events in that queue. Panels process the event just as if the key press had occurred at one of its MKBs. A success code (or error code) is sent to the NODE that initiated the global acknowledge.

An acknowledgment message is displayed and printed (and the appropriate LED is updated) when the MXL determines all events at that level have been acknowledged (System wide). The time/date stamp of an event is used to determine the true state of the System.

LEDs are not updated unless all nodes confirm the acknowledgment has been successfully executed.

**AUD SILENCE**
This key is NOT a toggle as in a local mode. If silenceable audibles are active anywhere in the System, the LED flashes.

When the global **AUD SILENCE** key is pressed with any/all audibles in the System unsilenced, a global silence command is issued. The command is processed in the nodes as if a local audible silence had been requested.

Command preprocessing is in place to prevent silenceable audibles from getting out of sync (some systems on, some systems off) on a System basis. No audibles will be silenced unless all can be silenced. However, in cases where local control is enabled, this may


Technical Manuals Online! - http://www.tech-man.com

be unavoidable. An error code (or success via a silence event message) allows the global MKB to keep up to date as to true System status. If any panel reports an error, the display status remains unchanged.

When the global **AUD SILENCE** key is pressed with all audibles in the System silenced, a global unsilence command is issued. The command is processed in the nodes as if a local audible unsilence had been requested. An error code (or success via a silence event message) allows the global MKB to keep up to date as to true System status. **If any panel reports an error, the display status changes since some audibles have been unsilenced.**

#### RESET

When the global reset key is pressed, each node is tested. If all nodes meet the conditions required for reset, the reset command is sent and executed. Otherwise, the corresponding error message is displayed.

#### NEXT

This key operates the same as in the local mode. However, it moves the user through the System events globally in the priority order established earlier.

#### HOLD

This key operates the same as in the local mode.

#### Function Keys

These keys operates the same as in the local MKB.

#### Numeric Keypad

These keys operates the same as in the local MKB.

## Voice Operations

The Voice operations usually begin by pressing one of the VSM switches applying to the four main categories: **Page**, **Evac**, **Alert**, or **Other**. (If the System is in alarm, you will usually start by pressing **ALARM ACK** to acknowledge the alarm.) The Voice operations can be done when the System is operating normally or when it is in alarm. They can be done under one-channel, two-channel, or three-channel configurations.

### The Four Categories of Sound

The MXLV has four categories of sound. They are, in order of decreasing priority, **Page**, **Evac**, **Alert**, and **Other**. Page is the human voice speaking into a microphone or telephone. You will program the sounds (or tones) for the other categories using CSG-M (See the ***CSG-M Programming Manual,*** P/N 315-090381). A tone can be broadcast to all zones at once or to selected zones.



Technical Manuals Online! - http://www.tech-man.com

### Page

Page is the highest priority in the System and supersedes all of the other categories. It consists of a live voice announcement made using the microphone or telephone handset at the command console, or using a remote telephone. (Using a remote telephone is called **Warden's Page;** see the discussion that follows.)

### Evac

Evac is the second highest priority. It supersedes an **Alert** or **Other** tone, but is superseded by a **Page** announcement. You can program the tone you want for this signal using CSG-M; for example, a series of whoops to signal an evacuation. You can send this tone to all zones or to selected zones. When superseded in a particular zone, an **Evac** will become active again when the **Page** is finished.

### Alert

Alert is the third highest priority. It supersedes an **Other** tone, but will be superseded by a **Page** announcement or an **Evac** tone. You can program the tone you want for this signal using CSG-M; for example, a wailing tone to signal an important event, but one not serious enough to warrant an **Evac** tone. You can send this tone to all zones or to selected zones. When superseded in a particular zone, an **Alert** will become active again when the **Evac** or **Page** is finished.

### Other

Other is the lowest priority and is superseded by a **Page** announcement or an **Evac** or **Alert** tone. **Other** is a multipurpose category, hence its name; it can be supplied by an MXLV-resident tone generator or an external audio source (a background music system). Press **EXT SOURCE** to select the external source.

You can relabel the **Other** function buttons **ALL OTHER** and **SEL OTHER** to identify the kind of audio available in the **Other** Category (e.g., **ALL MUSIC, SEL MUSIC**).

**NOTE:** When a tone, such as **Alert,** is superseded by a higher priority tone, such as **Evac,** the lower priority tone reactivates once the higher priority tone is deactivated. You can avoid this by deactivating the lower priority tone *before* activating the higher priority tone.

## Standard Tones

The following tones are provided as standard. Use CSG-M to program the tones you wish to use in your system.

- Slow Whoop
- 900 Hz steady
- 900 Hz pulsed at 120 ppm
- 900 Hz pulsed at 30 ppm
- Chime
- Horn
- California Code
- Wail
- Hi-Lo
- Temporal Code 3
- 2000 Hz
- Yelp
- Yeow



Technical Manuals Online! - http://www.tech-man.com

## LED Visual Indicators

The System uses a different color LED for each tone category so you can easily tell which tone is active in a particular zone:

- **Page** - Green (flash and steady)
- **Evac** - Red steady
- **Alert** - Red flash
- **Other** - Green steady

**Page** zones flash green while you are selecting them and then change to steady green when you press the microphone keyswitch to begin the **Page** announcement.

**Zone** troubles and display functions (for example, **Display Off**) are indicated as follows:

- Trouble - yellow steady
- Display - yellow flash

**Telephone** use is indicated as follows:

- Call-in to be answered - Red flash; also, the Call-in audible alarm pulses.
- Call-in Telephone Enabled - Red steady

## Automatic Voice Operation

You can program the System to operate automatically upon detecting certain conditions (e.g., Alarm, Trouble). See the ***CSG-M Manual,*** P/N 315-090381.

## Manual Voice Operation

You can manually initiate an **Evac** or **Alert** state, or modify an automatically active condition by using Voice Switch Modules (VSM-1). The functions that are available to MXLV Systems are listed by sound category in the *VSM Switches By Function* table.

**VSM SWITCHES BY FUNCTION**

| | |
|---|---|
| **Paging** | ALL CALL<br>SEL PAGE<br>PAGE TO EVAC<br>PAGE TO ALERT<br>PAGE TO OTHER<br>PHONE PAGE<br>WARDEN PAGE |
| **Evacuation** | ALL EVAC<br>SEL EVAC |
| **Alert** | ALL ALERT<br>SEL ALERT |
| **Other** | ALL OTHER<br>SEL OTHER |
| **Utility** | EXT SOURCE<br>CLEAR MANUAL<br>DISPLAY OFF<br>DISPLAY AUTOMATIC<br>CH 1 TO LOCAL SPEAKER<br>CH 2 TO LOCAL SPEAKER<br>CH 3 TO LOCAL SPEAKER<br>LAMP TEST<br>GENERIC |
| **Zone** | SPEAKER<br>SPEAKER ZONE_NS<br>PHONE |
| **For Systems with a Remote Command Station** | REQUEST ACCESS<br>GRANT ACCESS<br>DENY ACCESS |
| **For Remote Systems without an MKB** | ALARM ACK<br>AUD SIL<br>SUPV ACK<br>TRBL ACK<br>SEC ACK<br>RESET |



Technical Manuals Online! - http://www.tech-man.com

## Audibles

### The Error Audible

The System beeps when you press a button incorrectly in a situation or when you violate tone priorities. Some examples are keying the microphone when no zones are selected for a Page, attempting to place a zone in Alert when it already is in Evac, and pressing PAGE TO EVAC when no zones are receiving the Evac tone.

### The Call-In Audible

A series of short beeps sounds at the command console when a remote telephone is attempting to call in. To silence the audible, press the zone button for that zone to select the phone. If applicable, press **WARDENS PAGE** to enable this telephone to be used for a page.

### The Reset Audible

Three short beeps tell you that the System has been initialized and is ready for operator input.

## Using the ALL Buttons

Use the ALL buttons (**ALL CALL, ALL EVAC, ALL ALERT, ALL OTHER**) to activate or deactivate all the voice zones in the System to a particular tone. **ALL CALL** turns off automatically after 2 minutes of inactivity.

## Using the SEL Buttons

Use the SEL (select) buttons (**SEL PAGE, SEL EVAC, SEL ALERT, SEL OTHER**) to activate or deactivate specific zones to the selected tone.

Press the appropriate **SEL** button and a zone button to activate the tone on that zone. Press the zone button again to deactivate that zone. The **SEL** functions turn off automatically after 2 minutes of inactivity. Only one **SEL** function can be active at a time.

**NOTE:** Remember the priorities of the sound categories when using the **ALL** and **SEL** functions: **Page, Evac, Alert, Other.** You will get an error beep if you attempt to institute **ALL ALERT** when **ALL EVAC** is active, since all zones are already receiving the higher priority **Evac** tone. Similarly, you will get an error beep if you press **SEL ALERT** for Zone 5 when Zone 5 is already receiving **Evac.**

## Using the Microphone

Select the zones for paging before pressing the microphone key:

1. Select zones for paging (the LEDs flash green).
2. Press the microphone key.
3. LEDs glow steady green. When the *Ready to Page* LED glows, begin speaking into the microphone.

You can discontinue a paging operation simply by releasing the microphone keyswitch for more than 5 seconds. All zone lights will begin to flash green, and the speaker zones will shut off.

To resume paging to the same zones (those flashing green), follow steps 2 and 3 above.



Technical Manuals Online! - http://www.tech-man.com

If you release the keyswitch for less than 5 seconds, you will *not* cancel the paging operation. Lights remain on and speaker zones remain connected to the Page channel.

To cancel a page, press the zone buttons of the selected zones. *Or,* do nothing; the Page function will automatically cancel after 2 minutes of inactivity.

## Telephone Call-Ins

A Telephone Call-in occurs when a remote telephone is taken off-hook. The call-in is indicated on the command console by a flashing red LED at that telephone's zone button and by the sounding of a Call-in audible. To connect the command console with the remote telephone, press the telephone zone button for that zone. Then, press its Push-to-Talk button to talk on the master telephone.

Select and deselect telephone zones in your System that have called in by pressing their zone selection buttons. You cannot enable a zone that is *not* calling in.

## Phone Page and Warden's Page

You can use either the master telephone or a remote telephone to page. But **the microphone will always override a telephone.** Thus, if a remote telephone is being used for a page, you can cut in with the microphone to make an emergency announcement.

*Paging with the master telephone is the same as using the microphone.* To page from the master telephone:

- Press the button for the page category that applies: **ALL CALL, SEL PAGE, PAGE TO EVAC, PAGE TO ALERT,** or **PAGE TO OTHER.**
- If applicable, press zone buttons to select the zones to be paged.
- Press **PHONE PAGE.**
- Press the Push-to-Talk button on the telephone and speak.

Paging from a remote telephone (**Warden's Page**) is similar:

- Take the remote telephone off-hook. The Call-in audible sounds at the command console.
- Press that zone's selection button to enable the remote telephone.
- Press the button for the page category that applies: **ALL CALL, SEL PAGE, PAGE TO EVAC, PAGE TO ALERT,** or **PAGE TO OTHER.**
- If applicable, press zone buttons to select the zones to be paged.
- Press **WARDENS PAGE.**
- The person at the remote telephone presses the Push-to-Talk button on the telephone and speaks.

## Voice Audible Silence

You can silence or unsilence all Voice audibles, whether manual or automatic, by pressing **AUD SIL** on the MKB. You can individually silence automatic activations by pressing the zone buttons after the alarm is acknowledged.



Technical Manuals Online! - http://www.tech-man.com

## Using the Utility Functions

### EXT SOURCE

Used to select and deselect an external source for the **OTHER** sound category. Can be selected only when there are no alarms present in the System. (Press **ALL OTHER** or **SEL OTHER** and specific zone buttons to select which zones are to receive the **EXT SOURCE** audio.)

The **EXT SOURCE** mode is automatically cancelled when an emergency arises.

### CLEAR MANUAL

Press to permanently clear all manual activations; automatic activations remain. Can be used at any time, and turns off automatically after all manual activations are cleared.

**NOTE:** To *temporarily* turn off all activations without losing them, press **AUD SIL** on the MKB.

### DISPLAY OFF

Causes the yellow LED to flash on all zones that are active but currently silenced. Can be turned off manually by pressing it again, and turns itself off after 2 minutes.

Press a zone's selector button to delete it from the list of silenced zones. The zone's yellow LED will stop flashing, indicating that the zone is no longer silenced, or even active, and thus will not reactivate when audibles are unsilenced.

### DISPLAY AUTOMATIC

Causes the yellow LED to flash on all zones that are automatically activated, whether silenced or not. It can be manually turned off by pressing it again, and will turn itself off after 2 minutes.

### AUDIO PREVIEWING

Use the following functions to preview audio at the speaker on the MMM-1:

- Ch 1 to Local Speaker
- Ch 2 to Local Speaker
- Ch 3 to Local Speaker

## Remote Command Stations

The Voice System supports the use of up to three Remote Command Stations, any of which can control the Voice System independently. Each station is an exact duplicate of the Master Control Station. Only one command station can be active at a time. The active Command Station is indicated by a green LED at the request access switch. The following function switches control access to the Remote Command Station:

### REQUEST ACCESS

Pressed at an inactive Remote Station to request control.

### GRANT ACCESS

Pressed at the controlling console to grant control to a different console.



Technical Manuals Online! - http://www.tech-man.com

**DENY ACCESS**
Pressed at the controlling console to deny control to a console requesting it. The requesting console will automatically receive access after a preprogrammed period if **DENY ACCESS** is *not* pressed.

## Selecting the External Source

The **Other** signal shares the microphone with the audio channel (Channel 1). You can have the System select the **Other** signal automatically using event logic or you can select it manually using **SEL OTHER.**

Pressing **EXT SOURCE** lights an LED next to that button and transfers the audio source for the **Other** signal from an internal device such as a tone generator or message player to an external source.

## Telephone Operation

The MXLV can support 5 active remote telephones at one time on a single zone or spread across several zones.

**To use a remote telephone:**

- Take the phone off the hook or plug it in. You will hear a steady tone (if the dial tone was selected in CSG-M) until your zone is selected at the command console.
- Speak into the telephone. Any other telephones on the same zone that are taken off the hook are immediately connected to the common talk line. Telephones from different zones must be selected at the command console before they can join the common talk line.

**Telephone Zone LEDs**
A call-in from any telephone zone causes the zone's red LED to flash and the call-in audible to sound. When you press the switch for that zone, the audible goes silent and the LED glows steady. The zone is then connected to the common talk line and can communicate with the telephone at the command console. A subsequent zone that calls in repeats this procedure.

A fault in a telephone zone is signified by a steady yellow LED and a pulsing trouble audible. (Press **TROUBLE ACK** to acknowledge the trouble and silence the trouble audible.)

**Auto Telephone Zones in Wardens Page**
You can program your System in CSG-M to select any telephone zone as an **Automatic All Call Warden Page Zone.** Any such zone is automatically connected to the microphone channel when its phone is taken off the hook or plugged in. At the same time, all *speaker* zones so selected in CSG-M become active on the selected channel. (Speaker zone LEDs flash green and then change to steady green as they become active.)

**NOTE:** The FT-302 remote phone must be used in this application.



Technical Manuals Online! - http://www.tech-man.com

**VSM SWITCH USAGES**

| | |
|---|---|
| **ALL CALL** | To page all speaker zones. |
| **SEL PAGE** | To select individual speaker zones to be paged. |
| **PAGE TO EVAC** | To page all zones receiving the EVAC tone. |
| **PAGE TO ALERT** | To page all zones receiving the ALERT tone. |
| **PAGE TO OTHER** | To page all zones receiving the OTHER tone. |
| **PHONE PAGE** | To page from the master telephone handset. (Select zones for paging using one of the PAGE buttons listed above and, if necessary, the zone selection buttons *before* pressing PHONE PAGE) This could be used as a backup for the microphone if the microphone is inoperable. |
| **WARDENS PAGE** | Allows any on-line, remote telephone to page. (Select zones for paging using one of the PAGE buttons listed above and, if necessary, the zone selection buttons *before* pressing WARDENS PAGE.) |
| **ALL EVAC** | To activate all speaker zones to receive the EVAC tone. |
| **SEL EVAC** | To select individual zones to receive the EVAC tone. |
| **ALL ALERT** | To activate all speaker zones to receive the ALERT tone. |
| **SEL ALERT** | To select individual zones to receive the ALERT tone. |
| **ALL OTHER** | To activate all speaker zones to receive the OTHER sound. |
| **SEL OTHER** | To activate individual zones to receive the OTHER sound. |
| **EXT SOURCE** | Connects an external audio source to supply the OTHER sound. |
| **CLEAR MANUAL** | Permanently clears all manual speaker zone selections. |
| **DISPLAY OFF** | To turn off LEDs that showed zones currently active for a particular tone. The zones are still active. |
| **DISPLAY AUTOMATIC** | Shows, via yellow flashing LEDs, the zones that have been activated automatically, whether currently silenced or not. |
| **CH 1 TO LOCAL SPEAKER** | To preview the audio available on Channel 1 to a speaker on the control panel. |
| **CH 2 TO LOCAL SPEAKER** | To preview the audio available on Channel 2 to a speaker on the control panel. |
| **CH 3 TO LOCAL SPEAKER** | To preview the audio available on Channel 3 to a speaker on the control panel. |
| **LAMP TEST** | To test all LEDs on VSM, VLM, and VFM. |
| **OVERRIDE_DMC1** | To manually override the DMC-1 message unit with the selected ACM-1 backup tone. |
| **OVERRIDE_DMC2** | To manually override the DMC-1 message unit with the selected ACM-1 backup tone. |
| **REQUEST ACCESS** | Allows a remote command console to request control of the system. |
| **GRANT ACCESS** | Allows the active command console to grant control to a remote console. |
| **DENY ACCESS** | Allows the active command console to deny control to a remote console. Command is granted automatically if DENY ACCESS is not pressed within a preset time period. |
| **GENERIC** | To preview the audio available on Channel 3 to a speaker on the control panel. |



Technical Manuals Online! - http://www.tech-man.com

# VOICE SYSTEM OPERATION OVERVIEW

1. Choose the desired operation from the vertical columns.
2. Perform the steps in order in that column.

| | | VOICE OPERATION TYPE | | | | | | | | |
|---|---|---|---|---|---|---|---|---|---|---|
| | STEPS | All Call Page | Selective Zone Page | Manual All Evac | Selective Evac | All ALert | Selective Alert | All Other | Selective Other | Audible Silence |
| 1 | Press ALARM ACK to acknowledge the alarm | | | | | | | | | x |
| 2 | Press ALARM SILENCE to silence all the alarms, or silence selective zones by pressing their buttons. | | | | | | | | | x |
| 3 | Press: | | | | | | | | | |
| | ALL CALL or ALL PAGE | x | | | | | | | | |
| | SELECTIVE PAGE | | x | | | | | | | |
| | ALL EVAC | | | x | | | | | | |
| | SELECTIVE EVAC | | | | x | | | | | |
| | ALL ALERT | | | | | x | | | | |
| | SELECTIVE ALERT | | | | | | x | | | |
| | ALL OTHER | | | | | | | x | | |
| | SELECTIVE OTHER | | | | | | | | x | |
| 4 | Press buttons for zones to receive the signal. (Zone LEDs will light.) (Press again to cancel a selection.) | | x | | x | | x | | x | |
| 5 | Remove microphone from holder. Press and hold key switch. | x | x | | | | | | x | |
| 6 | When pre-announce tone ends and Ready to Page LED lights, continue holding key switch and speak into the microphone. | x | x | | | | | | x | |



Technical Manuals Online! - http://www.tech-man.com

# Networked Voice Operation

The MXLV System may operate in a network of MXL control panels. There are two styles of networked MXLV Systems:

- networked OCC-1 only
- networked ACM-1 and/or OCC-1

## Networked OCC-1

Operation of an MXLV control panel in a networked OCC-1 style MXLV System is similar to the operation of a non-networked MXLV control panel. Each of the VSM-1 switches operates exactly as it would in a standalone MXLV environment.

## Networked ACM-1

Additional VSM-1 switches are necessary when using a networked ACM-1 style system. These new switches and their usages are defined below.

## Existing MXLV VSM-1 Switches

In MXL firmware prior to Rev. 7.0, VSM-1 switches continue to operate as normal. However, activations such as ALL_CALL and ALL_EVAC are considered local. All XNET nodes with the same local audio group number will respond to these activations. Refer to ***CSG-M Revision 7.01*** (P/N 315-095005) for further details.

**VSM SWITCH USAGES (Networked Systems Only)**

| | |
|---|---|
| **GLB_REQ_ACS** | To request access for global control when another MXLV currently has global control of the entire voice system. |
| **GLB_GRNT_ACS** | To grant access to another MXLV which is requesting access for global control. |
| **GLB_DENY_ACS** | To deny access to another MXLV which is requesting access for global control. |
| **Upon gaining access to global control:** | |
| **GLB_ALL_CALL** | To activate a PAGE to all speaker zone outputs connected to the MXLV network. Every local paging riser must be available for GLB_ALL_CALL to operate. |
| **GLB_PG_AVAIL** | To activate a PAGE to all available speaker zone outputs connected to the MXLV network. Use this function switch when GLB_ALL_CALL fails. |
| **GLB_ALL_EVAC** | To activate an EVAC signal to all speaker zone outputs connected to the MXLV network. |
| **GLB_ALL_ALERT** | To activate an ALERT signal to all speaker zone outputs connected to the MXLV network. |
| **GLB_ALL_OTHER** | To activate an OTHER signal to all speaker zone outputs connected to the MXLV network. |
| **GLB_PG_EVAC** | To activate a PAGE to all zones receiving the EVAC signal on the MXLV network. |
| **GLB_PG_ALRT** | To activate a PAGE to all zones receiving the ALERT signal on the MXLV network. |
| **GLB_PG_OTHR** | To activate a PAGE to all zones receiving the OTHER signal on the MXLV network. |
| **GLB_ALM_ACK** | These functions mimic the operation of the corresponding keys on a global MKB. (At least 1 Global MKB must be configured for these switches to operate.) |
| **GLB_SUPV_ACK** | |
| **GLB_TRBL_ACK** | |
| **GLB_SEC_ACK** | |
| **GLB_AUD_SIL** | |
| **GLB_MXL_RES** | |



Technical Manuals Online! - http://www.tech-man.com

# Using The Menu

The menu gives you wide control of the MXL System. You may use the menu no matter what mode the System is in.

### General Instructions for Navigating the Menu

The five Main Menu items and their subitems are shown in the MXL Menu Structure chart on pages 3-28 and 3-29. Use the command keypad and the numeric keypad when working with this menu. (See the *Command Keypad* and *Numeric Keypad* sections discussed previously in this chapter.)

Press **ENTER** to begin a menu session. The second line of the display shows the Main Menu items:

```
11:59:59 DEC 31, 20xx SYSTEM
Acknowledge List Control Test >    NORMAL
```

Use the right (➢) or left (⮜) arrow keys to scroll through each menu item — the first letter of each menu item will blink as it is highlighted. Press **ENTER** to select it and move to the next menu level.

**NOTE:** If you are in the menu and do not depress an arrow key, a number or the **ENTER** key at any time during a one-minute period, the System returns to the previous item.

To end a menu session and return to the Main Menu or to leave the menu at any time, press the Up (⮝) arrow key to go backward one menu level each time.

### Entering Your Password

If you select **Control, Test,** or **Walktest,** the System asks for your password:

```
ENTER YOUR PASSWORD:
```

Type your (1-5 digit) password, using the numeric keypad. The System shows an asterisk for each digit that you type. (Use the Left arrow key to erase an error.)

When you have typed the entire password, press **ENTER.** If your password does not match a password stored in the System, the System briefly displays the following message and then returns you to the first password display:

```
Access Denied
```

If your password level is not high enough to use these functions, the System briefly displays the following message and then returns you to the first password display:

```
Password Level Not High Enough
```

**PASSWORD LEVELS**

| Rev 9.0 and Above | |
|---|---|
| **Highest** | Test |
| ⇩ | Control |
| **Lowest** | Walktest |
| **Below Rev 9.0** | |
| **Highest** | Walktest |
| ⇩ | Test |
| **Lowest** | Control |



Technical Manuals Online! - http://www.tech-man.com

The System gives you three chances to enter an acceptable password before it returns you to the Main Menu.

If the System accepts your password, it displays the **Control, Test** or **Walktest** menu (discussed later in this chapter).

## Addresses

All modules and devices annunciated on the MXL are identified by an address (MMM-DDD). Each address is in two parts: a module address (MMM) and a device address (DDD). The number identifying the module may be as high as 253, and the number identifying the device may be as high as 254. Always enter all leading zeros for module and device addresses.

### Entering a Module Number and Device Number

The System asks you to supply a module number or device number, or both, during certain functions described in the pages that follow. The terms **module number** and **module address** are used interchangeably in this manual. (Refer to the **Device Addresses By Module Type** table.)

### Entering a Module Number

When the System displays the following:

```
Type In Module Number:
```

Type all three digits (MMM), including leading zeros, and press **ENTER.** (When you type the module number, use the Left arrow key as a backspace key to erase errors.)

**DEVICE ADDRESSES BY MODULE TYPE**

| Module Type | Device Type | Device Address (Range) |
|---|---|---|
| MMB-1/-2 | Common Alarm Relay | 001 |
| | Common Trouble Relay | 002 |
| | Supervisory or User Programmable Relay | 003 |
| | NAC 1 | 004 |
| | NAC 2 | 005 |
| | Pseudo Points | 006-250 |
| CSM-4 | Circuit 1 | 001 |
| | Circuit 2 | 002 |
| | LED 1 | 005 |
| | LED 2 | 006 |
| CRM-4 | Relay 1 | 001 |
| | Relay 2 | 002 |
| | Relay 3 | 003 |
| | Relay 4 | 004 |
| | LED 1 | 005 |
| | LED 2 | 006 |
| CZM-4 | Zone 1 | 001 |
| | Zone 2 | 002 |
| | Zone 3 | 003 |
| | Zone 4 | 004 |
| | LED 1 | 005 |
| | LED 2 | 006 |
| ALD-2I | Loop 1 Devices | 001-060 |
| | Loop 2 Devices | 001-060 |
| XLD-1 | Loop 1 Devices | 001-030 |
| | Loop 2 Devices | 001-030 |
| | Loop 3 Devices | 001-030 |
| | Loop 4 Devices | 001-030 |
| PSR-1 | Any Trouble Relay | 001 |
| | Any Alarm Relay | 002 |
| | Tamper | 003 |
| | AC Transfer Logic | 004 |
| | Disable +5V Relay | 005 |
| | Disable Battery Charger | 006 |
| MOI-7 | MOD-16 or MID/16 #1 | 001-016 |
| | thru | thru |
| | MOD-16 or MID-16 #8 | 113-128 |
| | VPM-5 #1 | 129-138 |
| | thru | thru |
| | VPM-5 #12 | 239-248 |
| ACM-1 | VSM-1 or VLM-1 or VFM-1 | 001-008 |
| | | thru |
| | | 241-248 |
| OCC-1 | ASC-1 or ASC-2 or ZAC-30 or ZC1-8B or ZC2-4AB or ZC2-8B or ZC3-4AB or ZCT-8B | 001-008 |
| | | thru |
| | | 081-088 |
| PSEUDO | Pseudo Point | 001-254 |



Technical Manuals Online! - http://www.tech-man.com

### Entering a Device Number with the Module Number

When the System displays the following:

```
Type In Module & Device:  -
```

Type all of the digits (MMM-DDD), including leading zeros, and press **ENTER.** (When you type the module number and the device number, use the Left arrow key as a backspace key to erase errors.)

## The Acknowledge Menu

The Acknowledge menu has four items from which to choose;

```
Alarm Supervsry Trouble Security
```

Use this menu to individually acknowledge alarms, supervisories, troubles, and security conditions.

### Acknowledge: Alarm

Use this function to individually acknowledge alarms.

**If there is no current alarm,** the System briefly displays the following message and then returns you to the Acknowledge menu:

```
No Alarm Exists
```

(If your System has a printer, it prints the above message as well.)

**If all the alarms are acknowledged,** the System displays the following message and then returns you to the Acknowledge menu:

```
All Alarms Acknowledged
```

(If your System has a printer, it prints the above message as well.)

**If there is at least one unacknowledged alarm,** the menu shows the most recent unacknowledged alarm on both lines of the display, as in the following:

```
29-041 [custom message]
007 [device type]        IN ALR
```

In the previous display, **29** is the module number, **041** is the device number, the message on the first line is the custom message for the device at that location, **007** indicates that this is the seventh alarm, **[device type]** indicates the type of device in alarm, and **IN ALR** indicates that this is an alarm.

Press **ENTER** to acknowledge the alarm shown.

The System prints a message similar to the following and removes that alarm from the unacknowledged alarm list:

```
ACK Alarm  29-041 16:11:41 Aug 2, 20xx
#7 [custom message], [device type]
```

In the previous message, the time and date are the time and date that the alarm was acknowledged and **29-041** is the address. The System then displays the next alarm to acknowledge.

To skip an alarm shown, press **NEXT.** The System displays the next alarm in the series. When the System has displayed all of the unacknowledged alarms, it returns to the first Acknowledge menu:

```
Acknowledge: Alarm Supervisry
```



Technical Manuals Online! - http://www.tech-man.com

# MXL Menu

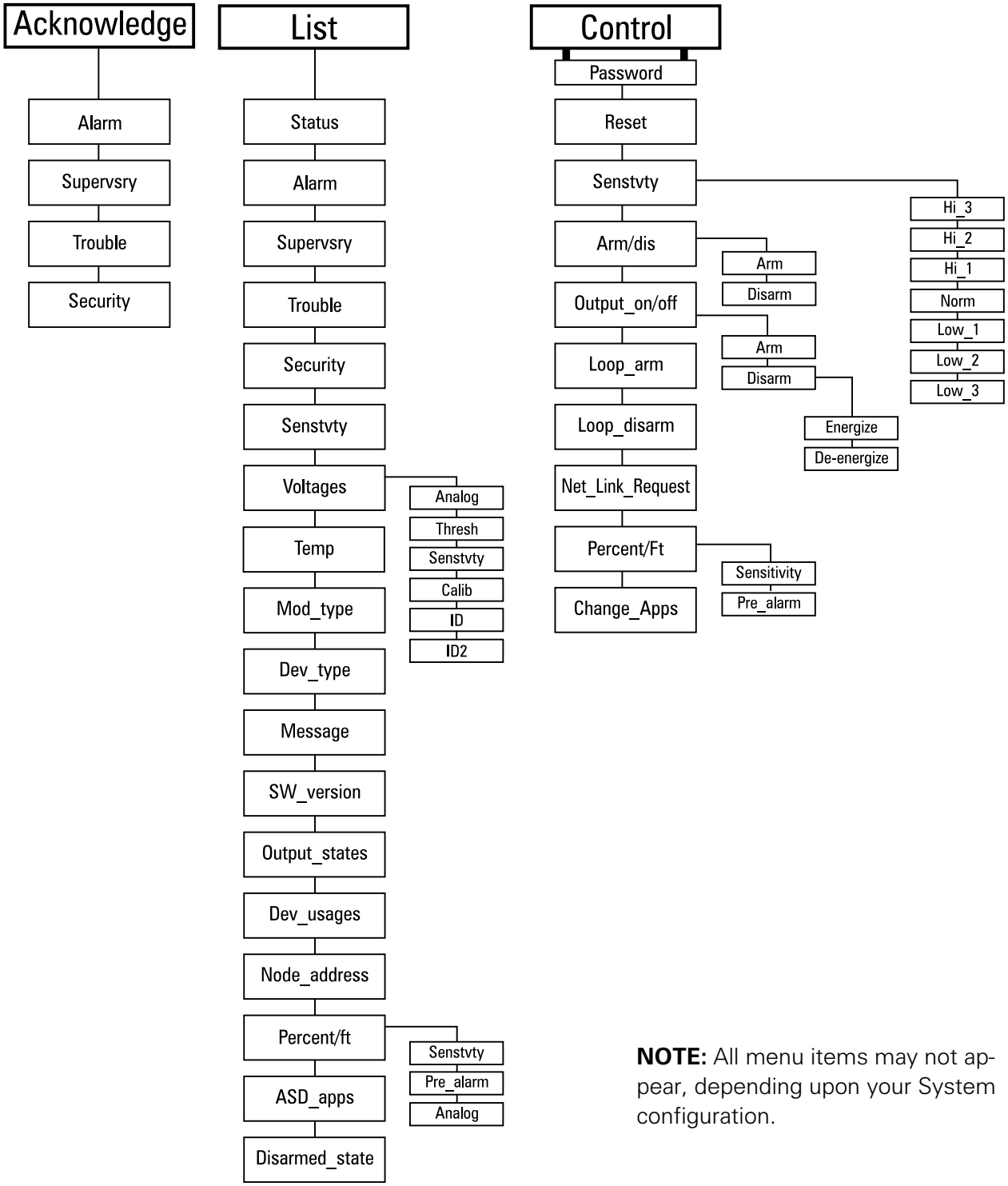


**NOTE:** All menu items may not appear, depending upon your System configuration.



Technical Manuals Online! - http://www.tech-man.com

# MXL Menu

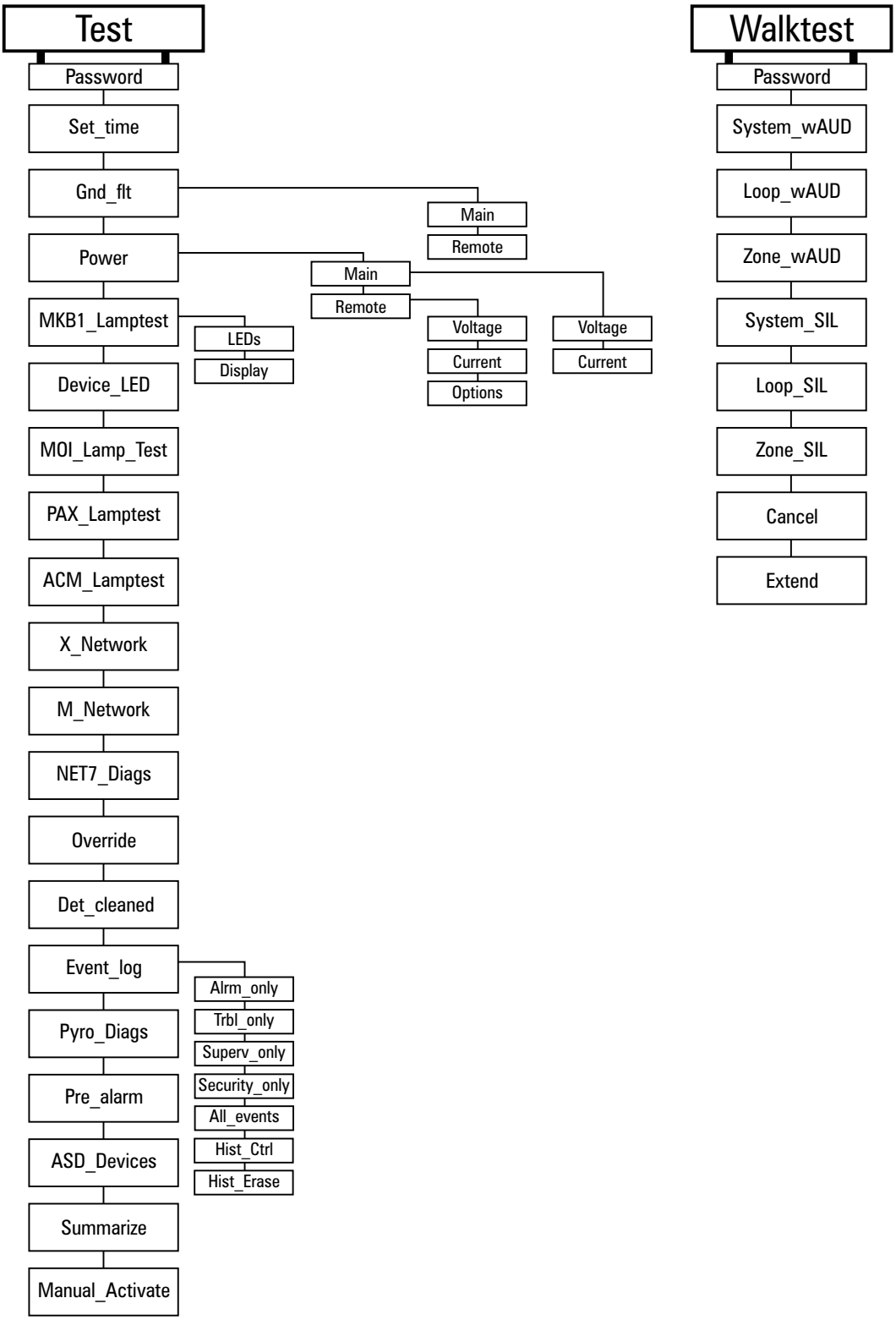




Technical Manuals Online! - http://www.tech-man.com

**Acknowledge: Supervsry**
Use this function to individually acknowledge supervisories.

**If there is no supervisory** to acknowledge, the System briefly displays the following message and then returns you to the Acknowledge menu:

```
No Supervisory Exists
```

(If your System has a printer, it prints the above message as well.)

**If all supervisories are acknowledged,** the System briefly displays the following message and then returns you to the Acknowledge menu:

```
All Supervisories Acknowledged
```

**If there is an unacknowledged supervisory,** the System does not let you acknowledge it if there are any unacknowledged alarms. If there is at least one unacknowledged alarm, the System briefly displays the following message and then returns you to the Acknowledge menu:

```
Alarms Not All Acknowledged Yet
```

(If your System has a printer, it prints the above message as well.)

Select **Alarm** and follow the instructions in *Acknowledge: Alarm* previously described.

After you acknowledge all alarms, the System allows you to acknowledge supervisories. If there is at least one unacknowledged supervisory, the menu shows the most recent unacknowledged supervisory on both lines of the display, as in the following display:

```
32-045 [custom message]
012 [device type]        IN SUP
```

In the previous display, **32** is the module number, **045** is the device number, the message on the first line is the custom message for the device at that location, **012** indicates that this is the twelfth supervisory, **[device type]** indicates the type of device causing the supervisory, and **IN SUP** identifies the item as an off- normal supervisory.

Press **ENTER** to acknowledge the supervisory shown. The System prints a message similar to the following and removes that supervisory from the unacknowledged supervisory list:

```
ACK Superv  32-045 16:11:44 Aug 2, 20xx
#12 [custom message], [device type]
```

In the previous message, the time and date are the time and date the supervisory was acknowledged and **32-045** is the address.

The System then displays the next supervisory to acknowledge.

To skip a supervisory, press **NEXT.** The System displays the next supervisory in the series. When the System has displayed all of the unacknowledged supervisories in the System, it returns to the first Acknowledge menu:

```
Acknowledge: Alarm Supervisry
```


Technical Manuals Online! - http://www.tech-man.com

**Acknowledge: Trouble**
Use this function to individually acknowledge troubles.

**If there is no trouble to acknowledge,** the System briefly displays the following message and returns you to the acknowledge menu:

```
No Trouble Exists
```

(If your System has a printer, it prints the above message as well.)

**If all the troubles are acknowledged,** the System displays the following message and returns you to the Acknowledge menu:

```
All Troubles Acknowledged
```

(If your System has a printer, it prints the above message as well.)

**If there is an unacknowledged trouble,** the System does not let you acknowledge it if there are any unacknowledged alarms or supervisories. Follow the instructions in *Acknowledge: Alarm* and *Acknowledge: Supervsry* previously described to acknowledge them.

After you acknowledge all alarms and supervisories, the System allows you to acknowledge troubles. If there is at least one unacknowledged trouble, the System shows the most recent unacknowledged trouble on both lines of the display, as in the following:

```
36-050 [custom message]
018 [trouble type]       IN TBL
```

In the previous display, **36** is the module number, **050** is the device number, the message on the first line is the custom message for that device, **018** indicates that this is the eighteenth trouble, **[trouble type]** indicates the type of trouble, and **IN TBL** identifies the event as the occurrence of a trouble.

Press **ENTER** to acknowledge the trouble shown. The System prints a message similar to the following message and removes that trouble from the unacknowledged trouble list:

```
ACK Trouble  36-050 16:11:44 Aug 2, 20xx
#18 [custom message], [trouble type]
[device type]
```

In the previous message, the time and date are the time and date that the trouble was acknowledged and **36-050** is the address.

To skip a trouble, press **NEXT.** The System displays the next trouble to acknowledge. When the System has displayed all of the unacknowledged troubles, it returns to the first Acknowledge menu:

```
Acknowledge: Alarm Supervisry
```

**Acknowledge: Security**
Use this function to individually acknowledge security conditions.

**If there is no Security condition to acknowledge,** the System briefly displays the following message and then returns you to the Acknowledge menu:

```
No Security Exists
```

(If your System has a printer, it prints the above message as well.)



Technical Manuals Online! - http://www.tech-man.com

**If all security conditions are acknowledged,** the System displays the following message and returns you to the Acknowledge menu:

```
All Securities Are Acknowledged
```

(If your System has a printer, it prints the above message as well.)

**If there is an unacknowledged security condition,** the System does not let you acknowledge security conditions if there are any unacknowledged alarms, supervisories, or troubles. Follow the instructions above to acknowledge any unacknowledged alarms, supervisories, and troubles. Follow the instructions in *Acknowledge: Alarm*, *Acknowledge: Supervsry,* and *Acknowledge: Trouble* previously described to acknowledge them.

After you acknowledge all alarms, supervisories, and troubles, the System allows you to acknowledge security conditions. If there is at least one unacknowledged security condition, the System displays the most recent unacknowledged security condition:

```
42-058 [custom message]
005 [device type]        IN SEC
```

In the previous display, **42** is the module number, **058** is the device number, the message on the first line is the custom message for the device at that location, **005** indicates that this is the fifth security condition, **[device type]** indicates the type of device causing the security condition, and **IN SEC** identifies this as an off-normal security condition.

Press **ENTER** to acknowledge the security condition shown. The System prints a message similar to the following message and removes that security condition from the unacknowledged security list:

```
ACK Security  42-058 16:11:44 Aug 2, 20xx
#5 [custom message], [device type]
```

In the previous message, the time and date given are the time and date when the security condition was acknowledged, and **42-058** is the address.

The System then displays the next security report to acknowledge.

To skip a security condition, press **NEXT.** The System displays the next security condition in the series. When the System has displayed all of the unacknowledged security conditions, it returns to the first Acknowledge menu:

```
Acknowledge: Alarm Supervisry
```

## The List Menu

The List Menu has eighteen items from which to choose. You can generate a printed list or report for every item on the List menu.

Use the List menu to learn:

- Status of the System
- Alarm information
- Supervisory information
- Trouble information
- Security information
- Detector sensitivity
- Detector voltage
  - Analog
  - Threshold
  - Sensitivity



Technical Manuals Online! - http://www.tech-man.com

Calibration (XLD-1 only)
ID1 (XLD-1 only)
ID2 (XLD-1 only)

- Temperature of FP-11 or FPT-11
- Type of module
- Type of device
- Custom message of the given address
- Version of the System software
- Present device output states
- Device usages
- XNET node address
- Percent per foot obscuration
  - Sensitivity
  - Pre-alarm
  - Analog
- Device application (ASD setting)
- Disarmed devices

**List: Status**

The List Status function shows you the number of acknowledged and unacknowledged alarms, supervisories, troubles, and security conditions, in that order.

When you press **ENTER** to select **List Status,** the display first shows the total number of alarms and the number of acknowledged alarms:

```
2 ALARM        2 ALARM ACK
```

To view, in order, the status of supervisories, troubles, and security conditions, press **NEXT.**

After the Security display, the System returns to the List menu. To make a printed list of current status, press **PRINT** when the **S** in **Status** is blinking.

The System will print a listing similar to the following:

```
System Status at 11:02:26 Jul 01, 20xx
 2 ALARM              2 ALARM ACK
 0 SUPERV             0 SUPERV ACK
30 TROUBLE           30 TROUBLE ACK
 0 SECURITY           0 SECURITY ACK
```

In the previously printed message, there are two alarms, both of them acknowledged, no supervisory conditions, 30 trouble conditions, all acknowledged, and no security conditions.

**List: Alarm**

The List Alarm function shows you all the alarms currently in the System in the order they occurred.

**If there is no alarm,** the System briefly displays the following message and then returns you to the List menu:

```
No Alarm Exists
```

**If there is at least one alarm,** the System shows the most recent alarm, alternating between the following two displays:

```
1-001 [custom message]
002 [device type]        IN ALR
```

```
1-001 [custom message]
002 [time/date]          IN ALR
```

Press **NEXT** to show the two displays for the previous alarm in the sequence. (Pressing **HOLD** freezes a display for as long as you keep **HOLD** depressed.)

When the System has shown all current alarms, it returns to the List menu.



Technical Manuals Online! - http://www.tech-man.com

To obtain a full printed list of alarms in the following format—one item for each current alarm, press **PRINT** when the **A** in **Alarm** is blinking:

```
Listing of all Alarms at 14:35:20 Oct 09, 20xx:
ALARM   1-5   14:34:22 Oct 09, 20xx
#1 [custom message], [device type]
```

In the previous listing, **1-5** is the address of the device in alarm, the time is the time the device went into alarm, **#1** is the number of this alarm in the current list, **[custom message]** is the custom message for the device in alarm, and **[device type]** is the type of device in alarm.

#### List: Supervsry

The List Supervsry function shows you all the supervisories currently in the System in the order they occurred.

**If there is no supervisory,** the System briefly displays the following message and then returns you to the List menu:

```
No Supervisory Exists
```

**If there is at least one supervisory,** the System shows the most recent supervisory, alternating between the following two displays:

```
1-001 [custom message]
002 [device type]        IN SUP
```

```
1-001 [custom-message]
002 [time/date]          IN SUP
```

Press **NEXT** to show the two displays for the previous supervisory in the sequence. (Pressing **HOLD** freezes a display for as long as you keep **HOLD** depressed.)

When the System has shown all current supervisories, it returns to the List menu.

To obtain a full printed list of supervisories in the following format—one item for each current supervisory, press **PRINT** when the **S** in **Supervsry** is blinking.

```
Listing of all Supervisory at
14:35:20 Oct 09, 20xx:
SUPERV IN 32-45 14:34:22 Oct 09, 20xx
#7 [custom message], [device type]
```

In the previous listing, **32-45** is the address of the device in supervisory, **#7** is the number of the supervisory in the current list, **[custom message]** is the custom message for the device in supervisory, and **[device type]** is the type of device in supervisory.

#### List: Trouble

The List Trouble function shows you all the troubles currently in the System in the order they occurred.

#### If There Is No Trouble

If there is no trouble, the System briefly displays the following message and then returns to the List menu:

```
No Trouble Exists
```

#### If There Is a Trouble

If there is at least one trouble, the System shows the most recent trouble, alternating between the following two displays:

```
1-001 [custom message]
002 [trouble type]       IN TBL
```

```
1-001 [device type]
002 [time/date]          IN TBL
```



Technical Manuals Online! - http://www.tech-man.com

Press **NEXT** to show the two displays for the previous trouble in the sequence. (Pressing **HOLD** freezes a display for as long as you keep **HOLD** depressed.)

When the System has shown all current troubles, it returns to the List menu.

To obtain a full printed list of troubles in the following format—one item for each current trouble, press **PRINT** when the **T** in **Trouble** is blinking.

```
Listing of all Troubles at 14:35:20
Oct 09, 20xx
TROUBLE IN 29-41 14:34:22 Oct 09, 20xx
#7 [custom message],[trouble
type],[device type]
```

In the previous listing **29-41** is the address of the device in trouble, the time tells when the device went into trouble, **#7** is the number of this trouble in the current list, **[custom message]** is the custom message for the device in trouble, **[trouble type]** is the type of trouble, and **[device type]** is the type of device in trouble.

### List: Security

The List Security function shows you all the security conditions currently in the System in the order they occurred.

**If there is no security condition,** the System briefly displays the following message and then returns you to the List menu:

```
No Security Exists
```

**If there is at least one security condition,** the System shows the most recent security condition, alternating between the following two displays:

```
1-001 [custom message]
002 [device type]        IN SEC
```

```
1-001 [custom message]
002 [time/date]          IN SEC
```

Press **NEXT** to show the two displays for the previous security condition in the sequence. (Pressing **HOLD** freezes a display for as long as you keep **HOLD** depressed.)

When the System has shown all current security conditions, it returns to the List menu.

To obtain a full printed list of security conditions in the following format — one item for each current security condition, press **PRINT** when the **S** in **Security** is blinking.

```
Listing of all Security at 14:35:20
Oct 09, 20xx
SECURTY IN 29-42 14:34:22 Oct 09, 20xx
#7 [custom message], [device type]
```

In the previous listing **29-42** is the address of the device causing the security condition, the time when the device caused the security condition, **#7** is the number of this security condition, **[custom message]** is the custom message for the device causing the security condition, and **[device type]** is the type of device causing the security condition.



Technical Manuals Online! - http://www.tech-man.com

### List: Senstvty

Use List Senstvty to show sensitivity settings of individual smoke detectors on analog loops.

**To display the sensitivity setting of one device,** press **ENTER** to select **Sensitivity.** The System asks you for a module and device number:

```
Type In Module & Device:   -
```

Type the three-digit module number and three-digit device number using the numeric keypad and press **ENTER.**

The System displays the sensitivity setting of the device specified (*High, Med, Normal,* or *Low* for XLDs and *Hi_3, Hi_2, Hi_1, Norm, Low1, Low2* or *Low3* for ALDs).

Press **NEXT** to display the address and sensitivity setting of each smoke detector. When the System has shown the sensitivity settings of all smoke detectors on that analog loop, it returns to the List menu.

To leave the Sensitivity menu without going through the entire analog loop, press the Up arrow (⮝) key. The System displays the List menu.

**To print the sensitivity setting of all smoke detectors assigned to a specified module,** press PRINT when the **S** in **Senstvty** is blinking. The System then asks for a module number. (An XLD-1 module address contains and prints only 30 devices; An ALD-2I module address contains and prints 60 devices.)

```
Type In Module Number:
```

Type the three-digit module number and press **ENTER.**

**NOTE:** ALD-2I modules have *two* sequential module numbers—one for each loop. XLD-1 modules have *four* sequential module numbers—one number for each analog loop.

The System prints the sensitivity settings (*High, Med, Norm, Low,* or ... if there is no smoke detector) of all the devices assigned to the analog loop.

```
Sensitivities for module 1
 1-NORM  2-NA    3-NORM  4-NORM ...
11-NORM 12-NORM 13-NA   14-NA   ...
21-NA   22-NA   23-NA   24-NA   ...
31-NA   32-NA   33-NA   34-NA   ...
41-NA   42-NA   43-NA   44-NA   ...
51-NA   52-NA   53-NA   54-NA   ...
```

**NOTE:** You cannot print the sensitivity setting of a single smoke detector.

### List: Voltages

Use List Voltages to show the voltages of initiating devices on analog loops.

**To display the voltage of one device,** press **ENTER** to select **Voltages.** The System asks you for a module number and device number.

```
Type In Module & Device:   -
```

Type the three-digit module number and three-digit device number using the numeric keypad and press **ENTER.** The System shows the following menu for that device (the **A** in **Analog** will be blinking):

```
001-001 Analog Thresh Sens
```

**NOTE:** ALD-2I modules have *two* sequential module numbers—one for



Technical Manuals Online! - http://www.tech-man.com

each loop. XLD-1 modules have *four* sequential module numbers—one number for each analog loop.

**List: Voltages - Analog**
The display for Analog voltage is similar to the following (readings are dynamic):

```
001-001 ANALOG2 = 2.75 VOLTS
```

**List: Voltages - Thresh**
The display for Threshold voltage is similar to the following:

```
001-001 THRESHOLD = 4.75 VOLTS
```

**List: Voltages - Sens**
The display for Sensitivity voltage is similar to the following (readings are dynamic):

```
001-001 SENSTVTY = 2.00 VOLTS
```

**NOTE:** Only XLD-1 modules will have the following additional List Voltage menu items (These menu items will *not* appear for ALD-2I modules):

**List: Voltages - Calib**
The display for XLD-1 calibration voltage is similar to the following (readings are dynamic):

```
003-001 CALIBRATION = 4.00 VOLTS
```

**List: Voltages - ID**
The display for XLD-1 ID voltage is similar to the following (readings are dynamic):

```
003-001 ID = 2.00 VOLTS
```

**List: Voltages - ID2**
The display for XLD-1 ID2 voltage is similar to the following (readings are dynamic):

```
003-001 ID2 = 0.00 VOLTS
```

**If a binary data reading (in hexadecimal) is wanted for any of the above voltages,** press the 0 key on the numeric keypad to toggle the display between the VOLTS response and the HEX response. An example of the HEX display is:

```
003-001 ANALOG2 = 16 HEX
```

**NOTE:** When you ask for any voltage, the System displays *Please wait for response* until it receives a reading from the device; if you have just reset the System, it alternates the above message with the message *Device being initialized.*

**If the module number entered is not an analog loop,** the System displays:

```
Not Analog Loop
```

**If the device address has no device assigned by CSG-M,** the System displays:

```
No Device Assigned
```

**When displaying sensitivities, if the device is not a smoke detector,** the System displays:

```
Not a Smoke Detector
```

**To print the voltages of all devices assigned to a specified module,** press **PRINT** when the **V** in **Voltages** is blinking. The System



Technical Manuals Online! - http://www.tech-man.com

asks you for a module number. (An XLD-1 module address contains and prints only 30 devices; an ALD-2I module address contains and prints 60 devices.)

```
Type In Module Number:
```

Type the three-digit module number and press ENTER.

**NOTE:** ALD-2I modules have *two* sequential module numbers—one for each loop. XLD-1 modules have *four* sequential module numbers—one number for each analog loop.

The System shows the following menu for that module (the **A** in **Analog** will be blinking):

```
002-001 Analog Thresh Sens
```

When you select **Analog**, the System prints the analog voltages for all devices assigned to the module in a format similar to the following.
(ND = No Device)

```
Analog voltages for module 1
 1-2.00  2-ND    3-1.87  4-1.50 ...
11-2.87 12-1.75 13-ND   14-ND   ...
21-ND   22-ND   23-ND   24-ND   ...
31-ND   32-ND   33-ND   34-ND   ...
41-ND   42-ND   43-ND   44-ND   ...
51-ND   52-ND   53-ND   54-ND   ...
```

When you select **Thresh,** the System prints the threshold voltages for all devices assigned to the module in a format similar to the following.
(ND = No Device)

```
Threshold voltages for module 1
 1-4.75  2-ND    3-4.87  4-4.75 ...
11-4.87 12-4.75 13-ND   14-ND   ...
21-ND   22-ND   23-ND   24-ND   ...
31-ND   32-ND   33-ND   34-ND   ...
41-ND   42-ND   43-ND   44-ND   ...
51-ND   52-ND   53-ND   54-ND   ...
```

When you select **Sens,** the System prints the Sensitivity voltages for all devices assigned to the module in a format similar to the following. (ND = No Device, or device not a smoke detector)

```
Sensitivity voltages for module 1
 1-2.75  2-ND    3-2.87  4-3.25 ...
11-2.12 12-3.00 13-ND   14-ND   ...
21-ND   22-ND   23-ND   24-ND   ...
31-ND   32-ND   33-ND   34-ND   ...
41-ND   42-ND   43-ND   44-ND   ...
51-ND   52-ND   53-ND   54-ND   ...
```

**NOTE:** Only XLD-1 modules will have the following additional List Voltage menu items. (These menu items will not appear for ALD-2I modules.)

When you select **Calib,** the System prints the calibration voltages for all devices assigned to the XLD-1 in a format similar to the following. (ND = No Device; OVER = Device reading over maximum. OVER usually occurs when the device has been assigned by CSG-M but no device is present.)

```
Calibrations voltages for module 3
 1-ND    2-4.00  3-ND    4-ND   ...
11-ND   12-ND   13-ND   14-ND   ...
21-ND   22-ND   23-ND   24-ND   ...
31-ND   32-ND   33-ND   34-ND   ...
41-ND   42-ND   43-ND   44-ND   ...
51-ND   52-ND   53-ND   54-ND   ...
```

When you select **ID,** the System prints the ID voltages for all devices assigned to the XLD-1 in a format similar to the following. (ND = No Device; OVER = Device reading over maximum. OVER usually occurs when the device has been assigned by CSG-M but no device is present.)



Technical Manuals Online! - http://www.tech-man.com

```
ID voltages for module 3
 1-ND    2-2.00  3-ND    4-ND   ...
11-OVER 12-ND   13-ND   14-ND   ...
21-ND   22-ND   23-ND   24-ND   ...
31-ND   32-ND   33-ND   34-ND   ...
41-ND   42-ND   43-ND   44-ND   ...
51-ND   52-ND   53-ND   54-ND   ...
```

When you select **ID2**, the System prints the second ID voltages for all devices assigned to the XLD-1 in a format similar to the following. (ND = No Device; OVER = Device reading over maximum. OVER usually occurs when the device has been assigned by CSG-M but no device is present.)

```
2nd ID voltages for module 3
 1-ND    2-0.00  3-ND    4-ND   ...
11-OVER 12-ND   13-ND   14-ND   ...
21-ND   22-ND   23-ND   24-ND   ...
31-ND   32-ND   33-ND   34-ND   ...
41-ND   42-ND   43-ND   44-ND   ...
51-ND   52-ND   53-ND   54-ND   ...
```

**List: Temp**

Use List Temp to display the current temperature on the LCD display at the location where the detector is installed. The System as you for a module and device number:

```
Type In Module & Device:   -
```

Type the three-digit module number and three-digit device number using the numeric keypad and press **ENTER**.

If the device is not installed or is not and FP-11 or FPT-11, the system displays the following message:

```
Not Applicable or No Device:
```

If the device is an FP-11 or FPT-11, the temperature is displayed in the following format:

```
001-001     25 DEG C / 77 DEG F
```

Press NEXT to display the temperature of the FP-11 or FPT-11 at the next higher address in the same loop.

To leave the Temp menu without going through all subaddresses, press the Up arrow (⮝) key. The System displays the List menu.

**List: Mod_type**

Use List Mod_type to show the type of a particular module.

**To display the module type of one module,** press **ENTER** to select **Mod_type.** The System asks you for a module number:

```
Type In Module Number:
```

Type the three-digit module number using the numeric keypad and press **ENTER.** The System displays the module type for the module number specified:

```
MOD 074 TYPE: CZM4
```

If you press **NEXT**, the System displays the module type for the next module number in the sequence:

```
MOD 075 TYPE: ALD
```

**NOTE:** If you enter a module number not assigned in CSG-M, the System displays:

```
No Mod Assigned
```

With each press of **NEXT**, the System continues to display module types through number 253, the highest module number allowed by the System. It then returns to the List menu.



Technical Manuals Online! - http://www.tech-man.com

**To print the module type and network address of all modules,** press **PRINT** when the **M** in **Mod_type** is blinking. The System prints a list similar to the following:

```
Listing of Module Types:
  1- V11 ALD              2- V11 ALD
  3- V5 OCC-1             4- V6 ACM-1
  5- V3 NIM-1             6- V2 RCM
251- V4 Annunciator     253- V8 MXL Panel
254- MXL Field Programmer
```

In the previous display, the number following the letter V is the firmware version installed in the module. For example, **V11 ALD** is firmware version 11 in the ALD module.

### List: Dev_Type

Use List Device Type to show the type of a particular device.

**To display the device type of a specified device,** press **ENTER** to select **Dev_type.**

The System asks you for a module and device number:

```
Type In Module & Device:   -
```

Type the three-digit module number and three-digit device number using the numeric keypad and press **ENTER.** The System displays the device type for the address specified:

```
004-001 TYPE: [device type]
```

If you press **NEXT,** the System displays the device type for the next device in the sequence:

```
004-002 TYPE: [device type]
```

With each press of **NEXT,** the System continues to display device types until there are no more devices for that module. The System then returns to the List menu. To proceed to another module, follow the instructions above.

**To print a list of devices assigned to a specified module, press PRINT** when the **D** is blinking to select **Dev_type.** The System asks you for a module number:

```
Type In Module Number:
```

Type only the module number and press **PRINT.** The System prints a list of all device types assigned to the specified module in a format similar to the following:

```
Listing of Device Types Module 1 (ALD):
1-ID-60P Photo Detector        3-ID-60I...
4-ID-60PT Photo/Thermal Det.   5-ID-60I...
6-ID-60PT Photo/Thermal Det.   8-MSI-1...
9-ID-60P Photo Detector       10-ID-60P...
```

### List: Message

Use List Message to show the CSG-M assigned custom message of a particular device.

**To display the device message of a specified device,** press **ENTER** to select **Message.**

The System asks you for a module and device number:

```
Type In Module & Device:   -
```

Type the three-digit module number and three-digit device number using the numeric keypad and press **ENTER**.



Technical Manuals Online! - http://www.tech-man.com

The System displays the message for the address specified:

```
069-001 [custom message]
```

If you press **NEXT**, the System displays the message for the next device number in the sequence:

```
069-002 [custom message]
```

With each press of **NEXT**, the System continues to display device messages until there are no more devices for that module.

To proceed to another module, follow the instructions above.

**To print a list of System Messages for a specified module,** press **PRINT** when the **M** in **Message** is blinking. The System asks you for a module number:

```
Type In Module Number:
```

Type only the module number and press **PRINT**. The System prints a list of all the custom device messages for the specified module in a format similar to the following:

```
Listing of Messages in Module 1 (ALD):
 4-Conf.Rm          5-Cafeteria
 6-Exec. Off. 1     7-Cmptr Rm
 8-Exec. Off. 2     9-Camera Rm
10-Exec. Off. 3    11-Conf. Rm
```

**List: SW_Version**

Use List SW to show:

- System Custom Message
- MXL Firmware Version
- The version of CSG-M used to Create the System
- CSG-M File Name Installed
- Date and Time of Installation

**To display information about the software version of your System,** press **ENTER** when the **S** is blinking to select **SW_Version.**

The System displays the CSG-M assigned System custom message:

```
MSG: [system custom message]
```

Press **NEXT** to display each of the following, in order:

- MXL Version
- CSG Version
- Source
- Date Loaded (CSG-M)
- CSG Source Revision
- Run Time

**To print the information about the software version of your system software,** press **PRINT** when the **S** in **SW_ Version** is blinking.

The System prints this same information:

```
Software Version Information at
11:35:30 Jul 01, 20xx:
Installation: [system custom message]
MXL Node_Address: 2
MXL Version: 8.02
CSG Version: 8.05
Source: NPANEL2
CSG Source Revision: 9
Loaded: 16:09:35 Oct 05, 20xx
```



Technical Manuals Online! - http://www.tech-man.com

**List: Output_states**

Use List Output States to show the current states of individual outputs in the MXL.

**To display the output states of one device,** press **ENTER** to select **Output_states**. The System asks you for a module and device number:

```
Type In Module & Device:   -
```

Type the three-digit module number and three-digit device number using the numeric keypad and press **ENTER**.

The System displays the output state of the device specified.

Press **NEXT** to display the address and output state of each succeeding device. When the System has shown the output states for all devices at that address, it returns to the List menu.

To leave the Output_states menu without going through all subaddresses, press the Up arrow (⮝) key. The System displays the List menu.

**To print the device output state (ON/OFF) of devices assigned to a specified module,** press **PRINT** when the **O** in **Output_states** is blinking. The System then asks for a module number:

```
Type in Module Number:
```

Type the three-digit module number and press **ENTER.**

NOTE: ALD-2I modules have *two* sequential module numbers—one for each loop. XLD-1 modules have *four* sequential module numbers—one number for each analog loop.

The System prints the output state of all the devices for the specified module in a format similar to the following:

```
Listing of Output States for Module 3 (OCC-1):
 1-ZAC-30 Amplifier Zo: OFF    2-ZAC-30 Ampli...
 3-ZAC-30 Amplifier Zo: OFF    4-ZAC-30 Ampli...
 5-ZAC-30 Amplifier Zo: OFF    6-ZAC-30 Ampli...
 7-ZAC-30 Amplifier Zo: OFF    8-ZAC-30 Ampli...
 9-ZAC-30 Amplifier Zo: OFF   10-ZAC-30 Ampli...
11-ZAC-30 Amplifier Zo: OFF   12-ZAC-30 Ampli...
13-ZAC-30 Amplifier Zo: OFF   14-ZAC-30 Ampli...
15-ZAC-30 Amplifier Zo: OFF   16-ZAC-30 Ampli...
17-ZC1-8 Audio Zone Ca: OFF   18-ZC1-8 Audio...
19-ZC1-8 Audio Zone Ca: OFF   20-ZC1-8 Audio...
```

**List: Dev_usages**

Use List Dev_usages to show the uses of individual devices as programmed in the CSG-M.

**To display the usage of one device,** press **ENTER** to select **Dev_usages.**

The System asks you for a module and device number:

```
Type In Module & Device:   -
```

Type the three-digit module number and three-digit device number using the numeric keypad and press **ENTER.** The System displays the use of the device specified (i.e., Alarm, Trouble, or Status):

```
069-001 [usage]
```

Press **NEXT** to display the address and use of each succeeding device. When the System has shown the uses of all devices at that address, it returns to the List menu.



Technical Manuals Online! - http://www.tech-man.com

To leave the Dev_usage menu without going through all subaddresses, press the Up arrow (⮝) key. The System displays the List menu.

**To print the device usages of devices assigned to a specified module,** press **PRINT** when the **D** in **Dev_usages** is blinking. The System asks you for a module number:

```
Type In Module Number:
```

Type the three-digit module number and press **ENTER.** The System prints a list of all the devices assigned to that module in a format similar to the following:

```
Listing of Device Usages for Module 1 (ALD):
 1- Alarm                 3- Alarm
 4- Alarm                 5- Alarm
 6- Alarm                 8- Alarm
 9- Alarm                10- Alarm
11- Alarm                12- Alarm
```

**List: Node_address**

Use List Node_address to display the address of the panel which you are currently using. The System displays in a format similar to the following:

```
Node_Address 3
```

If the panel is not part of a networked System, it displays the following:

```
Not a Networked System
```

**List: Percent/ft**

Use List Percent/ft to show settings in percent/ft obscuration of the ILI and ILP series of detectors.

**To display the percent/ft obscuration of one device,** press **ENTER** to select **Percent/ft.** The System asks you for a module number and device number.

```
Type In Module & Device:   -
```

Type the three-digit module number and three-digit device number using the numeric keypad and press **ENTER.** The System shows the following menu for that device (the **S** in **Senstvty** will be blinking):

```
001-001 Senstvty Pre-alarm Analog
```

**List: Percent/ft - Senstvty**

The display for Sensitivity supplies the current sensitivity as read back from the detector and is similar to the following (readings are dynamic):

```
002-003 Sens 1.4%/ft    Norm
```

**List: Percent/ft - Pre-alarm**

The display for Pre-alarm supplies the current pre-alarm setting read back from the detector and is similar to the following (readings are dynamic):

```
002-004 Pre-alarm 1.4%/ft   Norm
```

**List: Percent/ft - Analog**

The display for Analog supplies the current analog2 readings read from the detector and is similar to the following (readings are dynamic):

```
002-005 Sens 1.4%/ft    Norm
```



Technical Manuals Online! - http://www.tech-man.com

**To print the analog loop's current readings in percent/ft obscuration,** press **PRINT** when the **P** in **Percent/ft** is blinking. The System asks you for a module number.

```
Type In Module Number:
```

Type the three-digit module number using the numeric keypad and press **ENTER.** The System shows the following menu for that device (the **S** in **Senstvty** will be blinking):

```
001-001 Senstvty Pre-alarm Analog
```

The System prints either the Sensitivity, Pre-alarm, or Analog readings of all the devices for the specified module in a format similar to the following (ND = No Device):

```
%/ft sensitivities for module 1
 1-3.00  2-NA    3-1.4   4-3.1  ...
11-ND   12-ND   13-ND   14-ND   ...
21-ND   22-ND   23-ND   24-ND   ...
31-ND   32-ND   33-ND   34-ND   ...
41-ND   42-ND   43-ND   44-ND   ...
51-ND   52-ND   53-ND   54-ND   ...
```

### List: ASD_apps

Use List ASD_apps to display operational characteristics of the ASD devices.

**To display the operational characteristics of one device,** press **ENTER** to select **ASD_apps.** The System asks you for a module and device number:

```
Type In Module & Device:  -
```

Type the three-digit module number and three-digit device number using the numeric keypad and press **ENTER**.

The System displays the currently assigned application for the device specified. (Refer to the chart in **Appendix I- Application Specific Detection**.)

Press **NEXT** to display the address and assigned application of each succeeding device. The System will exit the ASD_Apps menu if there are no more ASD devices in that module.

**To print the operational characteristics of the ASD devices assigned to an ALD Loop,** press **PRINT** when the **A** in **ASD_Apps** is blinking. The System asks you for a module number:

```
Type In Module Number:
```

Type the three-digit module number using the numeric keypad and press **ENTER.** The System prints a list of all the applications currently assigned to all the ASD devices in that ALD loop in a format similar to the following (ND = No Device):

```
ASD Applications for module 1
 1-NONE  2-PARK  3-ND    4-OFFC ...
11-ND   12-ND   13-ND   14-ND   ...
21-ND   22-ND   23-ND   24-ND   ...
31-ND   32-ND   33-ND   34-ND   ...
41-ND   42-ND   43-ND   44-ND   ...
51-ND   52-ND   53-ND   54-ND   ...
```

### List: Disarmed_state

Use List Disarmed_state to show the alarm state of a currently disarmed device.

**To display the alarm state of one module,** press **ENTER** to select **Disarmed_state.** The System displays the following:

```
In_Stat Out_Stat
```

Choose either **Input Status** or **Output Status.** The System then asks you for a module number:



Technical Manuals Online! - http://www.tech-man.com

```
Type In Module Number:
```

Type the three-digit module number using the numeric keypad and press **ENTER.** The System displays OFF NORMAL if the device is active or NORMAL if the device inactive.

**To print the alarm state of devices assigned to a specified module,** press **PRINT** when the **D** in **Disarmed_state** is blinking.

Choose either **Input Status** or **Output Status.** Then type the three-digit module number and press **ENTER.** The System prints a list of the alarm states of all devices assigned to that module in a format similar to the following:

```
Listing of Disarmed Input States for Module 1:
1-ID-60P Photo Detect: NORMAL    2-ID-60P Ph...
3-ID-60P Photo Detect: NORMAL    4-ID-60P Ph...
5-ID-60P Photo Detect: NORMAL    6-ID-60P Ph...
```

## The Control Menu

The Control menu has nine items from which to choose. You must enter your 1-5 digit password before you can use the Control functions.

Use the Control menu to:

- Reset the System
- Change the sensitivity of a smoke detector
- Arm or disarm an initiating device
- Arm an output device
- Disarm and de-energize or energize an output device
- Enable or disable the operation of a loop of ALD-2I initiating devices
- Send a request to the Network Command Center (NCC) to disconnect the MXL from the network
- Change sensitivity and pre-alarm settings in percent/ft obscuration of the ILI and ILP detectors
- Change the application of an ASD device

### Control: Reset

Use Control Reset to initiate a System reset at any time.

Select **Reset** and press **ENTER** to reset the System and display the following message:

```
System Reset
```

If the System is normal, when Reset is selected, the System displays the following:

```
System Already Normal
```

### Control: Senstvty

Use Control Senstvty to change the sensitivity settings of smoke detectors on analog (ALD-2I or XLD-1) loops.

Select **Senstvty.** The System asks you for a module and device number:

```
Type In Module & Device:   -
```

Type the three-digit module number and three-digit device number using the numeric keypad and press **ENTER**.

**NOTE:** XLD-1 modules have *four* sequential module numbers—one for each analog loop. ALD-2I modules have *two* sequential module numbers —one for each loop.



Technical Manuals Online! - http://www.tech-man.com

The System displays the following four sensitivity settings for XLD-1 devices:

```
Hi_2  Hi_1  Norm  Lo_1
```

or

The System displays the following seven sensitivity settings for ALD-2I devices:

```
Hi_3 Hi_2 Hi_1 Norm Lo_1 Lo_2 Lo_3
```

Select the level you wish to set for the smoke detector specified and press **ENTER.** The System makes the change in the sensitivity setting.

Press **NEXT** to move through the devices until you display the ones you want to change. Follow the instructions above for making the changes.

When the System has displayed the highest numbered device for the module specified, it returns to the Control menu. To change the sensitivity settings at another module address, select **Senstvty** and follow the previous instructions.

If you attempt to change the sensitivity setting of another type of device, the System displays:

```
Not a Smoke Detector
```

If you enter any address for which there is no device assigned, the System displays:

```
No Device Assigned
```

To leave the Sensitivity menu without going through the entire list, press the Up arrow key. The System displays the Control menu.

**Control: Arm/dis**

Use Control Arm/dis to enable or disable the operation of an initiating device.

Select **Arm/dis.** The System asks you for the module number and device number of the device you wish to arm or disarm:

```
Type In Module & Device:   -
```

Type the three-digit module number and three-digit device number using the numeric keypad and press **ENTER**.

The System offers you a choice of arming or disarming the device:

```
Arm   Disarm
```

Highlight your choice and press **ENTER.** The System makes the change. When you disarm an input device, the System automatically annunciates the disarming as a **Trouble** and lights the PARTIAL SYSTEM DISABLE LED.

Press **NEXT** to move through the devices until you display the ones you want to change. Follow the previous instructions for making the changes.

When the System has displayed the highest numbered device for the module specified, it returns to the Control menu. To arm or disarm another module device, select **Arm/dis** and follow the previous instructions.

**Control: Output_on/off**

Use Control Output_on/off to arm or disarm the operation of an output device. In addition, you can energize (turn on) or de-energize (turn off) disarmed output devices.



Technical Manuals Online! - http://www.tech-man.com

Select **Output_on/off.** The System asks you for the module and device number of the device you wish to energize or de-energize:

```
Type In Module & Device:   -
```

Type the three-digit module number and three-digit device number using the numeric keypad and press **ENTER**.

The System offers you a choice of arming or disarming the device:

```
Arm   Disarm
```

Highlight your choice and press **ENTER.** If you have armed the device, you can press **NEXT** to display the number of the next device in the sequence. You can also press the Up arrow (⮝) key to return to the Control menu.

**NOTE:** You must first disarm a device if you wish to energize or de-energize it. When you disarm an output device, the System automatically annunciates the disarming as a **Trouble** and lights the PARTIAL SYSTEM DISABLE LED.

If you choose to disarm an output device, the System then asks if you wish to energize it or de-energize it:

```
253-005 Energize De_energize
```

Highlight your choice and press **ENTER.** Press **NEXT** to move through the outputs until you display the ones you want to change. Follow the instructions above for making the change.

When the System has displayed the highest numbered device for the module specified, it returns to the Control menu. To arm or disarm and energize or de-energize a device on a different module, select **Output_on/off** and follow the previous instructions.

### Control: Loop_arm

Use Control Loop_arm to enable the operation of a loop of ALD or XLD initiating devices.

Select **Loop_arm.** The System asks you for the module number of the ALD or XLD loop you wish to arm:

```
Type In Module:
```

Type the three-digit module number using the numeric keypad and press **ENTER.**

The System makes the change. When you arm input devices, the System automatically annunciates the arming as a **Trouble OUT,** and lights the PARTIAL SYSTEM DISABLE LED.

### Control: Loop_disarm

Use Control Loop_disarm to disable the operation of a loop of ALD or XLD initiating devices.

Select **Loop_disarm.** The System asks you for the module number of the ALD or XLD loop you wish to disarm:

```
Type In Module:
```

Type the three-digit module number using the numeric keypad and press **ENTER.**

The System makes the change. When you disarm input devices, the System automatically annunciates the disarming as a **Trouble IN,** and lights the PARTIAL SYSTEM DISABLE LED.



Technical Manuals Online! - http://www.tech-man.com

**Control: Net_link_Request**
Use Control Net_link_Request to send a request to the NCC to disconnect the MXL from the network.

Select **Net_link_Request.** The System displays the following:

```
Net_link_Request
```

Press **ENTER** to send the request to the NCC. When the operator at the NCC disconnects the node, the local annunciator will be in control.

**Control: Percent/ft**
Use Control Percent/ft to change sensitivity and pre-alarm settings in percent/ft obscuration of the ILI and ILP series of detectors.

Select **Percent/ft.** The System asks you for a module number and device number.

```
Type In Module & Device:   -
```

Type the three-digit module number and three-digit device number using the numeric keypad and press **ENTER.** The System displays the following:

```
001-001 Senstvty Pre-alarm
```

**Control: Percent/ft - Senstvty**
The display for Sensitivity supplies the current sensitivity as read back from the detector and is similar to the following (readings are dynamic):

```
002-003 Sens 1.4%/ft   Norm
```

In the previous message, **002-003** is the address. **Sens** is the type of response (Sensitivity or Pre-alarm). **1.4%/ft** is the smoke detector reading in %/ft obscuration and **Norm** is the text sensitivity range corresponding to the %/ft readings.

Use the left and right arrow keys on the keypad to lower or raise the %/ft reading. (Refer to the Sensitivity and Pre-Alarm Settings chart.)

After you change the sensitivity setting, the System prints the information for the selected device in a format similar to the following:

```
CMD Change Sens    06:38:20 Jun 2, 20xx
   001-001  HI_3
```

**List: Percent/ft - Pre-alarm**
The display for Pre-alarm supplies the current pre-alarm setting read back from the detector and is similar to the following (readings are dynamic):

```
002-003 Pre-alarm .75%/ft   Norm
```

In the previous message, **002-003** is the address. **Pre-alarm** is the type of response (Sensitivity or Pre-alarm). **.75%/ft** is the smoke detector reading in %/ft obscuration and **Norm** is the text sensitivity range corresponding to the %/ft readings.

Use the right (➢) or left (⮜) arrow keys on the keypad to lower or raise the %/ft reading. (Refer to the Sensitivity and Pre-Alarm Settings chart.)

After you change the pre-alarm setting, the System prints the information for the selected device in a format similar to the following:

```
CMD Change Pre-alm 06:38:20 Jun 2, 20xx
    002-004  1.4%/ft  Norm
```


Technical Manuals Online! - http://www.tech-man.com

**SENSITIVITY AND PRE-ALARM SETTINGS**

| Sensitivity | | |
|---|---|---|
| | Photo | Ion |
| Adjustment Increment | ~.25%/ft. | ~.12%/ft. |
| Range | 1.25-3.4%/ft. | .6-1.6%/ft. |
| Default (Norm) | 3.0%/ft. | 1.4%/ft. |
| **Pre-Alarm** | | |
| | Photo | Ion |
| Adjustment Increment | .25%/ft. | .12%/ft. |
| Range | .25-2.0%/ft. | .25-.75%/ft. |
| Default | 1.5%/ft. | .75%/ft. |

**NOTE:** Because the pre-alarm and sensitivity settings overlap, set the pre-alarm to at least an increment below the sensitivity setting.

**Control: Change_Apps**

Use Control Change_Apps to change the application of an ASD device. (Refer to **Appendix I - Application Specific Detection**.)

Select **Change_Apps.** The System asks you for a module number and device number.

```
Type In Module & Device:  -
```

Type the three-digit module number and three-digit device number using the numeric keypad and press **ENTER**.

Use the arrow keys to cycle through the supported applications listed below:

- OFFC - Office (Retail)
- WHSE - Warehouse (Light Manufacturing)
- LOBY - Lobby
- COMP - Computer Room
- DORM - Dormitory
- HLTH - Healthcare
- PARK - Parking Garage
- UTIL - Utility (Transformer Room)
- PREC - Precious Storage (Sensitive Environment)
- HOST - Hostile Environment
- DUCT - Duct (Open Air or Duct Housing)
- NONE

Press **ENTER** to select the desired application.

As a confirmation, the transaction and the time it occurs prints in a format similar to the following:

```
Command Change_Apps  09:41:32  Aug 07, 20xx
001-001   NONE -> OFFC
```

To leave the Change_Apps menu at any time, press the Up (⮝) arrow key. The System displays the Control menu.

**NOTE:** If the ASD application is changed while Test ASD is on, the changes will not be effective until Test ASD is turned off.

## The Test Menu

The Test menu has nineteen items from which to choose. You must enter your 1-5 digit password before you can use the Test functions.



Technical Manuals Online! - http://www.tech-man.com

Use the Test menu to:

- Change the time and date in the System
- Test ground fault state
- Display the System's power condition
- Test the LEDs or the display on the MKB
- Test the LEDs on an analog device
- Perform a lamp test on MOD-16 of MOI
- Test the PAX (or SAX) outputs of an XLD-1
- Test the LEDs on the ACM-1
- Display network performance characteristics
- Verify/confirm alarm override
- Manually indicate that an IEC detector has been cleaned
- Turn on, turn off, erase or display the event (History) log
- Test pre-alarm logic
- Test ASD detectors
- Record one summarized trouble for an entire module
- Perform testing on input points and simulate alarms

**Test: Set_time**

Use Test Set_time to set the time and date for the System.

Select **Set_time** and press **ENTER.** The System shows you the current System time, using a 24-hour clock,and the date:

```
Set Time=12:34:56 12/2/20xx
```

Type the time and date, using the numeric keypad, in the following format:
*hour:minute:second_month/day/year*

Press **ENTER** to set the time and date. The System prints the current time and date on the printer and returns you to the Test menu.

**Test: Gnd_flt**

Use Test Gnd_flt to test the present condition of the ground fault detection circuitry.

Select **Gnd_flt** and press **ENTER.** The System displays the following:

```
Gnd_flt: Main Remote
```

**Test: Gnd_flt - Main**

To have the System dynamically test for a ground fault and report the results of the test on the display *(OK, PLUS, or MINUS)*, select **Main.** The System displays:

```
Ground Fault is [OK/PLUS/MINUS]
```

If the message is other than *OK,* locate the circuit that is producing the ground fault. The display automatically changes to *OK* when the ground fault problem is corrected. (During this test, the System and its devices remain operational.)

**Test: Gnd_flt - Remote**

To test for a ground fault at a remote panel, select **Remote.** The System displays the following:

```
Type In Module:
```



Technical Manuals Online! - http://www.tech-man.com

Enter the three-digit network address of the PSR-1 module you wish to test and press **ENTER.** The display shows the following information from the PSR-1:

```
007: Gnd_flt Reference= 10.9 Volts
```

(If no PSR-1 exists for the address entered, the message *Not A PSR-1* appears.)

**Test: Power**

Use Test Power to test the System's battery voltage, AC voltage, and battery charge current. Also use it to test the Remote Power Supply's battery voltage, DC output, AC voltage, battery charge current, and DC output current.

Select **Power.** The System displays the following:

```
Power: Main Remote
```

**Test: Power - Main**

To display the AC Voltage, Battery Voltage, and Charging Current of the Main System, select **Main.** The System displays the following menu:

```
Main: Voltage Current
```

**Test: Power - Main - Voltage**

Select **Voltage** by pressing **ENTER** to display the battery voltage:

```
Battery Voltage = 26.5 Volts
```

Press **NEXT** to display the AC voltage:

```
AC Voltage = 110 VOLTS
```

**Test: Power - Main - Current**

Select **Current**. The System shows the battery charge current in amps:

```
Batt Chg Cur = 1.5 Amps
```

Press the Up arrow (⮝) key twice to return to the Power menu.

**To print the AC Voltage, Battery Voltage, and Charging Current of the Main System,** press **PRINT** when the **M** in **Main** is blinking. The System will print information in a format similar to the following:

```
Power Supply Statistics at 11:23:52 May 01, 20xx:
Battery Voltage = 12.1 volts Charging Cur. = 1.5 amps.
AC Voltage = 113 volts
```

**Test: Power - Remote**

To display the Battery Voltage, DC Output, AC Voltage, Battery Charge Current, and DC Output Current of the Remote Power Supply (PSR-1), select **Remote.** The System displays the following:

```
Type In Module:
```

Enter the three-digit network address of the PSR-1 module you wish to test and press **ENTER.** The display shows the following information from the PSR-1:

```
Remote: Voltage Current Options
```

(If no PSR-1 exists for the address entered, the message *Not A PSR-1* appears.)

**Test: Power - Remote - Voltage**

Select **Voltage** by pressing **ENTER** to display the battery voltage:

```
007: Batt Voltage = 27.2 Volts
```



Technical Manuals Online! - http://www.tech-man.com

Press **NEXT** to display the DC output voltage:

```
007: DC Output = 26.5 Volts
```

Press **NEXT** to display the AC voltage:

```
007: AC Voltage = 120.1 Volts
```

Press **NEXT** again to exit the Voltage submenu.

**Test: Power - Remote - Current**

Select **Current.** The System shows the battery charging current in amps:

```
007: Batt Chg Cur = 0.0 Amps
```

Press **NEXT** to display the DC output current:

```
007: DC Output Cur = 0.1 Amps
```

Press **NEXT** again to exit the Current submenu.

**Test: Power - Remote - Options**

Select **Options.** The System shows the first option field, transformer size:

```
007: Transformer Size = 6 Amps
```

Press **Next** to display the next option field, maximum battery charge:

```
007: Max Batt Chg = 3.0 Amps
```

Press **NEXT** to display the next option field, tamper switch:

```
007: Tamper Enabled
```

Press **NEXT** again to exit the Options submenu.

**To print the PSR-1 voltages, currents, and options,** press the **PRINT** key when the when the **R** in **Remote** is blinking. The System will print information in a format similar to the following:

```
Power Supply Statistics for PSR-1 7
at 10:49:37 Feb. 25, 20xx:

Batt Voltage < 27.2 volts Batt Chg Cur = 0.0 amps

DC Output = 26.5 volts DC Output Cur = 0.1 amps

Gnd Fault Reference = 11.4 volts

AC Voltage = 120.1 volts

Options selected: Transformer size = 6 amps

Max Batt Chg = 2.0 amps

Tamper Disabled
```

**Test: MKB1_Lamptest**

Use Test MKB1_Lamptest to test the LEDs and the alphanumeric display on the MKB.

Select **MKB1_Lamptest** and press **ENTER**. The System displays the following menu:

```
Lamp_Test: LEDs Display
```

**Test: MKB1_Lamptest - LEDs**

Select **LEDs** and press **ENTER** to test the LEDs and the audible on the MKB. The LEDs light for 5 seconds and then return to their previous state.

**Test: MKB1_Lamptest - Display**

Select **Display** and press **ENTER** to test the alphanumeric display. The System tests the display and then returns to the MKB1_Lamptest menu.



Technical Manuals Online! - http://www.tech-man.com

**Test: Device_LED**
Use Test Device_LED to test the LEDs on the System's analog devices.

Select **Device_LED** and press **ENTER**. The System asks you for a module number and device number.

```
Type In Module & Device:  -
```

Type the three-digit module number and three-digit device number using the numeric keypad and press **ENTER**.

The System displays the following menu for the device :

```
001-001 On  Off
```

To turn on the LED for that device, select **On** and press **ENTER.** The System turns on the LED for that device. Turning on a device LED automatically causes a Trouble to be annunicated.

Use the **NEXT** key to move through the devices until you display the ones whose LEDs you wish to test. Follow the previous instructions to turn on the LED for each device.

When the System has displayed the highest numbered device for the module specified, it returns to the Test menu.

To turn on a device LED for a different module, select **Device_LED** from the Test menu and follow the previous instructions.

**Test: MOI_Lamp_Test**
Use MOI_Lamp_Test to test the MOD-16 outputs of an MOI.

Select **MOI_Lamp_Test** and press **ENTER**. The System asks you for a module number.

```
Type In Module:
```

Type the three-digit module number using the numeric keypad and press **ENTER**.

If the MOI module is present in CSG-M, the MOD-16 outputs will be placed in a 30 second lamp test mode. After 30 seconds, these outputs return to their previous state.

**Test: PAX_Lamptest**
Use PAX_Lamptest to test the PAX (or SAX) outputs of an XLD-1.

Select **PAX_Lamptest** and press **ENTER**. The System then asks for a module number.

```
Type in Module Number:
```

Type the three-digit module number and press **ENTER**.

If the PAX (or SAX) is present on the XLD-1 module address specified, it is placed in lamp test. The lamp test for a PAX (or SAX) performs a sequential block-by-block test of all the outputs. After the test, the outputs return to their previous state.

**Test: ACM_Lamptest**
Use Test ACM_Lamptest to test the LEDs on the VSM-1, VLM-1, and VFM-1.

Select **ACM_Lamptest** and press **ENTER**. The System displays the following:

```
Type In Module:
```



Technical Manuals Online! - http://www.tech-man.com

Enter the three-digit network address of the ACM-1 module you wish to test and press **ENTER**.

The System tests all the LEDs on the VSM-1, VLM-1, and VFM-1 in sequence —red, green and yellow.

**Test: X_Network**
Use Test X_Network to display a series of statistics typically used by Siemens Building Technologies, Inc. to observe network communications.

**Test: M_Network**
Use Test M_Network to display a series of statistics typically used by Siemens Building Technologies, Inc. to observe network communications.

**Test: NET7_Diags**
Use Test NET7_Diags if a Loop A or Loop B Trouble is posted, to display which NET-7 module has reported the trouble.

Select **NET7_Diags** and press **ENTER**. The System displays the following menu:

```
Current   History
```

Select either **Current** or **History** to display the NET-7 module(s) reporting the trouble.

**Test: Override**
Use Test Override to override the CSG-M selected options for Alarm Verification and Alarm Confirmation.

Select Override and press **ENTER**. The System displays the following submenu:

```
Alr_Verify    Alr_Confirm
```

**Test: Override - Alr_Verify**
Select **Alr_Verify** and press **ENTER**. The System shows the following submenu:

```
Override: Yes  No
```

A blinking **Y** in **Yes** indicates that Alarm Verification Override is currently enabled. A blinking **N** in **No** indicates that the Alarm Verification Override is currently disabled.

**To enable Alarm Verification Override,** use the right (➢) or left (⮜) arrow keys to cause the **Y** in **YES** to start blinking. Pressing **ENTER** when the **Y** in **YES** is blinking will cause Alarm Verification Override to be enabled. The System will display the following message:

```
Override Enabled
```

**To disable Alarm Verification Override**, use the right (➢) or left (⮜) arrow keys to cause the **N** in **NO** to start blinking. Pressing **ENTER** when the **N** in **NO** is blinking will cause Alarm Verification Override to be disabled. The System will display the following message:

```
Override Disabled
```

In either case, if the Alarm Verification option was not selected in CSG-M, the System will display the following message:

```
Feature Not Enabled In CSG
```


Technical Manuals Online! - http://www.tech-man.com

**Test: Override - Alr_Confirm**
Select **Alr_Confirm** and press **ENTER**. The System shows the following menu:

```
Override: Yes  No
```

A blinking **Y** in **YES** indicates that Alarm Confirmation Override is enabled. A blinking **N** in **NO** indicates that the Alarm Confirmation Override is disabled.

**To enable Alarm Confirmation Override**, use the right (➢) or left (⮜) arrow keys to cause the **Y** in **YES** to start blinking. Pressing **ENTER** when the **Y** in **YES** is blinking enables Alarm Confirmation Override. The System will display the following message:

```
Override Enabled
```

**To disable Alarm Confirmation Override**, use the right (➢) or left (⮜) arrow keys to cause the **N** in **NO** to start blinking. Pressing **ENTER** when the **N** in **NO** is blinking disables Alarm Confirmation Override. The System will display the following message:

```
Override Disabled
```

In either case, if the Alarm Confirmation option was not selected in CSG-M, the System will display the following message:

```
Feature Not Enabled In CSG
```

**Test: Det_cleaned**
Use Test Det_cleaned to indicate that a selected detector has been cleaned. This option is only operational if IEC is enabled in the CSG-M.

Select **Det_cleaned** and press **ENTER**. The System asks you for a module number and device number.

```
Type In Module & Device:  -
```

Type the three-digit module number and three-digit device number using the numeric keypad and press **ENTER**. After entering the address, the MXL determines if the device is subject to IEC. If the device is not subject to IEC or if IEC is not enabled for the System, error messages display:

```
Device not subject to IEC
```

or

```
IEC not enabled in CSGM
```

If the device is an IEC detector, the MXL will display and print the time, date, module-device and custom message of the cleaned device.

**Test: Event_Log**
Use Test Event_Log to display a series of history information about the System. The System can display one or many event types as listed, depending upon the configuration in the CSG-M:

**HISTORY EVENT TYPES**

| | |
|---|---|
| Alarms* | Audible Control* |
| Troubles* | Set Sensitivity |
| Supervisories* | Auto Set Sensitivity |
| Securities* | Arm/Disarm* |
| Status Changes | Energize/De-energize* |
| Device Verification | Set Time* |
| Output Activations | Password* |
| Reset* | Override |
| Block Acknowledge* | |

* These items are set as default event types when the logging option is first selected. At least one event type must be selected.



Technical Manuals Online! - http://www.tech-man.com

The MXL has two mutually exclusive ways to log events:

**1. Small List Logging**

In the small list logging mode, the MXL stores up to 818 events in non-volatile memory. Non-volatile memory is memory that is not lost when the power is removed.

When the event storage area becomes 80% full, a system trouble begins. This trouble operates like any other trouble in the System—the trouble audible sounds, the trouble indicator lights, and the following message shows on the LCD display:

```
Event Log 80% full
```

When the event storage area becomes 90% full, a new system trouble begins. This trouble operates like any other trouble in the System—the trouble audible sounds, the trouble indicator lights, and the following message shows on the LCD display:

```
Event Log 90% full
```

When the event log is full, a new system trouble begins. This trouble operates like any other trouble in the System—the trouble audible sounds, the trouble indicator lights, and the following message shows on the LCD display:

```
Log FULL, Events will be lost
```

Upon reset this trouble reappears. While the log is full, **all new events are not recorded to history**. This system encourages removing history information to an external data base before the log overflows.

**2. Circular Logging**

In the circular logging mode, the MXL guarantees that the most current 500 events are stored in non-volatile memory. Once all available storage is used, the oldest history entries are replaced by newer ones. It is assumed that the end user selects this mode because he does not wish to maintain an external history database. Therefore, only two warning troubles are issued:

- When the number of recorded events reaches 80% of the total.
- When the number of recorded events reaches 90% of the total. (When this trouble is acknowledged, it disappears until 80% of events is reached in the next cycle.)

Using the circular logging mode does not prevent the storage of history information into an external database. However, there is a high probability of losing old events because of the limited warnings given when events are about to be overwritten.

#### MKB Menu Option to Enable, Disable and Erase History

This option allows the user with the highest level password to turn on, turn off, or erase the History, provided that this system option has been enabled in the CSG-M and the History mode is other than NONE (that is, either small or circular).

#### Test: Event Log - Hist_Ctrl and Hist_Erase

From the **Test** menu, move the cursor to the right until it highlights the Event-



Technical Manuals Online! - http://www.tech-man.com

Log Menu item, and press **ENTER** to bring up the submenu for MXL History. Move the cursor within the submenu to either the left or right to highlight the **Hist_Ctrl** item to turn on/off the History, or **Hist_Erase** to erase History. Notice that if the CSG-M system option **Enable History Log Via MKB Menu** is set to NO, these submenus are not accessible.

History turned on or off using the MKB menus is unaffected through PANEL RESET, and defaults to the setting in CSG-M upon power-up.

Pressing ENTER while the cursor is on **Hist_Erase** displays the following message on the MKB asking for confirmation:

```
Enter to proceed, other key to abort
```

Pressing ENTER erases the History section in the flash no matter what state the History is currently in (manually turned on or off); pressing any other key aborts the action.

Manual manipulation of History using the MKB is logged in History as in the following examples:

History Manually Erased
History Manually Turned off
History Manually Turned on

**NOTES:**

1. The operator should download the history log for future reference before erasing the MXL's History, since once the history is erased it cannot be undeleted.
2. The history menu options do not alter the history mode selected in the CSG-M.

To use Test Event_Log select **Event_Log** and press **ENTER**. The System displays a filter menu.

**NOTE:** If the user makes a selection from the filter menu using the **ENTER** key, the output goes to the LCD display. If the selection is made using the **PRINT** key the output goes to the System printer. If the group of events selected is empty, the MXL displays or prints, as appropriate:

```
No History Items Found
```

**HISTORY FILTER OPTIONS**

| | |
|---|---|
| **Alarms** | Displays or prints incoming alarms, alarm acknowledgments, audible control, and resets. This set of events gives the operator a clear picture of the important events that constitute an alarm condition. |
| **Troubles** | Displays or prints troubles and resets. |
| **Supervisories** | Displays or prints supervisories and resets. |
| **Securities** | Displays or prints securities, device arms, device disarms, and resets. |
| **All** | Displays or prints all events. |

When the operator selects the LCD display mode, the System displays the first (and oldest) event in a format similar to the following:

```
mmm÷ddd  〖event type〗
nnn 〖time/date〗 〖modifier〗
```

In the previous message, **mmm** is the module number or function name, **÷** gives the operator a quick visual cue that the MXL is in the history display mode, **ddd** is the device number (if



Technical Manuals Online! - http://www.tech-man.com

**HISTORY EVENTS BY GROUP**

| Event Type | | Event Modifier | |
|---|---|---|---|
| **Group 1** | | | |
| **Ack Alarm** | Alarm block acknowledge | | No modifiers for this group. |
| **Ack Trbl** | Trouble block acknowledge | | |
| **Ack Sec** | Security block acknowledge | | |
| **Ack Sup** | Supervisory block acknowledge | | |
| **Man Rst** | Manual reset via MKB | | |
| **Cold Rst** | Hard reset from power off | | |
| **Warm Rst** | Hard reset via reset jumper | | |
| **Wdog Rst** | Hard reset via watchdog | | |
| **Verify** | Alarm verify | | |
| **Energize** | Energize an output | | |
| **De-Energize** | De-energize an output | | |
| **Arm** | Arm a device | | |
| **Dis-Arm** | Disarm a device | | |
| **Silence** | Silence audibles | | |
| **Unsilence** | Unsilence audibles | | |
| **Config** | (CSG-M) Configuration changed | | |
| **Group 2** | | | |
| **Alarm** | Alarm causing device event | | |
| **Trouble** | Trouble causing device event | **IN** | Condition now active |
| **Securty** | Security causing device event | **OUT** | Condition now inactive |
| **Supervs** | Supervisory causing device event | **ACK** | Condition now acknowledged |
| **Status** | Status causing device event | | |
| **Group 3** | | | |
| **Sens** | Sensitivity set | **Hi_3** | |
| | | **Hi_2** | |
| | | **Hi_1** | |
| | | **NORMAL** | |
| | | **Low_1** | |
| | | **Low_2** | |
| | | **Low_3** | |
| **Group 4** | | | |
| **Login** | Operator login | **0** | Lowest access |
| | | **1** | |
| | | **2** | |
| | | **3** | Highest access |
| **Group 5** | | | |
| **Output** | Output logic event | **ON** | Condition now active |
| | | **OFF** | Condition now inactive |



Technical Manuals Online! - http://www.tech-man.com

used), **event type** identifies the type of history event that is being reported, **nnn** is the history log sequence number, **time/date** is the time and date when the event was logged, and **modifier** is an optional field that extends the meaning of the event type.

The **NEXT** and **HOLD** keys are used to navigate through the log list. When the history log list first displays, the oldest history event shows in the display. Use the **NEXT** key to select the next newest event in the list and the **HOLD** key to select the next oldest event in the list. When either end of the history log list is reached, the System displays the following message:

```
End Of History List
```

Continuing to press either key wraps the list to the oldest or newest event, as appropriate.

To print the History Log, press **PRINT** when making a choice from the **Event_Log Filter** menu. The history printout format is the same as all other listing type reports.

To interrupt the listing operation at any time, press **CLEAR**. Significant System activities, such as alarms, troubles etc., automatically terminate listing. The printout always indicates when the listing has been prematurely terminated.

The System prints a history log in a format similar to the following:

```
[Listing Date]
[Listing Conditions]

[Event Type][Modifier] [Event Locator]
[Time/Date][nnn] [Event Description]
```

In the previous sample, **Listing Date** identifies the report type (in this case the history log) and the date the report was generated, **Listing Condition** shows the filter and starting date for this report, **Event Type** identifies the type of history event that is being reported, **Modifier** is an optional field that extends the meaning of the event type, **Event Locator** locates the source or destination of the event as either a module number, module-device pair, or function name, **Time/Date** is the time and date when the event was logged, **nnn** is the history log sequence number, and **Event Description** is either the custom message associated with a device, or for non-devices, it is a descriptive message.

#### Test: Pyro_Diags

Use Test Pyro_Diags to display a series of statistics typically used by Siemens Building Technologies, Inc. to evaluate the operation of the System. A special password is required for access to this function.

#### Test: Pre_alarm

Use Test Pre_alarm to test pre-alarm logic.

Select **Pre_alarm.** The System asks you for a module number and device number.

```
Type In Module & Device:  -
```

Type the three-digit module number and three-digit device number using the numeric keypad and press **ENTER**.



Technical Manuals Online! - http://www.tech-man.com

The System then sends information to force this detector into pre-alarm. Once it pre-alarms, or after a delay, the MXL then restores the detector to its proper pre-alarm setting.

**Test: ASD_Devices**

Use Test ASD_Devices to disable ASD parameters and allow timely response to test gas.

Select **ASD_Devices** and press **ENTER**. The System tests the ASD devices present in the System and displays the following:

```
Testing Of ASD Device Enabled
```

Press **ENTER** again and the System displays:

```
Testing Of ASD Device Disabled
```

Press **ENTER** to toggle between Testing Enabled (Trouble In) and Testing Disabled (Trouble Out). When toggling between Testing Enabled and Testing Disabled, there is a three minute time period that separates the two states.

Activating the ASD_Devices command will post a Trouble into the System which will be printed as:

```
TROUBLE IN 253 08:24:53 Aug 08, 20xx
#8- - - CERBERUS Pyrotronics---,
ASD Testing Enabled, MXL Panel
```

Pressing **ENTER** a second time will cause the following message to be printed out:

```
TROUBLE OUT 253 08:24:53 Aug 08, 20xx
#9- - - CERBERUS Pyrotronics---,
ASD Testing Disabled, MXL Panel
```

**NOTE:** If Test ASD_Devices is activated and left alone, the System will automatically disable the test (time out) after four hours. Test ASD_Devices is inhibited while the System is initializing or resetting.

**Test: Summarize**

Use Test Summarize to ignore known troubles, and instead view one summarized trouble for an entire module. This is typically used during installation and commissioning.

Select **Summarize** and press **ENTER**. The System displays the following menu:

```
Select_Mods  ON  OFF
```

**Test: Summarize - Select_Mods**

Use Test Summarize Select_Mods to scroll through all installed (CSG-M) module addresses and enable/disable the summarize feature for each module address. Choose **Select_Mods** and press **ENTER**. The System displays the following:

```
001  YES  NO
```

Press NEXT and the System displays:

```
002  YES  NO
```

The System flashes the currently active summarize selection for the module address. The operator may then press the right (➢) or left (⮜) arrow keys to highlight either YES or NO and then press the **ENTER** key to accept and program the selection. When **ENTER** is pressed, the System



Technical Manuals Online! - http://www.tech-man.com

scrolls to the next installed module address. The Up arrow (⮝) key terminates the Select_Mods mode.

All Select_Mods selections remain intact until the System is turned off, even if summarize mode is toggled.

- One trouble is posted per module address, regardless of how many troubles are detected at that module address.
- A trouble is not posted unless at least one trouble is detected at that module address.
- The trouble report is consistent with existing MXL trouble messages and the text reads *Troubles summarized*.
- The MXL only reports TRBL-INs when summary mode is enabled at an address.
- Alarm, supervisory, security, and status event reporting are not effected.

Modules which are NOT selected for summary report their troubles as usual, even if summary mode is turned on for other module addresses.

When a module address is summarized, individually occurring troubles are not broadcast to XNET; the single Troubles summarized trouble is broadcast to XNET. The Troubles summarized trouble is implemented as any other system trouble, being logged to history, taking up one of the 300 trouble slots, and appearing in List Troubles requests. All summarize selections are unaffected through RESET and default to CSG-M setting at power up.

**Test: Summarize - OFF**

When **Summarize OFF** is selected, the System annunciates the following trouble:

```
System Commissioning Mode TRBL OUT
```

and turns off the Partial System Disable LED. Preexisting *Troubles summarized* events remain and the System reverts to normal trouble reporting and processing for all new troubles.

**Test: Summarize - ON**

When **Summarize ON** is selected, the System annunciates the following trouble:

```
System Commissioning Mode TRBL IN
```

and turns on the Partial System Disable LED. The System displays one summarized trouble for the total system.

**Test: Manual_Activate**

Use Test Manual_Activate to:

- Perform testing on input points and the associated output logic expected when the point is activated.
- Generate alarms and associated output activations.

Select **Manual_Activate** and press **ENTER**. The System asks you for a module number and device number.

```
Type In Module & Device:  -
```

Type the three-digit module number and three-digit device number using the numeric keypad and press **ENTER**.



Technical Manuals Online! - http://www.tech-man.com

Upon entering the device address, the System performs as follows based on the point type:

**MANUAL INPUT POINT ACTIVATION**

| | |
|---|---|
| **No Input Point** | Error message. |
| **Analog Smoke Detectors** | System issues command to place device into the alarm state via sensitivity adjustment. Device then reports alarm as if an actual alarm occurred. Associated outputs follow. |
| **All Other Inputs** | System will not issue any command to device, but will synthesize the reporting of alarm in by the device. Associated outputs follow. |

**Test: Manual_Activate - Test**
This provides a remote switch that upon activation/deactivation of the TRI, the MXL reads the module-device address provided and performs the operations outlined above. This use is primarily for, but not limited to, testing intelligent duct detectors.

## The Walktest Menu

A Walktest of the MXL System enables a qualified technician to test the operation of input points on the MXL with or without disabling the entire fire alarm system. Testing can be silent or with audible feedback for:

- The entire System
- An ALD loop (60 subaddresses)
- An XLD-1 loop (30 subaddresses)
- A CZM-4 module (4 zones)
- A conventional zone (individual CZM-1B6 or CZM-4 zone)
- MOI (MID)
- AnaLaser zones

The Walktest menu has eight items from which to choose. You must enter your 1-5 digit password before you can use the Walktest functions.

**WARNING:** A device placed in Walktest is disconnected from its usual functions. Alarm causing devices in Walktest do NOT cause alarms until the MXL is out of the trouble of Walktest.

In both the silent (SIL) and audible (wAUD) Walktest modes, information is displayed on the Control Panel LCD and printed on the printer (if a printer is installed). The audible (wAUD) mode also provides audible feedback to the technician with the testing of each input device. Audible feedback is NOT included on circuits with zone coded audibles. A system with only zone coded audibles ALWAYS results in a silent Walktest.

**Suggested Walktest Procedure**
In order to reduce the chance of problems, the following procedure must be followed before performing the Walktest.

- Inform the person in charge of the MXL fire alarm system that a Walktest is to be performed and that part or all of the fire detection system will be disabled. It is also advisable (or may be required) to notify the fire department of the test.


Technical Manuals Online! - http://www.tech-man.com

- Use the MXL's LIST menu to obtain a printout of the device types and custom messages for ALL modules to be walktested.
- Review the list with the person in charge of the fire protection equipment to ensure that the custom messages provide adequate information for locating and testing the devices in question.
- Disable the ASD applications in the system using ASD_Device in the TEST menu prior to performing walktest. Once the test ASD device option has been enabled using the test menu, the tester should wait 3 minutes before attempting to test the ASD devices. This will ensure that the ASD R-Algorithm has been disabled for the test. When the test is complete, press ASD_Device again to re-enable ASD R-Algorithm, or it will automatically re-enable after 4 hours. System will not reset if these ASD devices are still in disabled state.
- Initiate Walktest. Test devices in a predetermined, orderly sequence.
- When the Walktest is complete (timed out/cancelled), acknowledge the OUT OF TROUBLE condition and reset the MXL. When the System indicates SYSTEM NORMAL, the test is complete.

**Walktest: System_wAUD / System_SIL**

Use Walktest System_wAUD or Walktest System_SIL to walktest all CZM-4 zones, CZM-1B6 zones, and ALD-2 inputs.

Select **System_wAUD** (for audible feedback) or **System_SIL** (for silence) and press **ENTER**. The PARTIAL SYSTEM DISABLE LED lights, the TROUBLE LED flashes, the internal audible sounds, and the Walktest activated trouble for the MXL appears on the trouble list. If a printer is installed, the trouble is also printed.

## WALKTEST MENU OPTIONS

| | Purpose |
|---|---|
| **System_wAUD*** | Walktest for all CZM-4 zones, CZM-1B6 zones, and ALD-2 inputs with audible feedback to the technician. |
| **Loop_wAUD**** | Walktest for input devices on a specific ALD-2 loop or on all four zones of a CZM-4 with audible feedback to the technician. |
| **Zone_wAUD***** | Walktest for an individual conventional zone (CZM-1B6 or CZM-4) with audible feedback to the technician. |
| **System_SIL*** | Walktest for all CZM-4 zones and ALD-2 inputs without audible feedback to the technician. |
| **Loop_SIL**** | Walktest for input devices on a specific ALD_2 loop or all four zones of a CZM-4 without audible feedback to the technician. |
| **Zone_SIL***** | Walktest for an individual conventional zone (CZM-1B6 or CZM-4) without audible feedback to the technician. |
| **Cancel** | Sets the timer at the *1 Minute Left in Walktest* mark. This allows the MXL to complete Walktest sequencing on devices placed in test (alarm) just before cancellation. The MXL completes the final 60 seconds of the Walktest. (See Walktest Ending Sequence.) |
| **Extend** | Resets the Walktest timer to the *4 Hours Remaining* mark. |

*This mode inhibits the MXL from annunciating real alarm conditions.

**This mode inhibits the MXL from annunciating real alarm conditions for the ALD-2 loop or CZM-4 conventional zones in Walktest.

***This mode inhibits the MXL from annunciating real alarm conditions for the conventional zone in Walktest.



Technical Manuals Online! - http://www.tech-man.com

The LCD display reads:

```
In Walktest. Normal operation
disabled.
ENTER to continue.
```

Press **ENTER** or wait 60 seconds and the display reads:

```
Walktest expires in 4 hrs unless
cancelled.
ENTER to continue.
```

Press **ENTER**, or wait 60 seconds and the MXL returns to the Walktest menu. (The MXL is in system Walktest.) The LCD indicates the time remaining in Walktest in the last five positions on the display. The time is indicated in HH:MM (hours:minutes) until less than one hour remains, then it is indicated in MM:SS (minutes:seconds).

Locate the device to be tested and place that device in alarm (or trouble). When the event is reported to the MXL, the following sequence occurs.

**When the System is in the audible Walktest mode**, all silenceable and non-silenceable audibles that are not already active or disarmed sound the code, depending on how the device is used in the CSG-M. (See the *Walktest Audible Codes* table.)

**WALKTEST AUDIBLE CODES**

| | |
|---|---|
| **ALARM** | 2 seconds on, then off |
| **SUPERVISORY** | 2 one-second pulses (on-off) |
| **TROUBLE** | 4 seconds on, then off |
| **SECURITY** | 4 one-second pulses (on-off) |
| **STATUS** | 6 seconds on, then off |

**When a printer is installed**, the printer prints a message similar to the following:

```
WLK [event type] IN/OUT device address
time/date device type, custom message,
trouble type (if applicable)
```

**The LCD displays** the following for eight seconds:

```
1-001 [custom msg] WLK IN/OUT
[event type]          device type
```

**If the ALD-2 device has an LED**, it turns on for 30 seconds to provide additional feedback to the technician.

If the MXL detects multiple events, they are automatically spaced 8-10 seconds apart to allow for separation of the coding. Up to five simultaneous events may be held in order for processing.

**When five minutes remain**, the System begins the Walktest ending sequence.

### Walktest: Loop_wAUD / Loop_SIL

Use Walktest Loop_wAUD or Walktest Loop_SIL to walktest input devices on a specific ALD-2 loop or on all four zones of a CZM-4.

Select **Loop_wAUD** (for audible feedback) or **Loop_SIL** (for silence) and press **ENTER**. The System then asks for the module number of the module you wish to test.

```
Type In Module Number:
```

Type the three-digit module number and press **ENTER**.



Technical Manuals Online! - http://www.tech-man.com

**If the module number entered is not an ALD-2 or CZM-4,** the System displays the following for 2 seconds:

```
Invalid type for Walktest
```

The display then returns to the Walktest menu.

If the module type is an ALD-2 or CZM-4 in the CSG-M, the PARTIAL SYSTEM DISABLE LED lights, the TROUBLE LED flashes, the internal audible sounds, and the Walktest activated trouble for the module appears on the trouble list. If a printer is installed, the trouble is also printed.

The LCD display reads:

```
In Walktest. Normal operation disabled.
ENTER to continue.
```

Press **ENTER** or wait 60 seconds and the display reads:

```
Walktest expires in 4 hrs
unless cancelled.
ENTER to continue.
```

Press **ENTER**, or wait 60 seconds and the MXL returns to the Walktest menu. (The MXL is in system Walktest.) The LCD indicates the time remaining in Walktest in the last five positions on the display. The time is indicated in HH:MM (hours:minutes) until less than one hour remains, then it is indicated in MM:SS (minutes:seconds).

Locate the device to be tested and place that device in alarm (or trouble). When the event is reported to the MXL, the following sequence occurs:

**When the System is in the audible Walktest mode**, all silenceable and non-silenceable audibles that are not already active or disarmed sound the code, depending on how the device is used in the CSG-M. (See the *Walktest Audible Codes* table.)

**WALKTEST AUDIBLE CODES**

| | |
|---|---|
| **ALARM** | 2 seconds on, then off |
| **SUPERVISORY** | 2 one-second pulses (on-off) |
| **TROUBLE** | 4 seconds on, then off |
| **SECURITY** | 4 one-second pulses (on-off) |
| **STATUS** | 6 seconds on, then off |

**When a printer is installed**, the printer prints a message similar to the following:

```
WLK [event type] IN/OUT device ad-
dress time/date device type, custom
message, trouble type (if applicable)
```

**The LCD displays** the following for eight seconds:

```
1-001 [custom msg] WLK IN/OUT
[event type]          device type
```

**If the ALD-2 device has an LED**, it turns on for 30 seconds to provide additional feedback to the technician.

If the MXL detects multiple events, they are automatically spaced 8-10 seconds apart to allow for separation of the coding. Up to five simultaneous events may be held in order for processing.

**When five minutes remain**, the System begins the Walktest ending sequence.



Technical Manuals Online! - http://www.tech-man.com

**NOTE:** If an alarm or supervisory is reported from a device that is NOT in Walktest, the Walktest is suspended immediately. No further Walktest events are annunciated or coded. The Walktest remains running in the background of the MXL until it times out or is canceled.

**WARNING:** When performing a partial system Walktest, **DO NOT TEST any devices that are not in the Walktest**, as this will cause an alarm in the System.

### Walktest: Zone_wAUD / Zone_SIL

Use Walktest Zone_wAUD or Walktest Zone_SIL to walktest an individual conventional zone (CZM-1B6 or CZM-4).

Select **Zone_wAUD** (for audible feedback) or **Zone_SIL** (for silence) and press **ENTER.** The System asks you for the module and device number of the device you wish to test:

```
Type In Module & Device:  -
```

Type the three-digit module number and three-digit device number using the numeric keypad and press **ENTER**.

**If the address number entered is not a CZM-1B6 or CZM-4 zone,** the System displays the following for 2 seconds:

```
Invalid type for Walktest
```

The display then returns to the Walktest menu.

If the module type is an CZM-1B6 or CZM-4 zone in the CSG-M, the PARTIAL SYSTEM DISABLE LED lights, the TROUBLE LED flashes, the internal audible sounds, and the Walktest activated trouble for the zone appears on the trouble list. If a printer is installed, the trouble is also printed.

The LCD display reads:

```
In Walktest. Normal operation
disabled.
ENTER to continue.
```

Press **ENTER** or wait 60 seconds and the display reads:

```
Walktest expires in 4 hrs
unless cancelled.
ENTER to continue.
```

Press **ENTER**, or wait 60 seconds and the MXL returns to the Walktest menu. (The MXL is in system Walktest.) The LCD indicates the time remaining in Walktest in the last five positions on the display. The time is indicated in HH:MM (hours:minutes) until less than one hour remains, then it is indicated in MM:SS (minutes: seconds).

Locate the device to be tested and place that device in alarm (or trouble). When the event is reported to the MXL, the following sequence occurs:

**When the System is in the audible Walktest mode**, all silenceable and non-silenceable audibles that are not already active or disarmed sound the code, depending on how the device is used in the CSG-M. (See the *Walktest Audible Codes* table.)

**WALKTEST AUDIBLE CODES**

| | |
|---|---|
| **ALARM** | 2 seconds on, then off |
| **SUPERVISORY** | 2 one-second pulses (on-off) |
| **TROUBLE** | 4 seconds on, then off |
| **SECURITY** | 4 one-second pulses (on-off) |
| **STATUS** | 6 seconds on, then off |



Technical Manuals Online! - http://www.tech-man.com

**When a printer is installed**, the printer prints a message similar to the following:

```
WLK [event type] IN/OUT device ad-
dress time/date device type, custom
message, trouble type (if applicable)
```

**The LCD displays** the following for eight seconds:

```
1-001 [custom msg] WLK IN/OUT
[event type]          device type
```

**If the ALD device has an LED,** it turns on for 30 seconds to provide additional feedback to the technician.

If the MXL detects multiple events, they are automatically spaced 8-10 seconds apart to allow for separation of the coding. Up to five simultaneous events may be held in order for processing.

**When five minutes remain**, the System begins the Walktest ending sequence.

**NOTE:** If an alarm or supervisory is reported from a device that is NOT in Walktest, the Walktest is suspended immediately. No further Walktest events are annunciated or coded. The Walktest remains running in the background of the MXL until it times out or is canceled.

**WARNING:** When performing a partial system Walktest, **DO NOT TEST any devices that are not in the Walktest,** as this will cause an alarm in the system.

### Walktest Ending Sequence

**When 5 minutes remain** in Walktest, all silenceable and non-silenceable audibles that are not already active or disarmed cycle on-off five times (1 second on) to indicate that the Walktest will time out in 5 minutes. This occurs in both the silent and audible modes.

**When 1 minute remains**, event coding and the processing of devices to the LCD are suspended. If a device is alarmed, it is cycled silently through the resetting sequence.

**When 45 seconds remain**, all silenceable and non-silenceable audibles that are not already active or disarmed cycle on-off until Walktest times out. Do NOT continue to walktest devices. This 45 second period of no new Walktest events ensures that all devices are reset when the Walktest timer expires and the System returns to normal operation. Alarming a device during this period might result in the reporting of erroneous events when the System returns to normal operation.



Technical Manuals Online! - http://www.tech-man.com

Technical Manuals Online! - http://www.tech-man.com

# Connections and Ratings

# ACM-1 Connections and Ratings

**Electrical ratings:**
24VDC, 85mA

5VDC, 176mA

**Electrical connections:**
The ACM-1 can be wired in two configurations:

1. Where an MMB-1/-2 (or PSR-1) supplies the power and data communications.
2. Where a PS-5N7 supplies the power and data communications, as in a remote expander board.

The wiring information below is unaffected by whether the ACM-1 module is in the upper or lower position of the enclosure.

**CAUTION:**
Remember that all cables that connect to the ACM-1 are polarized and connect in one way only. DO NOT FORCE THEM. The location of pin 1 on a connector is indicated by marks on the pin or by color tracers on the wires. In Nos.1 and 2 below, be sure the black tracer wire is close to the "1."

**1. To wire the ACM-1 in an enclosure that has an MMB or a PSR.**

- Connect the long 15-conductor ribbon cable (P/N 555-192238) from the MMB-1/-2, P8 (or PSR-1, P5) to P5 on the ACM-1.
- Connect the short 15-conductor ribbon cable (P/N 555-192242) from the ANN-1, P1 to P4 on the ACM-1.
- Connect the 14-conductor ribbon cable (P/N 555-192236) from the TMM-1, P3 to P1 on the ACM-1, if used.
- Connect the 50-conductor ribbon cable (P/N 555-192201) from the TBM-1/-2, P3 to P2 on the ACM-1.
- Connect the 5-conductor wire cable (P/N 600-190220) from the TBM-1/-2, P2 to P3 on the ACM-1.
- P6 on the ACM-1 is connected to an optional BTC-1 module, if used.
- If an MMM-1 is used, connect the 9- conductor cable attached to the MMM-1 to P7 on the ACM-1.

**2. To wire an ACM-1 module when a PS-5N7 is used to supply power and for data communication (instead of an MMB or a PSR):**

- Connect the long 15-conductor ribbon cable (P/N 555-192238) from the PS-5N7, P1 to P5 on the ACM-1.
- Connect the 50-conductor ribbon cable (P/N 555-192201) from the TBM-1/-2, P3 to P2 on the ACM-1.
- Connect the 5-conductor wire cable (P/N 600-190220) from the TBM-1/-2, P2 to P3 on the ACM-1.



Technical Manuals Online! - http://www.tech-man.com

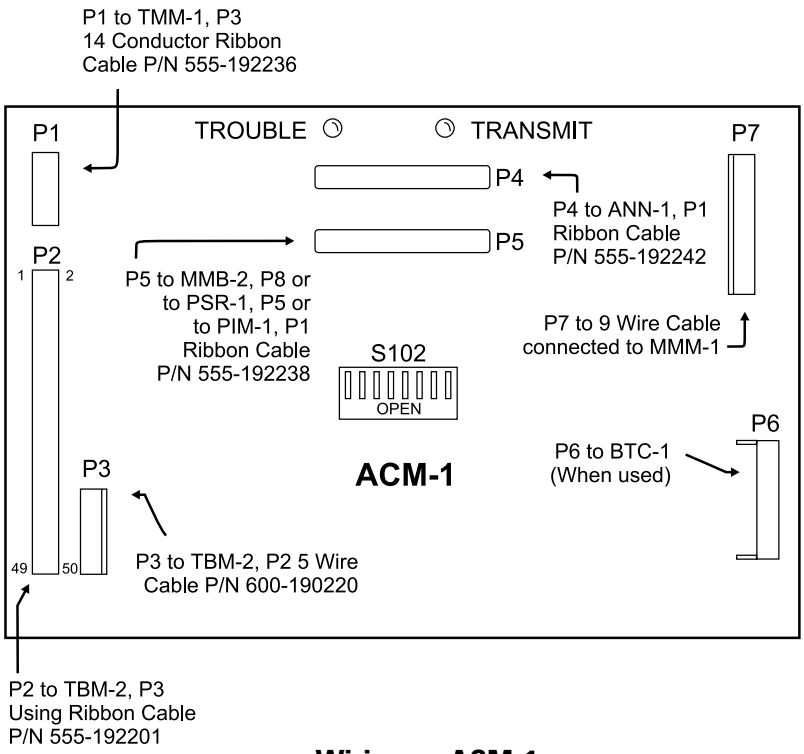


**Wiring an ACM-1**
**that is Mounted on an MKB-2**

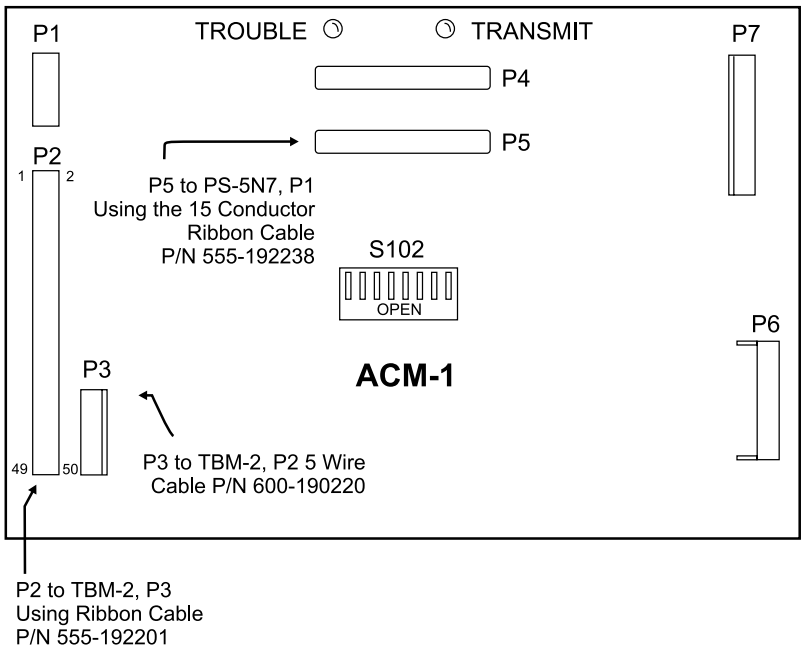


**Wiring an ACM-1**
**in a Remote Expander Enclosure**



Technical Manuals Online! - http://www.tech-man.com

# ALD-2I Connections and Ratings

**Electrical ratings:**

| | |
|---|---|
| Supervisory | 30 VDC peak<br>66mA max |
| Alarm | 30 VDC peak<br>66mA max<br>(60 devices in alarm) |

All wiring must be in accordance with Article 760 of NEC and the local building codes.

Only the devices listed in **Appendix A, Table 2 - Analog Addressable Detectors** on page A-1 may be used. The UL identifiers for compatibility are the same as the model names specified.

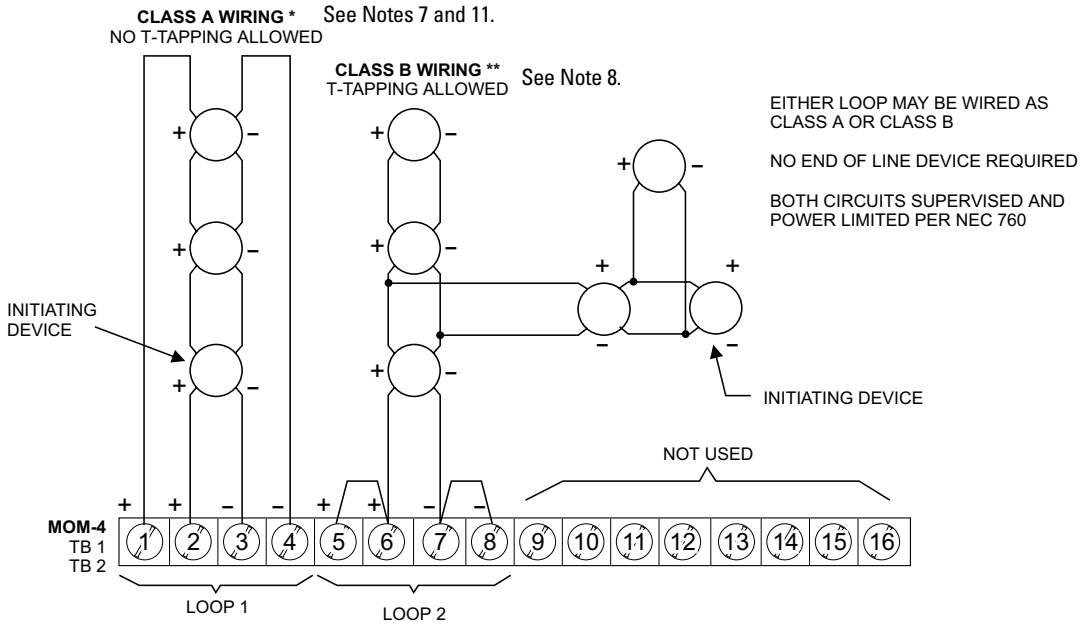


**ALD-2I Wiring**

NOTES

1. Power limited to NFPA 70 per NEC 760.
2. Minimum wire size: 18 AWG.
3. Maximum resistance: 100 ohms total.
4. Maximum capacitance: 0.4µF between + loop and – loop. 0.8µF between + loop and chassis. 0.8µF between – loop and chassis.
5. Each detector or group of detectors, requires a two-wire circuit of thermo-plastic fixture wire enclosed in conduit or limited energy shielded cable without conduit, if permitted by local building codes.
6. No end of line device required.
7. Operates in full conformance with Style 6.
8. Operates in full conformance with Style 4.
9. Either loop may be wired Class A or B.
10. 60 devices maximum per loop.
11. T-tapping is NOT allowed on Class A loops.
12. Both circuits are supervised.

Technical Manuals Online! - http://www.tech-man.com

# ASC-1 Connections and Ratings

**Electrical ratings:**
24VDC, 41mA
5VDC, 29mA

Use unshielded twisted pair for high level amplifier connections. Use shielded twisted pair for terminals 1 and 2. Use single conductor wire for other connections.

Maximum wire length:
Refer to the decibel (dB) loss chart in the tables below. The wire length includes the length of the wire from the amplifier to the ASC-1, from the ASC-1 to the ZC series of audio cards, and the wire length in the longest audio zone served by the amplifier.

High level outputs:
25.2V RMS, 4.0A, 100W max
70.7V RMS, 1.4A, 100W max

Backup amplifier input:
1V RMS max

All wiring must be in accordance with Article 760 of NEC or the local building codes.

**Electrical connections:**
Some signal is lost in the zone wires due to line resistance. Refer to the tables below to determine the decibel loss for various wire gauges and lengths. A reduction in load reduces the loss. Use the largest wire size possible for the smallest loss.

**SPEAKER ZONE DECIBEL LOSS for 25.2V RMS, 35W load**

| Length | Gauge | | |
|---|---|---|---|
| | 14 AWG | 16 AWG | 18 AWG |
| (feet) | (loss in decibels) | | |
| 200 | 0.2 | 0.3 | 0.6 |
| 400 | 0.5 | 0.7 | 1.1 |
| 600 | 0.7 | 1.1 | 1.6 |
| 800 | 0.9 | 1.5 | 2.2 |
| 1000 | 1.2 | 1.8 | 2.7 |

**SPEAKER ZONE DECIBEL LOSS for 70.7V RMS, 25W load**

| Length | Gauge | |
|---|---|---|
| | 16 AWG | 18 AWG |
| (feet) | (loss in decibels) | |
| 200 | 0.04 | 0.06 |
| 400 | 0.07 | 0.11 |
| 600 | 0.11 | 0.17 |
| 800 | 0.14 | 0.22 |
| 1000 | 0.18 | 0.27 |



Technical Manuals Online! - http://www.tech-man.com

NOTES

1. All wiring must be in accordance with Article 760 of NEC or the local building codes.
2. Minimum wire size: 18 AWG twisted pair.
3. Maximum wire size: 14 AWG twisted pair.
4. High level amplifier connections = unshielded twisted pair.

   Low level amplifier connections = shielded twisted pair.

   Other connections = single conductor wire.
5. Maximum rating:

   25.2V RMS: 100W - 4.0A each input/output.

   70.7V RMS: 100W - 1.4A each input/output.
6. Maximum loop length: Refer to the decibel loss tables.
7. The wire length includes: The length of the wire from the ASC-1 to the amplifier, the length of the wire from the ASC-1 to the ZC Series of audio cards and back, and the length of the longest audio zone served by the amplifier.
8. If there is no backup amplifier, connect terminals 3 and 4 together. If one backup amplifier is shared by more than one ASC-1, connect all terminal 3s together and leave the terminal 4s unconnected.
9. Required for power limited wiring.

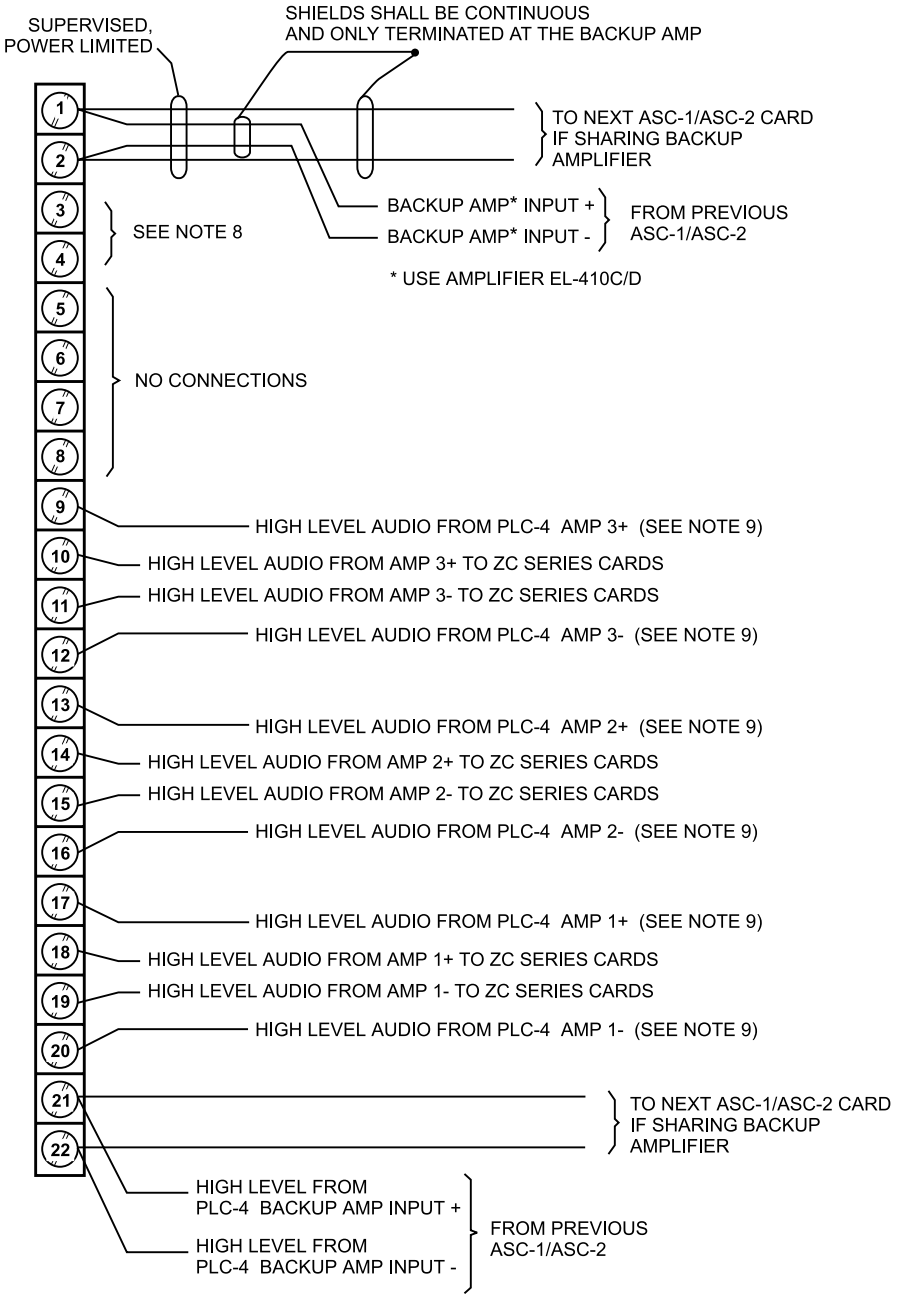


**Wiring the ASC-1**



Technical Manuals Online! - http://www.tech-man.com

# ASC-2 Connections and Ratings

**Electrical ratings:**
24VDC, 61mA
5VDC, 29mA

Use unshielded twisted pair for high level amplifier connections. Use shielded twisted pair for terminals 1 and 2. Use single-conductor wire for other connections.

Maximum wire length:
Refer to the decibel (dB) loss chart in the tables below. The wire length includes the length of the wire from the amplifier to the ASC-2, from the ASC-2 to the ZC series of audio cards, and the wire length in the longest audio zone served by the amplifier.

High level outputs:
25.2V RMS, 4.0A, 100W max
70.7V RMS, 1.4A, 100W max

Backup amplifier input:
1V RMS max

All wiring must be in accordance with Article 760 of NEC or the local building codes.

**Electrical connections:**
Some signal is lost in the zone wires due to line resistance. Refer to the tables below to determine the decibel loss for various wire gauges and lengths. A reduction in load reduces the loss. Use the largest wire size possible for the smallest loss.

**SPEAKER ZONE DECIBEL LOSS for 25.2V RMS, 35W load**

| Length | Gauge | | |
|---|---|---|---|
| | 14 AWG | 16 AWG | 18 AWG |
| (feet) | (loss in decibels) | | |
| 200 | 0.2 | 0.3 | 0.6 |
| 400 | 0.5 | 0.7 | 1.1 |
| 600 | 0.7 | 1.1 | 1.6 |
| 800 | 0.9 | 1.5 | 2.2 |
| 1000 | 1.2 | 1.8 | 2.7 |

**SPEAKER ZONE DECIBEL LOSS for 70.7V RMS, 25W load**

| Length | Gauge | |
|---|---|---|
| | 16 AWG | 18 AWG |
| (feet) | (loss in decibels) | |
| 200 | 0.04 | 0.06 |
| 400 | 0.07 | 0.11 |
| 600 | 0.11 | 0.17 |
| 800 | 0.14 | 0.22 |
| 1000 | 0.18 | 0.27 |



Technical Manuals Online! - http://www.tech-man.com

NOTES

1. All wiring must be in accordance with Article 760 of NEC or the local building codes.
2. Minimum wire size: 18 AWG twisted pair.
3. Maximum wire size: 14 AWG twisted pair.
4. High level amplifier connections = unshielded twisted pair.

   Low level amplifier connections = shielded twisted pair.

   Other connections = single conductor wire
5. Maximum rating:

   25.2V RMS: 100W - 4.0A each input/output.

   70.7V RMS: 100W - 1.4A each input/output.
6. Maximum loop length: Refer to the decibel loss tables.
7. The wire length includes: The length of the wire from the ASC-2 to the amplifier, the length of the wire from the ASC-2 to the ZC Series of audio cards and back, and the length of the longest speaker zone served by the amplifier.
8. End of Line device: 24K, ½W, 5% (P/N 140-820405)
9. If there is no backup amplifier, connect terminals 3 and 4 together. If one backup amplifier is shared by more than one ASC-2, connect all terminal 3s together and leave the terminal 4s unconnected.
10. Required for power limited wiring.

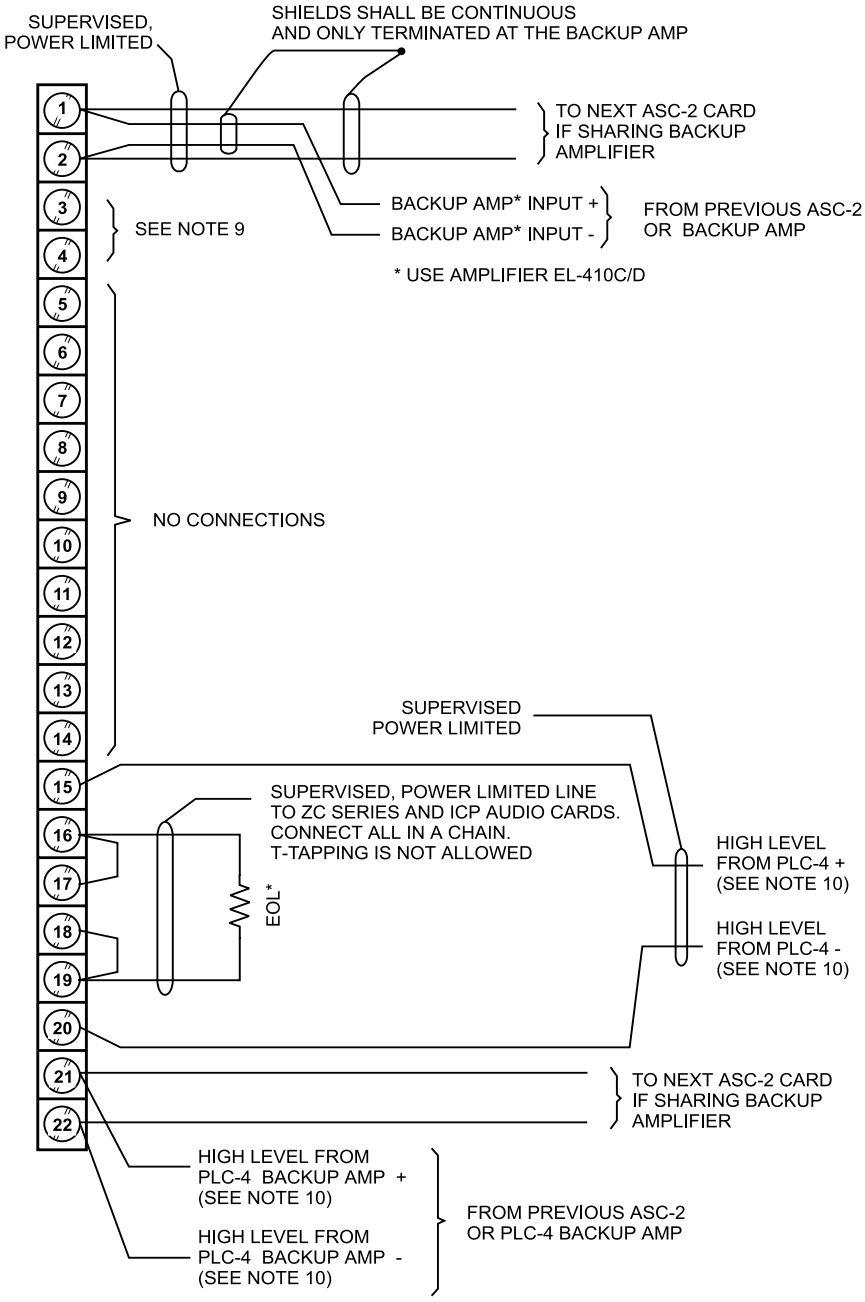


*EOL is located at the last ZC Series or ICP audio card

**ASC-2 Style Y Wiring Diagram**



Technical Manuals Online! - http://www.tech-man.com

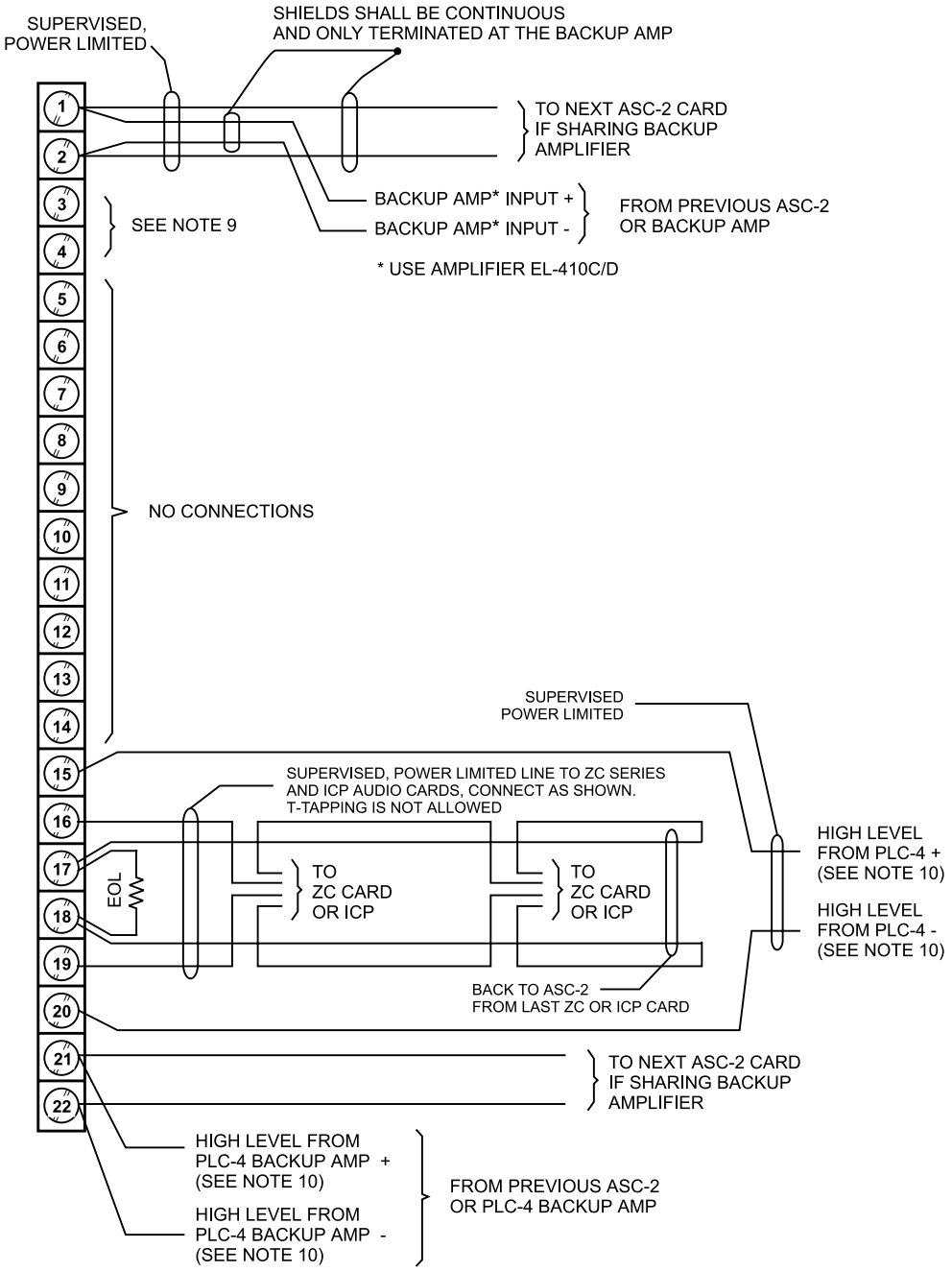


**ASC-2 Style Z Wiring Diagram**

NOTES

1. All wiring must be in accordance with Article 760 of NEC or the local building codes.
2. Minimum wire size: 18 AWG twisted pair.
3. Maximum wire size: 14 AWG twisted pair.
4. High level amplifier connections = unshielded twisted pair.

   Low level amplifier connections = shielded twisted pair.

   Other connections = single conductor wire.
5. Maximum rating:

   25.2V RMS: 100W - 4.0A each input/ output.

   70.7V RMS: 100W - 1.4A each input/ output.
6. Maximum loop length: Refer to the decibel loss tables.
7. The wire length includes:

   The length of the wire from the ASC-2 to the amplifier, the length of the wire from the ASC-2 to the ZC Series of audio cards and back, and the length of the longest speaker zone served by the amplifier.
8. End of Line resistor: 24K, ½W, 5% (P/N 140-820405).
9. If there is no backup amplifier, connect terminals 3 and 4 together. If one backup amplifier is shared by more than one ASC-2, connect all terminal 3s together and leave the terminal 4s unconnected.
10. Required for power limited wiring.



Technical Manuals Online! - http://www.tech-man.com

Technical Manuals Online! - http://www.tech-man.com

# CMI-300 Connections and Ratings

**Electrical ratings:**

Supervisory or Alarm

5 VDC, 96mA max

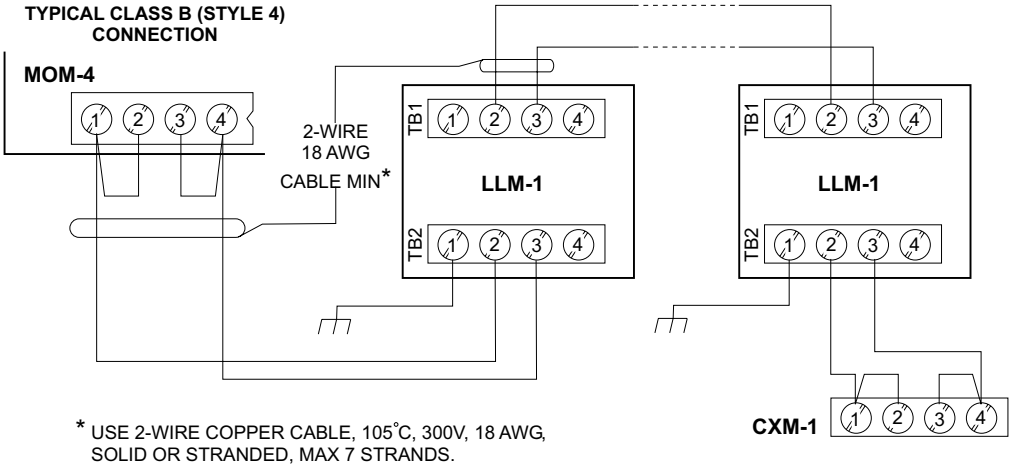


NOTES

1. All wiring must conform to local codes and to the authority having jurisdiction over the installation.
2. All circuits are rated 2 volts peak to peak, 1.3mA. All circuits are supervised.
3. Operates in full conformance with Style 4.

**CMI-300 Wiring - Typical Class B (Style 4) Connection**



Technical Manuals Online! - http://www.tech-man.com

NOTES

1. All wiring must conform to local codes and to the authority having jurisdiction over the installation.
2. All circuits are rated 2 volts peak to peak, 1.3mA. All circuits are supervised.
3. Operates in full conformance with Style 7.

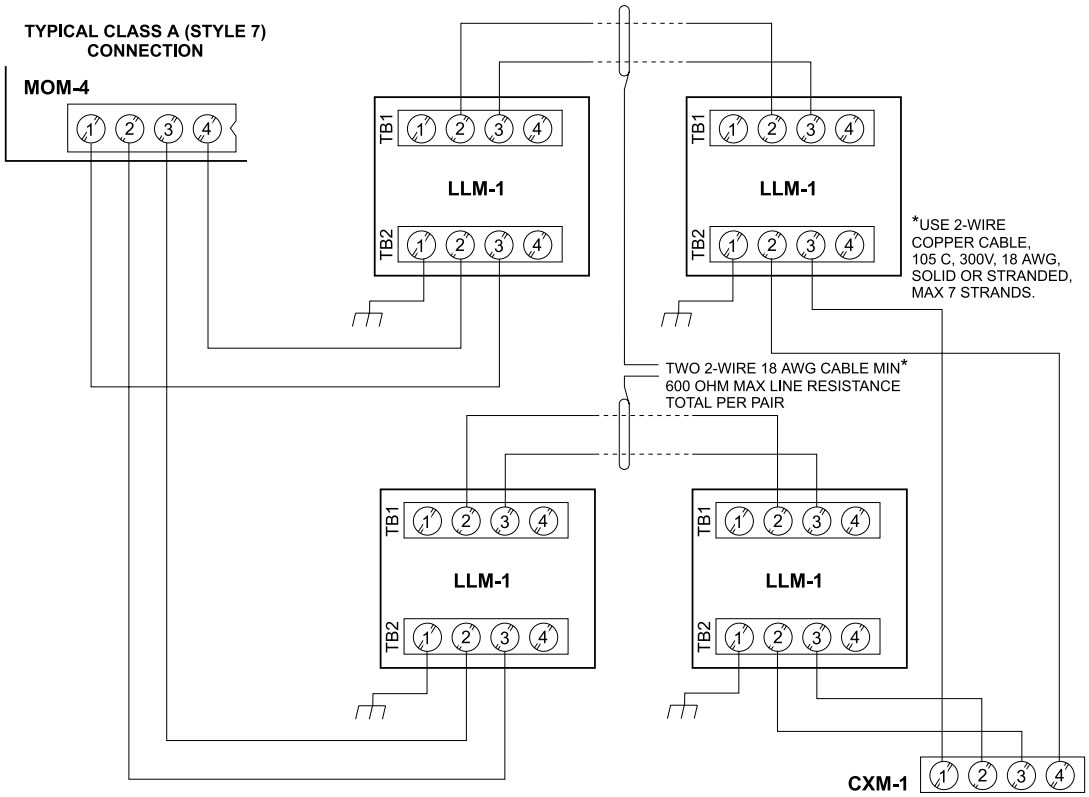


**CMI-300 Wiring - Typical Class A (Style 7) Connection**

NOTES

1. All wiring must conform to local codes and to the authority having jurisdiction over the installation.
2. All circuits are rated 2 volts peak to peak, 1.3mA. All circuits are supervised.
3. Operates in full conformance with Style 4.

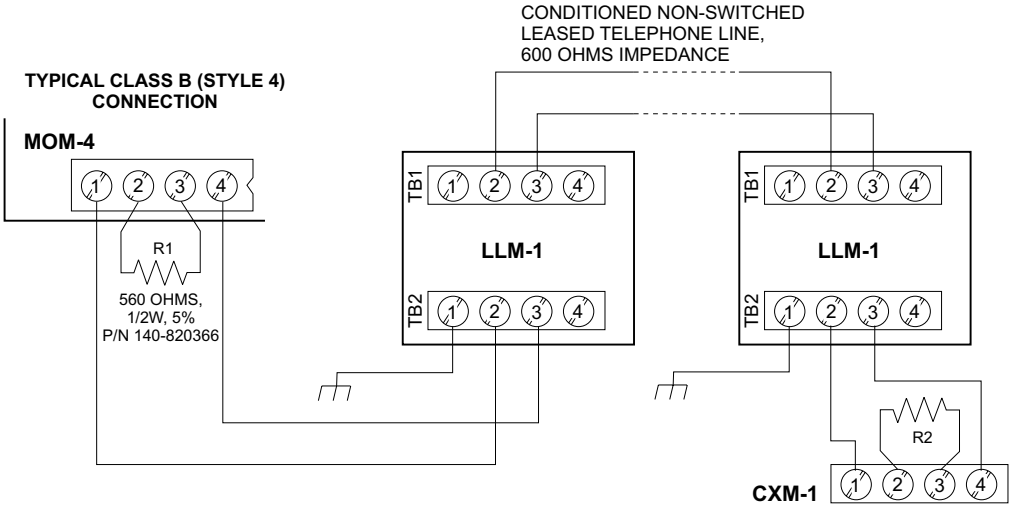


**CMI-300 Wiring - Typical Class B (Style 4) Connection Using Conditioned, Non-Switched Telephone Line**



Technical Manuals Online! - http://www.tech-man.com

# CRM-4 Connections and Ratings

**Electrical ratings:**

24 VDC
15mA (no energized relays)

Add: 18.7mA per energized relay
(75mA - all relays energized)

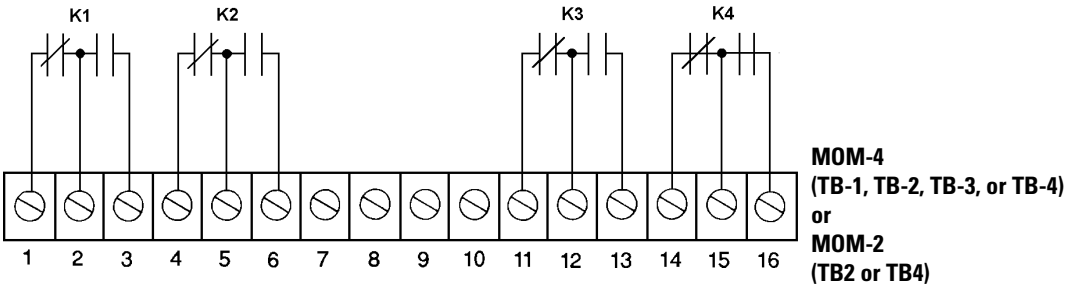


**CRM-4 Relay Wiring**

NOTES

1. Contact rating: 2A, 30VDC/120 VAC resistive.
2. Use only with power limited / Class 2 circuits.
3. Coils are supervised when de-energized.
4. Contacts are not supervised.
5. All relay contacts are shown in normal (de-energized) state.



Technical Manuals Online! - http://www.tech-man.com

Technical Manuals Online! - http://www.tech-man.com

# CSM-4 Connections and Ratings

Only the devices listed in **Compatible Notification Appliances**, P/N 315-096363 may be used. The UL identifiers for compatibility are the same as the model names specified.

**NOTIFICATION APPLIANCES (NFPA 72 Local)**

All wiring must be in accordance with Article 760 of NEC and the local building codes.

**Electrical ratings:**

| | |
|---|---|
| Supervisory | 24V unfiltered, full wave rectified 12mA max |
| Alarm | 24V unfiltered, full wave rectified 1.5A max |

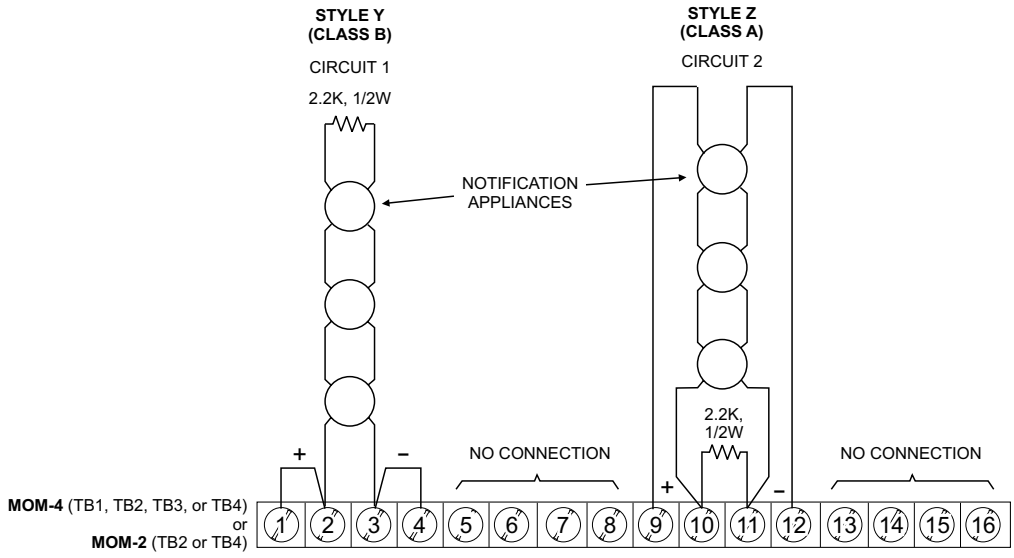


NOTES

1. Power limited to NFPA 70 per NEC 760.
2. Minimum wire size: 18 AWG.
3. Maximum resistance: 3 ohms total.
4. End of line device: 2.2K, ½W, P/N 140-820380.
5. Either circuit may be wired Class A or B.
6. Both circuits are supervised.
7. Polarity shown in supervisory state.

**CSM-4 Loop Wiring for Supervised Notification Appliance Circuit**



Technical Manuals Online! - http://www.tech-man.com

NOTES
1. Both circuits are not power limited.
2. The total loop resistance from the LLM-1 to the Municipal Tie, including the 14.5 ohms in the Municipal Tie, should not exceed 22.5 ohms.
3. Either circuit may be used.
4. Polarity shown in supervisory state.

## MUNICIPAL TIE (NFPA 72 Municipal Tie)

All wiring must be in accordance with Article 760 of NEC and the local building codes.

### Electrical ratings:

| | |
|---|---|
| Trip Coil | 14.5 ohms |
| Trip Current | 220 to 320mA DC (momentary) |
| Supervisory Current | 12mA DC |
| Voltage | 24V unfiltered, full wave rectified |

**Minimum emergency power**
60 hour standby
5 minute alarm

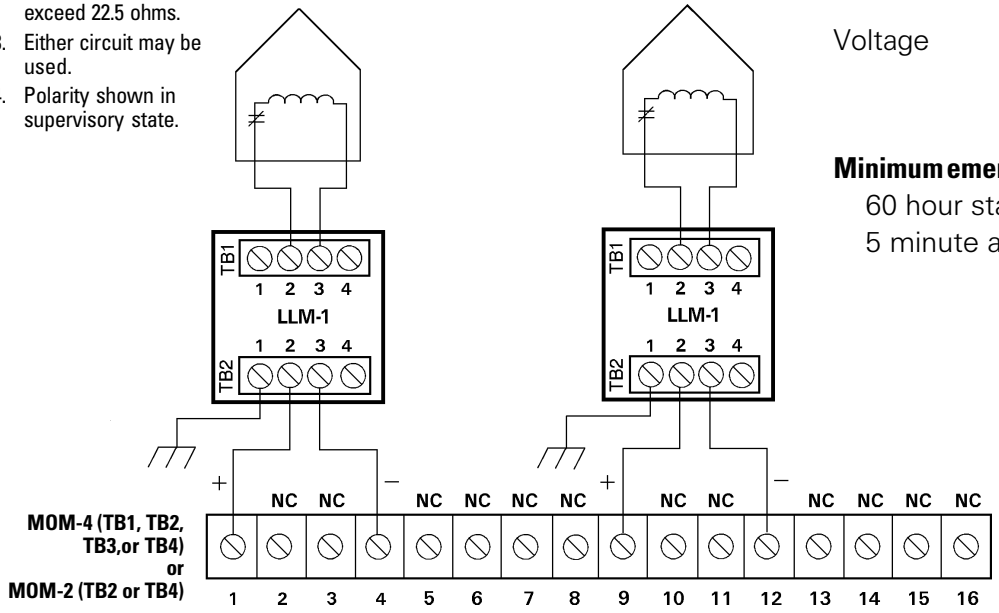


**CSM-4 Loop Wiring for Supervised Municipal Tie**

## LEASED LINE (NFPA 72 Remote Station)

All wiring must be in accordance with Article 760 of NEC and the local building codes.

When a CSM-4 circuit is used as a Leased Line trouble output, SW1 and SW2 on switch S2 must be set. These positions permit the degrade trouble bus to activate the trouble line.

### Electrical Ratings:

24V unfiltered, full wave rectified
Load must be a compatible polarity reversal labeled *remote station receiver unit*

**Rated current**
3mA to 9mA, alarm/supervisory

**External circuit resistance**
2K to 5K ohms

**Minimum emergency power**
60 hour standby
5 minute alarm



Technical Manuals Online! - http://www.tech-man.com

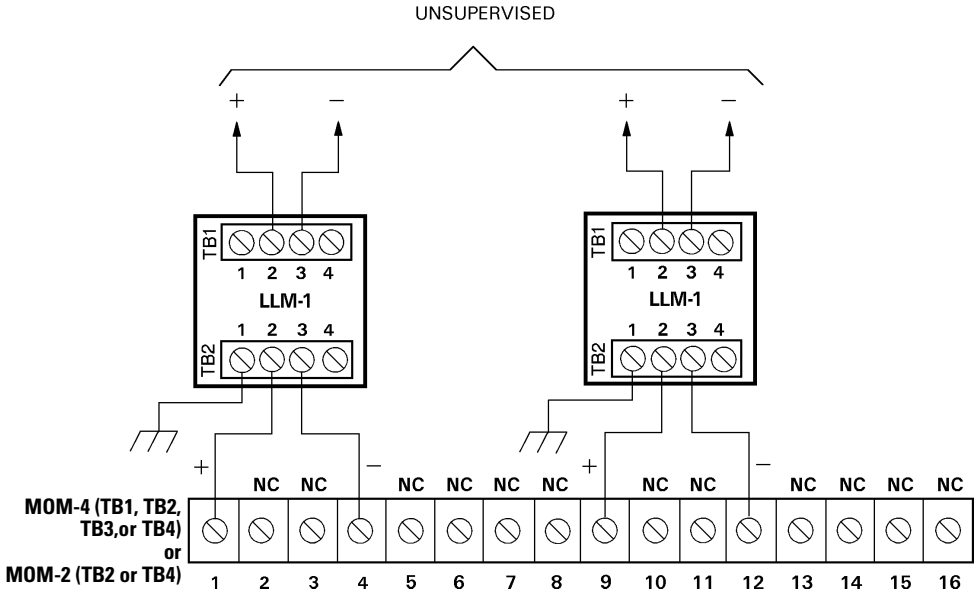


NOTES
1. Power limited to NFPA 70 per NEC 760.
2. External resistance: 2K-5K ohms.
3. Both circuits are not supervised.
4. Polarity shown in supervisory state.

**CSM-4 Leased Line Circuit Wiring**

## RELEASING SERVICE (Per NFPA 12A, NFPA 13, and NFPA 2001)

All wiring must be in accordance with Article 760 of NEC and the local building codes.

Set all positions of switch S2 to OFF (OPEN).

## Electrical Ratings:

| | |
|---|---|
| Solenoids | 24 VDC<br>16.8 watts max<br>700mA max |
| Supervisory | 12mA max |
| Alarm | 800mA max |

**COMPATIBLE SOLENOIDS**

| | |
|---|---|
| NFPA 13 | ASCO Model T8210A107<br>ASCO Model R8210A107<br>ASCO Model 8210A107<br>SKINNER Model LV2LBX25 |
| NFPA 12A | PYRO P/N 500-982631<br>PYRO P/N 500-286652<br>PYRO P/N 500-083377<br>PYRO P/N 500-086929 |
| NFPA 2001 | PYRO P/N 500-486500 |

NOTES
1. Releasing zones are not power limited.
2. Maximum resistance: 3 ohms total.
3. No end of line device required.
4. Both circuits are supervised for opens only.
5. Polarity show in supervisory state.

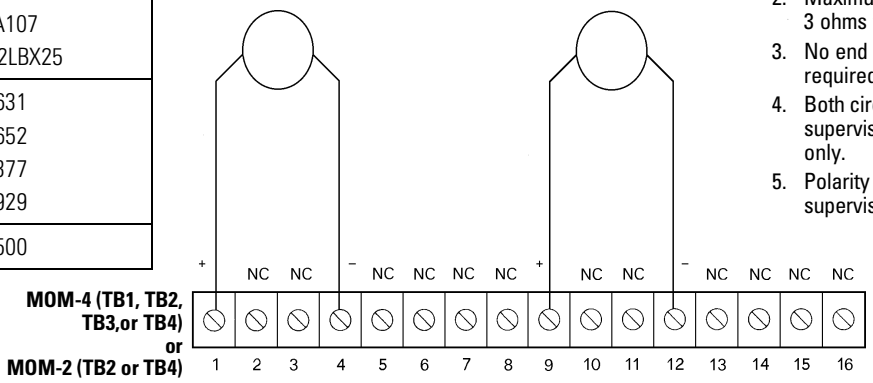


**CSM-4 Loop Wiring for use as Releasing Service (per NFPA 12A, NFPA 13, and NFPA 2001)**



Technical Manuals Online! - http://www.tech-man.com

Technical Manuals Online! - http://www.tech-man.com



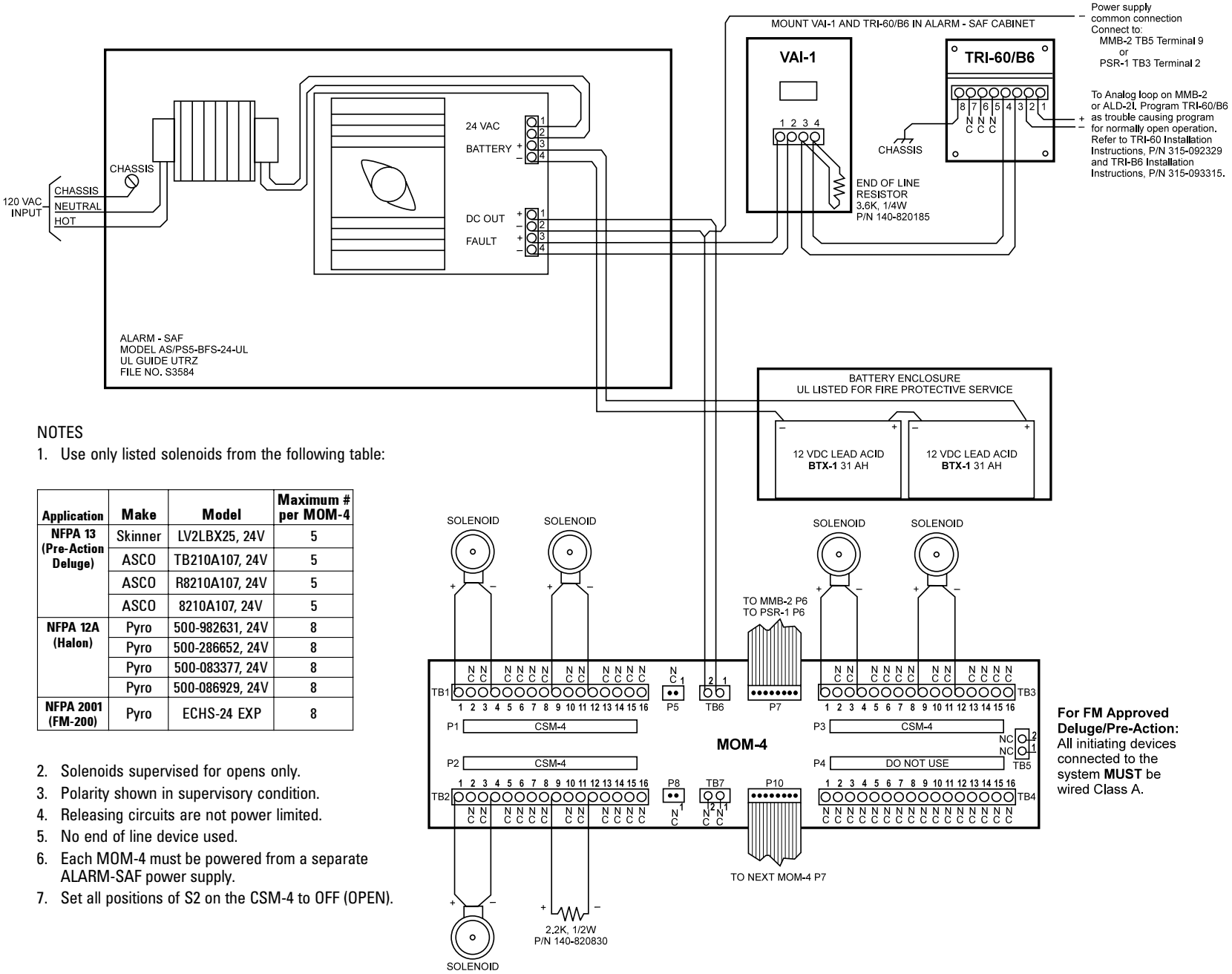


NOTES

1. Use only listed solenoids from the following table:

| Application | Make | Model | Maximum # per MOM-4 |
|---|---|---|---|
| NFPA 13 (Pre-Action Deluge) | Skinner | LV2LBX25, 24V | 5 |
| | ASCO | TB210A107, 24V | 5 |
| | ASCO | R8210A107, 24V | 5 |
| | ASCO | 8210A107, 24V | 5 |
| NFPA 12A (Halon) | Pyro | 500-982631, 24V | 8 |
| | Pyro | 500-286652, 24V | 8 |
| | Pyro | 500-083377, 24V | 8 |
| | Pyro | 500-086929, 24V | 8 |
| NFPA 2001 (FM-200) | Pyro | ECHS-24 EXP | 8 |

2. Solenoids supervised for opens only.
3. Polarity shown in supervisory condition.
4. Releasing circuits are not power limited.
5. No end of line device used.
6. Each MOM-4 must be powered from a separate ALARM-SAF power supply.
7. Set all positions of S2 on the CSM-4 to OFF (OPEN).

**For FM Approved Deluge/Pre-Action:** All initiating devices connected to the system **MUST** be wired Class A.

## MXL Releasing Service Wiring (per NFPA 12A, NFPA 13, and NFPA 2001)

# CZM-1B6 Connections and Ratings

**Electrical ratings:**

| | |
|---|---|
| Supervisory | 18-24.5 VDC<br>4mA max |
| Alarm | 18-24.5 VDC<br>45mA max |
| Zone Resistance | 35 ohms total |
| Max Ripple | 500mV |

**Electrical connections:**

There are three basic connections to the CZM-1B6 as follows:

**Initiating Devices**

The CZM-1B6 supports one zone of initiating devices in either Class A (Style D) or Class B (Style B). The initiating devices are connected to terminals 5-8 on the CZM-1B6 terminal block.

Only the devices listed in **Appendix A, Table 1 - Conventional Detectors: Compatible With CZM-1B6** on page A-1 may be used. Use up to 15 detectors, any combination of those listed. Only one PB-1191, and no additional devices, can be connected to a CZM-1B6. Detector operated accessories cannot be used with the CZM-1B6. The model numbers listed are the UL compatibility identifiers.

NOTES

1. Power limited to NFPA 70 per NEC 760.
2. Minimum wire size: 18 AWG.
3. Maximum resistance: 35 ohms total.
4. Each detector or group of detectors, requires a two-wire circuit of thermoplastic fixture wire enclosed in conduit or limited energy shielded cable without conduit, if permitted by local building codes.
5. End of line device: 4.7K, ¼W, P/N 140-820188.
6. Either circuit may be wired Class A (Style D) or Class B (Style B).
7. 15 devices maximum per circuit.
8. Initiating circuit is supervised.

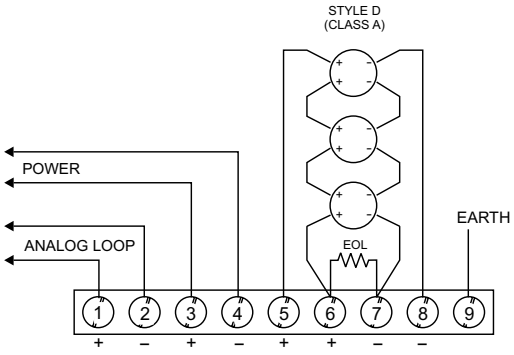


**CZM-1B6 Class A (Style D) Wiring**

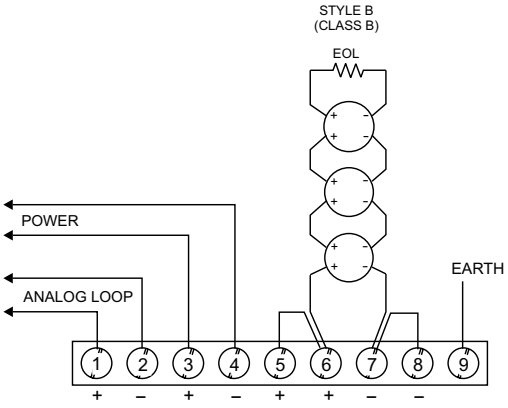


**CZM-1B6 Class B (Style B) Wiring**



Technical Manuals Online! - http://www.tech-man.com

### PB-1191

When the PBA-1191 is used, the 2-position plug from jumper J1 must be removed as follows:

- Remove the screw from the center of the CZM-1B6 plastic cover and place it to one side.
- Remove the circuit board and locate jumper J1.
- Remove the 2-position plug fom J1.
- Reassemble the circuit board and plastic cover using the screw that was removed in the first step.
- Be sure to use the correct end of line device with the CZM-1B6 in this configuration.

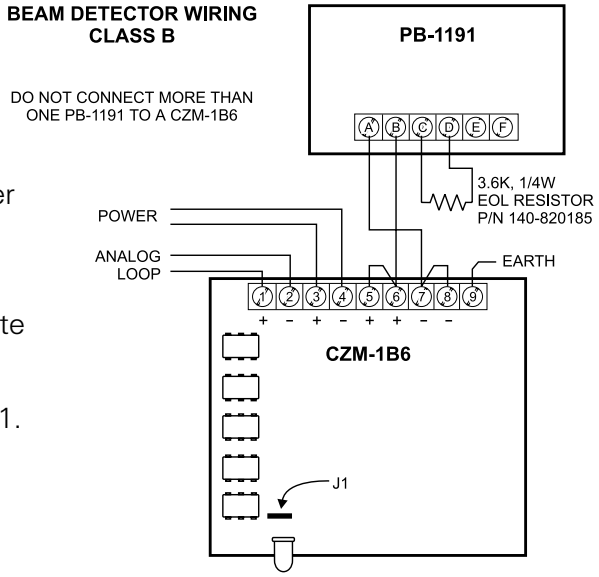


**PB-1191 Installation**

NOTES

1. Power limited to NFPA 70 per NEC 760.
2. Minimum wire size: 18 AWG.
3. Maximum resistance: 100 ohms total.
4. Maximum capacitance: 0.4µF between + loop and – loop. 0.8µF between + loop and chassis. 0.8µF between – loop and chassis.
5. Each detector or group of detectors, requires a two-wire circuit of thermoplastic fixture wire enclosed in conduit or limited energy shielded cable without conduit, if permitted by local building codes.
6. No end of line device required.
7. Operates in full conformance with Style 6.
8. Operates in full conformance with Style 4.
9. Either loop may be wired Class A or B.
10. 60 devices maximum per loop.
11. T-tapping is NOT allowed on Class A loops.
12. Both circuits are supervised.

## Analog Loops

The CZM-1B6 communicates with the MXL via the MXL's analog loops, which may be on the MMB-1/-2 or the optional ALD-2I module. The analog loops may be wired Class A (Style 6) or Class B (Style 4).

ALD-2I

| MOM-4 TB2 | | MOM-4 TB1 | | MMB TB2 | MMB TB3 |
|---|---|---|---|---|---|
| LOOP 1 | LOOP 2 | LOOP 1 | LOOP 2 | LOOP 1 | LOOP 2 |
| 4 | 8 | 4 | 8 | 4 | 4 |
| 3 | 7 | 3 | 7 | 3 | 3 |
| 2 | 6 | 2 | 6 | 2 | 2 |
| 1 | 5 | 1 | 5 | 1 | 1 |
| 4 | 8 | 4 | 8 | 4 | 4 |
| 3 | 7 | 3 | 7 | 3 | 3 |
| 2 | 6 | 2 | 6 | 2 | 2 |
| 1 | 5 | 1 | 5 | 1 | 1 |

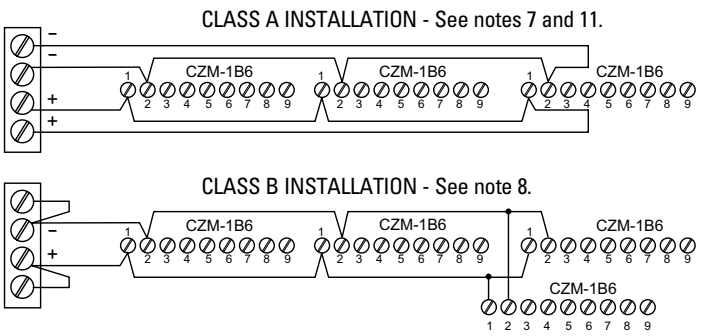


**Analog Loop Wiring**



Technical Manuals Online! - http://www.tech-man.com

## CZM-1B6 Power

The CZM-1B6 receives its power from the CZM-1B6 power output on the MMB-1/-2 or PSR-1. This power is available on TB5 of the MMB-1/-2 on terminals 9-12 or TB3 on the PSR-1 on terminals 3-6. The power may be wired as Class A or Class B. Since the CZM-1B6 monitors the power at its screw terminals, it is possible to T-tap the power connection; this can be done only in the Class B configuration.

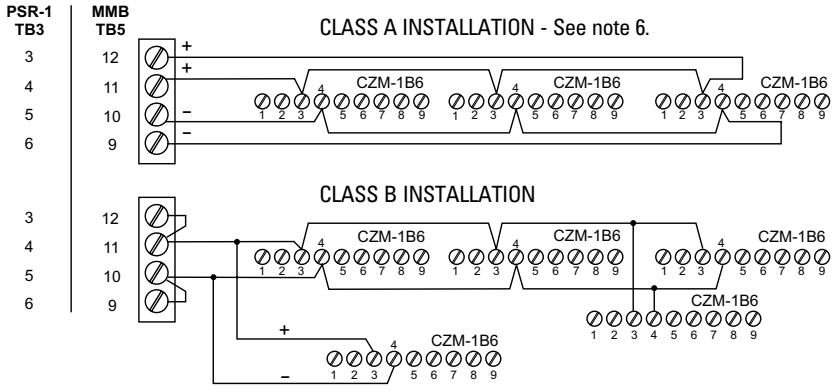


**CZM-1B6 Power Wiring**

NOTES

1. Power limited to NFPA 70 per NEC 760.
2. Minimum wire size: 18 AWG.
3. Maximum resistance: 4 ohms total.
4. No end of line device required.
5. Circuit is supervised.
6. T-tapping is NOT allowed on Class A loops.
7. For loop resistance, refer to the PSR-1 Installation Instructions, P/N 315-090911, the MMB-1 Installation Instructions, P/N 315-090375, or the MMB-2 Installation Instructions, P/N 315-095097, as applicable.



Technical Manuals Online! - http://www.tech-man.com

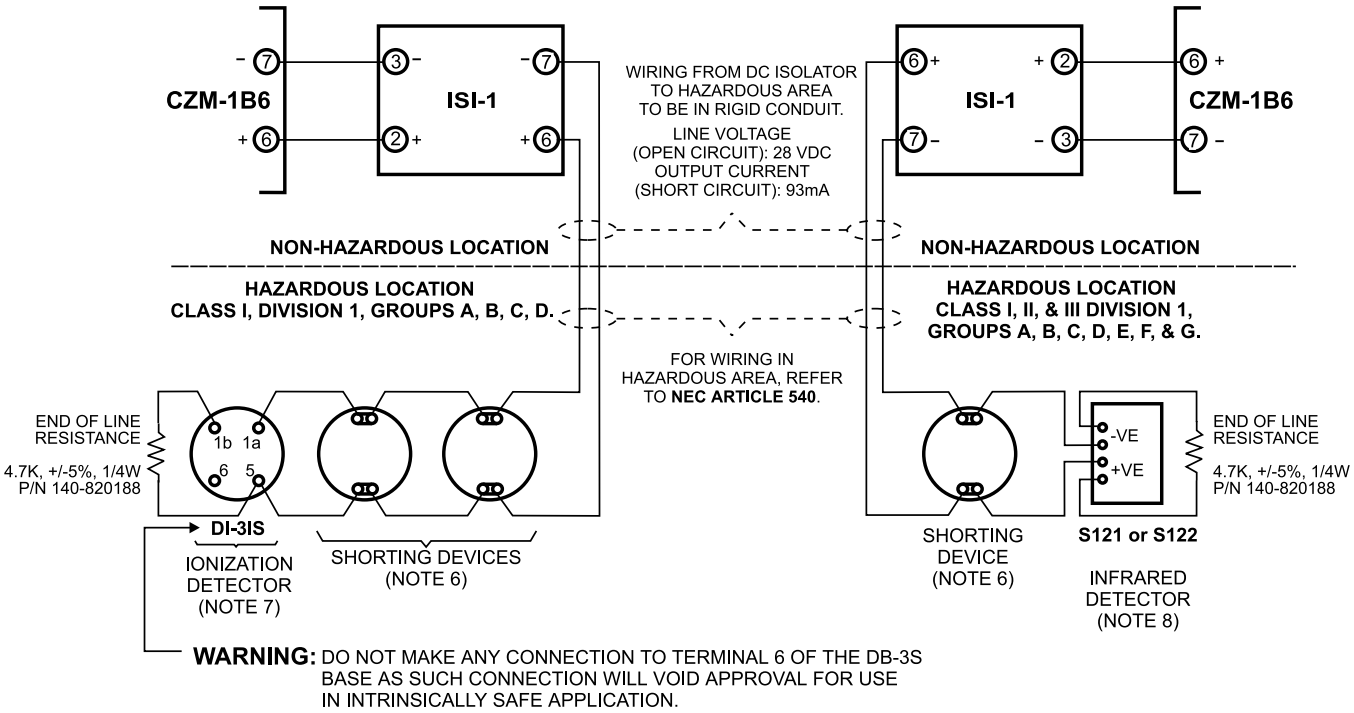


NOTES

1. Intrinsically Safe Output:
   Open Circuit Voltage: 28 VDC
   Short Circuit Current: 93mA
2. Maximum loop resistance must not exceed 35 ohms.
3. A maximum of ten DI-3IS Ionization Detectors or up to five S121 or S122 Flame Detectors can be used in addition to mechanical (non-energy storing) shorting devices.
4. Maximum safe system voltage is 250 VAC.
5. For mounting and installation of the ISI-1, see the ISI-1 instructions.
6. Only mechanical (non-energy storing) shorting devices such as the MS-51 Manual Station may be used.
7. WARNING: Do not make any connection to terminal 6 of the DB-3S base. Such a connection would void use in an intrinsically safe application.
8. In addition, S121 and S122 are also approved for use in Class II and Class III, Groups E, F, and G.
9. For guidance on installation see ANSI/ISA RP 12.6, "Installation of Intrinsically Safe Instrument Systems in Class I Hazardous Locations".
10. For DI-3IS information, see the DI-3 Series installation instructions, P/N 315-081943.
11. For S121 and S122 information, see the installation instructions, P/N 315-085258.

## Intrinsically Safe Zone Wiring
## FM Approved Only (Not UL Approved)



Technical Manuals Online! - http://www.tech-man.com

# CZM-4 Connections and Ratings

**Electrical ratings:**

| | |
|---|---|
| Supervisory | 21.7-22.8 VDC<br>4mA max |
| Alarm | 21.7-22.8 VDC<br>180mA per zone max |
| Max ripple | 400mV |

**Initiating devices per zone:**

Up to 30 detectors, any combination of those listed in **Appendix A, Table 1 - Conventional Detectors** (except the PBA-1191), on page A-1, may be used. Up to five waterflow switches or 20 tamper switches may be used. Wiring may be Style D (Class A) or Style B (Class B).

NOTES

1. Power limited to NFPA 70 per NEC 760.
2. Minimum wire size: 18 AWG.
3. Maximum resistance: 70 ohms total (40 ohms if relay bases are used).
4. Each detector or group of detectors, requires a two-wire circuit of thermoplastic fixture wire enclosed in conduit or limited energy shielded cable without conduit, if permitted by local building codes.
5. Loops may be wired Class A (Style D) or Class B (Style B).
6. 30 devices maximum per loop.
7. All circuits are supervised.
8. Do not connect more than one PBA-1191 to each zone. (Refer to PBA-1191 instruction, P/N 315-095424 for further information.)
9. Do not mix smoke detectors with the PBA-1191.
10. The PBA-1191 requires Rev. 3 or higher of CZM-4 firmware.

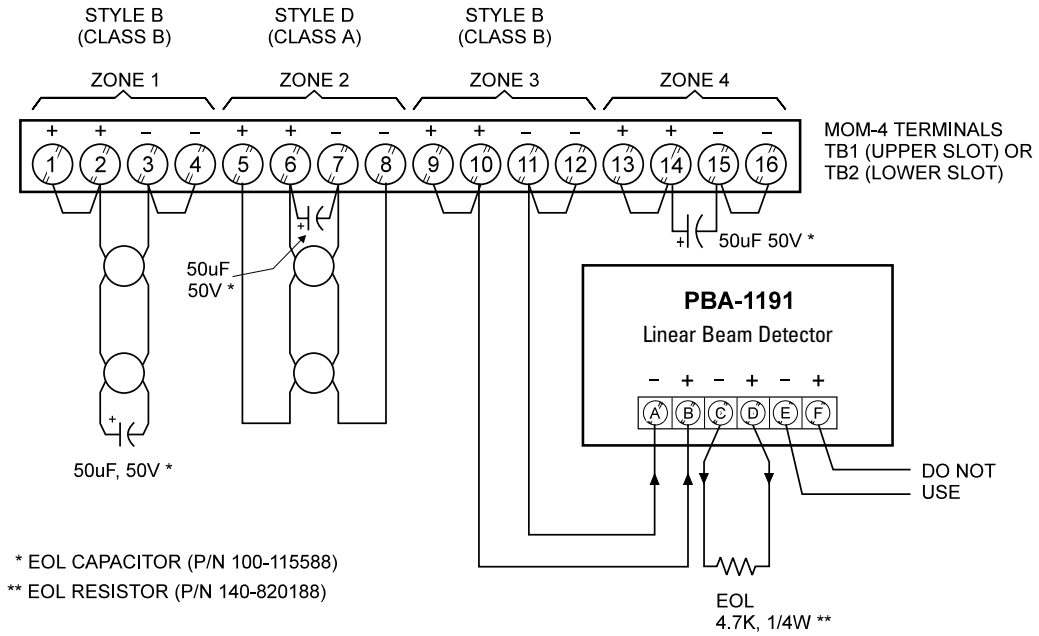


**CZM-4 Wiring**



Technical Manuals Online! - http://www.tech-man.com

Technical Manuals Online! - http://www.tech-man.com

# D2300CP Connections and Ratings

**Electrical ratings:**

| | |
|---|---|
| Input Power | 5 VDC, 200mA max |
| Battery power | 24 VDC, 50mA max |
| RS-485 | 8V (P-P), 60mA max |
| Transmitter power | 25µW (-16dBm) (62.5/125 Fiber) |

**RS-485 Network**

The RS-485 network connects to the D2300CP on the terminal block with the markings D(1), GRD(2) and D(3). **Do not connect the terminal marked GRD.** For Style 4 networks one D2300CP is needed at each Fiber Optic drop. For Style 7 networks two D2300CPs are needed at each drop. End of line devices are required on each RS-485 pair in the system. Install them at the extreme ends of each pair.

**Fiber Connections**

The D2300CP can function as both a repeater and an end point unit. When used as an end point, connect to the fiber connectors labeled A. Make no connection to the B connectors. In the repeater mode use both pairs of connectors, A and B.

Two Fiber Optic cables are required between each pair of D2300CPs. Use a high quality duplex Fiber Optic cable containing either 50/125 or 62.5/125 fiber. Duplex fiber optic cable has two cables in a single shield similar to electrical zip cord. Use ST style fiber connectors. Follow the manufacturer's instructions for terminating the fiber.

When installing the fiber pairs, each fiber must connect between the transmit data (DATA XTMR) on one D2300CP and the receive data line (DATA REC) on the other D2300CP.

**Indicators**

The D2300CP has five LED indicators for Power and Status.

The LEDs are located on the side of the module with the Fiber Optic connectors. The Power LED is red and lights whenever there is 5 VDC. Both channels A and B have a yellow and green LED. The green LED indicates that the D2300CP is transmitting data on the channel. The yellow LED lights when data is received.



Technical Manuals Online! - http://www.tech-man.com

### 5 VDC Current Calculation

The 5 VDC output ratings for the MMB-1/-2 and PSR-1 are:

| | |
|---|---|
| MMB-1/-2 | 500mA at 5 VDC |
| PSR-1 | 800mA at 5 VDC |

Be sure to calculate the power supply load (See **Appendix D - MXL Power Supply Load Calculations**) and include the D2300CP in this calculation. If the total is greater than the ratings for either the MMB-1/2 or PSR-1, a PS-5A must be used to power the D2300CP. Refer to the *PS-5A Installation Instructions*, P/N 315-092367, for wiring diagrams.

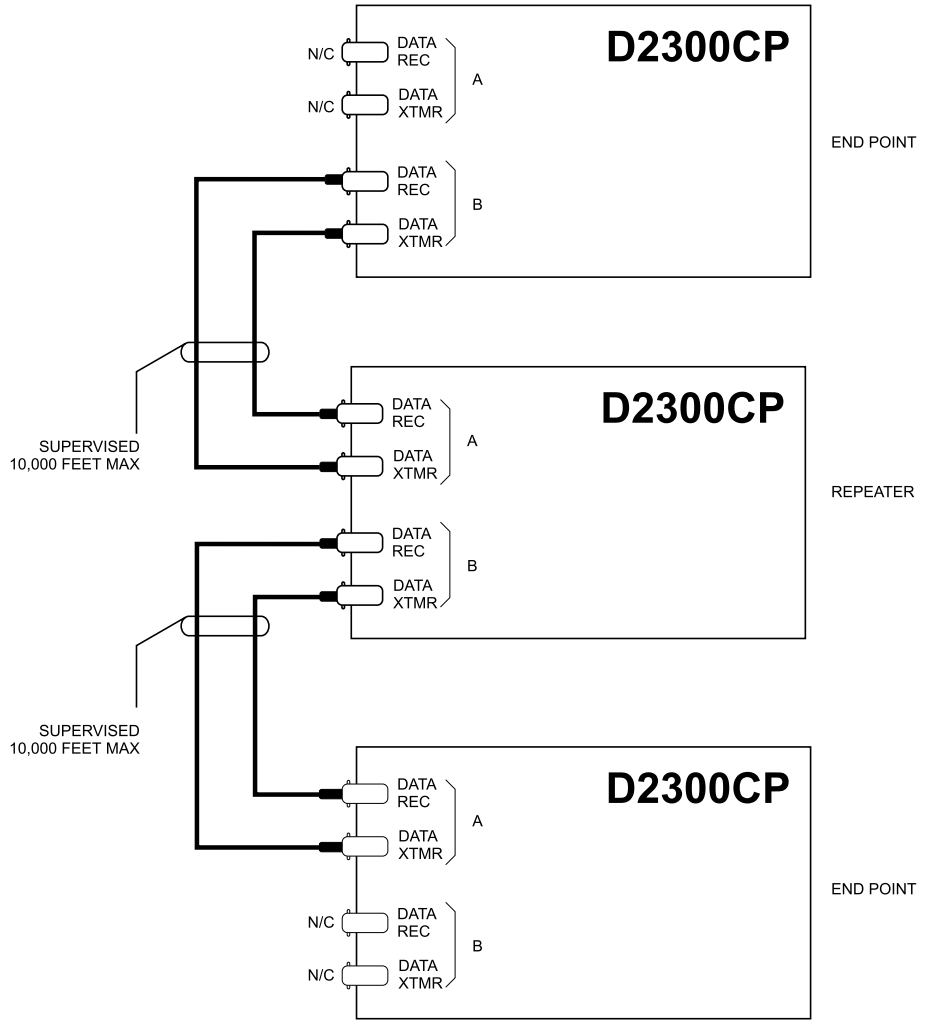


**Wiring the D2300CP as Both a Repeater and End Point Unit**



Technical Manuals Online! - http://www.tech-man.com

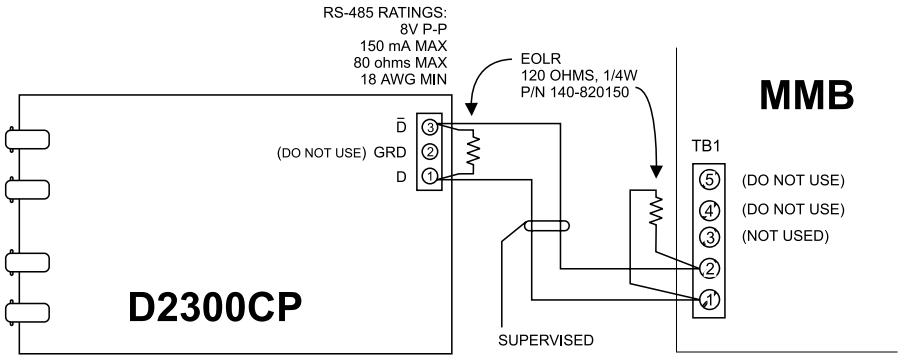


**Wiring the RS-485 Network in Style 4**

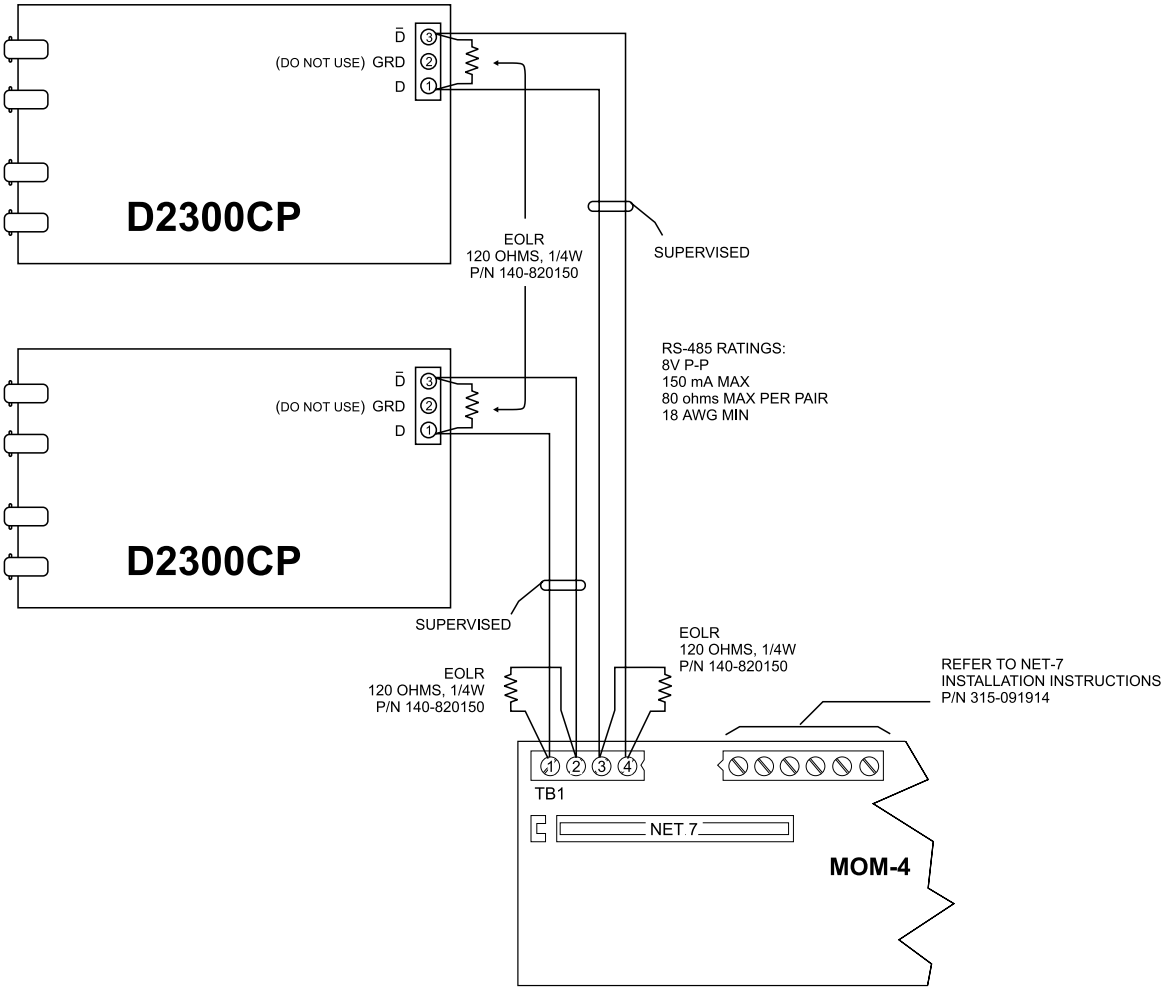


**Wiring the RS-485 Network in Style 7**



Technical Manuals Online! - http://www.tech-man.com

Technical Manuals Online! - http://www.tech-man.com

# DMC-1 Connections and Ratings

**Electrical ratings:**
5 VDC, 50mA

Auxiliary power supply input for manual recording on bench only (Use any UL listed 12 VDC regulated power supply):
12 VDC, 50mA

| | |
|---|---|
| J1 audio input level | 10mV RMS nominal (25mV RMS max.) |
| J2 audio input level | 500 mV RMS nominal (1.5V RMS max.) |
| Total time for all custom recorded phrases | 30 seconds |

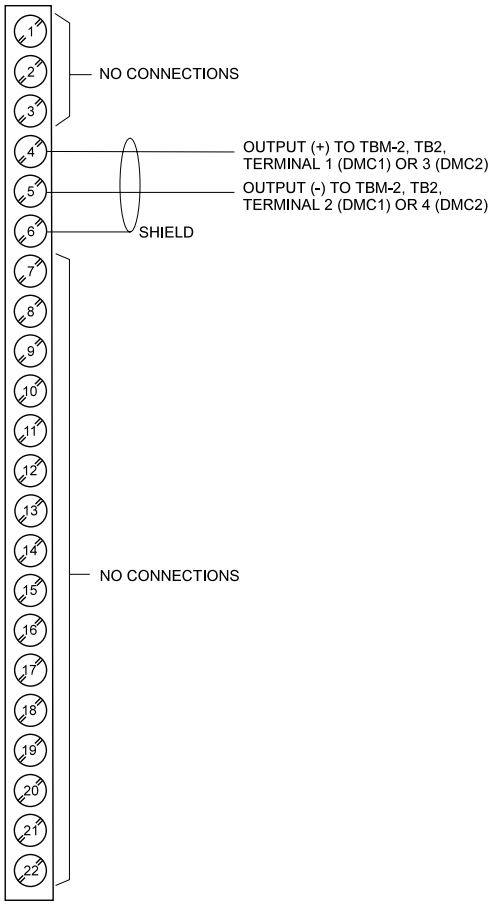


**DMC-1 Wiring Diagram Showing Output Connections**

NOTES
1. Power limited to NFPA 70 per NEC 760.
2. Minimum wire size: 18 AWG.
3. Maximum resistance: 3 ohms total.
4. Use shielded twisted pair cable for output connections.



Technical Manuals Online! - http://www.tech-man.com

NOTES

1. Power limited to NFPA 70 per NEC 760.
2. Minimum wire size: 18 AWG.
3. Maximum resistance: 3 ohms total.
4. Use shielded twisted pair cable for output connections.
5. The amplifier can be any UL listed unit rated for the connected speaker with an input impedance of 10K ohms or higher. The amplifier is not part of the MXLV System.
6. During benchtop recording, the OMM-1/-2 module used must not be part of an MXLV System.

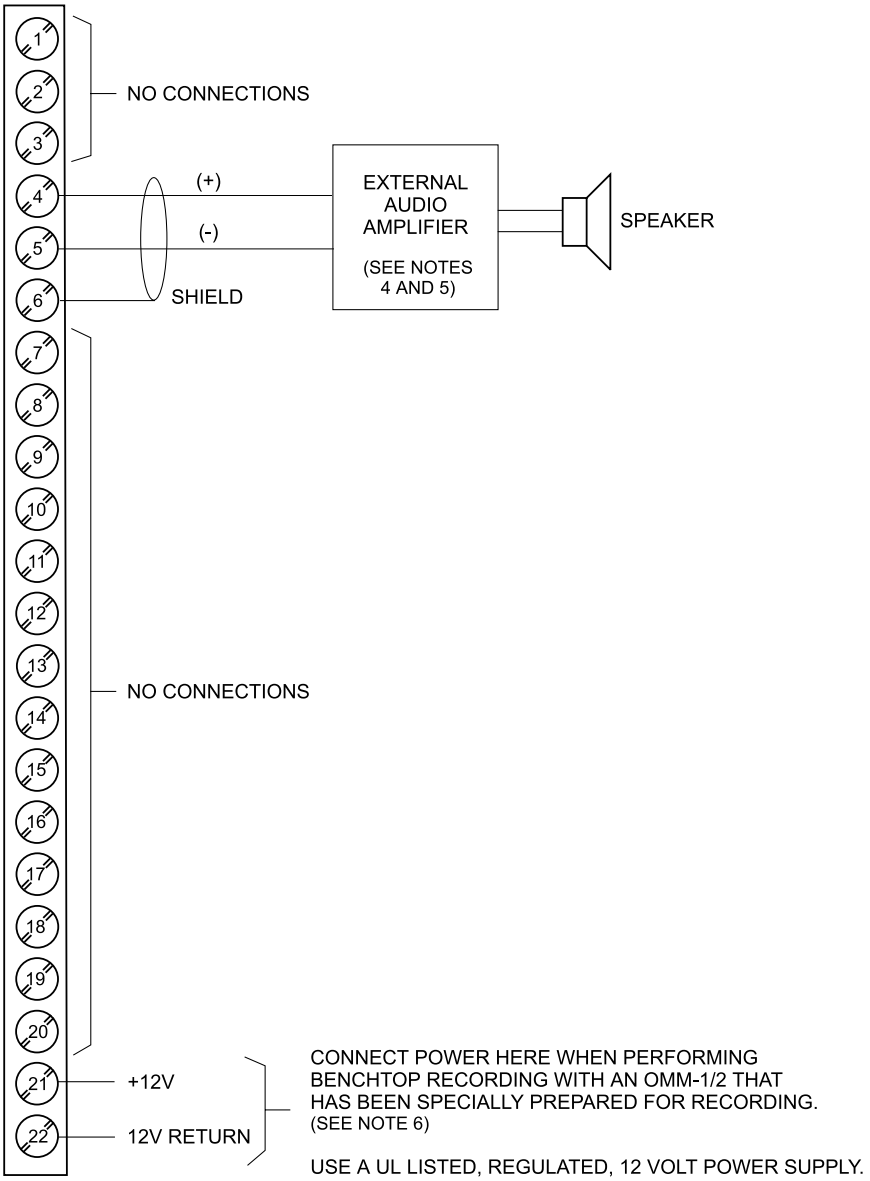


**DMC-1 Wiring Diagram Showing Benchtop Manual Recording Connections**



Technical Manuals Online! - http://www.tech-man.com

# ICP-B6 Connections and Ratings

## Analog Loop

The ICP-B6 communicates with the MXL through its analog addressable loops. These loops are on either the MMB-1/-2 or on the optional ALD-2I module of the MOM-4. They may be wired for Style 6 (Class A) or Style 4 (Class B). The figure below shows both wiring types and the connections to either the MMB-1/2 or to the MOM-4 when the ALD-2I module is used. The table lists the maximum output currents allowed.

**MAXIMUM ALLOWABLE ICP-B6 OUTPUT CIRCUIT LINE RESISTANCE FOR SPECIFIED DC RISER CURRENT AND LINE RESISTANCE**

| MAXIMUM DC RISER CURRENT (in Amps) | DC RISER RESISTANCE (in Ohms) | | | | | |
|---|---|---|---|---|---|---|
| | .1 Ohm | 0.25 Ohm | 0.5 Ohm | 0.75 Ohm | 1 Ohm | 1.5 Ohms |
| 8 | 2.46 | 1.67 | .33 | --- | --- | --- |
| 7 | 2.53 | 1.83 | .66 | --- | --- | --- |
| 6 | 2.60 | 2.00 | 1.00 | --- | --- | --- |
| 5 | 2.67 | 2.16 | 1.33 | .5 | --- | --- |
| 4 | 2.73 | 2.33 | 1.67 | 1.00 | .33 | --- |
| 3 | 2.80 | 2.50 | 2.00 | 1.50 | 1.00 | --- |
| 2 | 2.86 | 2.67 | 2.33 | 2.00 | 1.67 | 1.00 |
| 1 | 2.93 | 2.83 | 2.67 | 2.50 | 2.33 | 2.00 |
| .5 | 2.96 | 2.92 | 2.83 | 2.75 | 2.67 | 2.50 |
| MAXIMUM LOOP RESISTANCE FOR EACH ICP-B6 ON RISER | | | | | | |

NOTES:
1. Resistances specified are for both wires.
2. If higher currents are required, Siemens Building Technologies, Inc. recommends using a local auxiliary supply which is UL listed for fire protection signalling use. The supply should be rated between 24 and 27.3 VDC.

| ALD-2I MOM-4 TB2 | | ALD-2I MOM-4 TB1 | | MMB TB2 | MMB TB3 |
|---|---|---|---|---|---|
| LOOP 1 | LOOP 2 | LOOP 1 | LOOP 2 | LOOP 1 | LOOP 2 |
| 4 | 8 | 4 | 8 | 4 | 4 |
| 3 | 7 | 3 | 7 | 3 | 3 |
| 2 | 6 | 2 | 6 | 2 | 2 |
| 1 | 5 | 1 | 5 | 1 | 1 |
| 4 | 8 | 4 | 8 | 4 | 4 |
| 3 | 7 | 3 | 7 | 3 | 3 |
| 2 | 6 | 2 | 6 | 2 | 2 |
| 1 | 5 | 1 | 5 | 1 | 1 |

LOOP RESISTANCE 100 OHMS MAX
18 AWG MINIMUM WIRE

NO EOL DEVICE REQUIRED
SUPERVISED, POWER LIMITED PER NEC 760

ALL WIRING MUST CONFORM TO NATIONAL AND LOCAL ELECTRICAL CODES

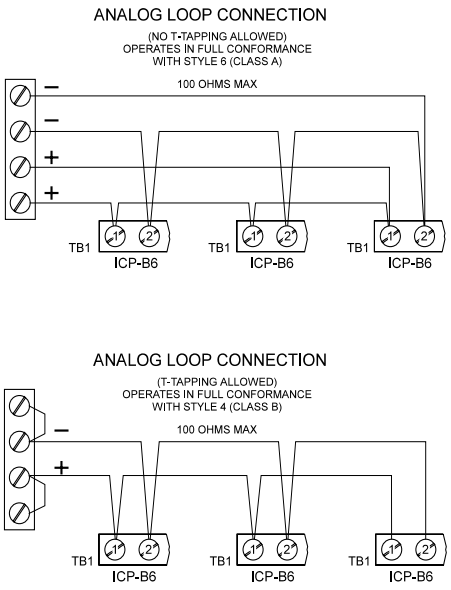


**Analog Loop Wiring**



Technical Manuals Online! - http://www.tech-man.com

The ICP-B6 module can be used in four different ways:

**1. Using the ICP-B6 as an NAC Module**
This notification appliance application uses the principle of polarity reversal when there is an alarm. The figure below shows the polarity connection in a supervisory condition. When using the ICP-B6 as a supervised NAC output module with notification appliance devices, cut jumper JP2. Refer to **Compatible Notification Appliances** P/N 315-096363.

When used as an NAC module, the output circuit is power limited. The ICP-B6 maximum current is 1.5A at 24 VDC. If the 24 VDC is lost or the NAC line is broken or shorted, the trouble condition INPUT DEVICE RESPONSE TOO LOW displays at the MXL/MXLV control panel. See the **Line Resistance** chart on the previous page for the allowable line resistance for each ICP-B6 output circuit.

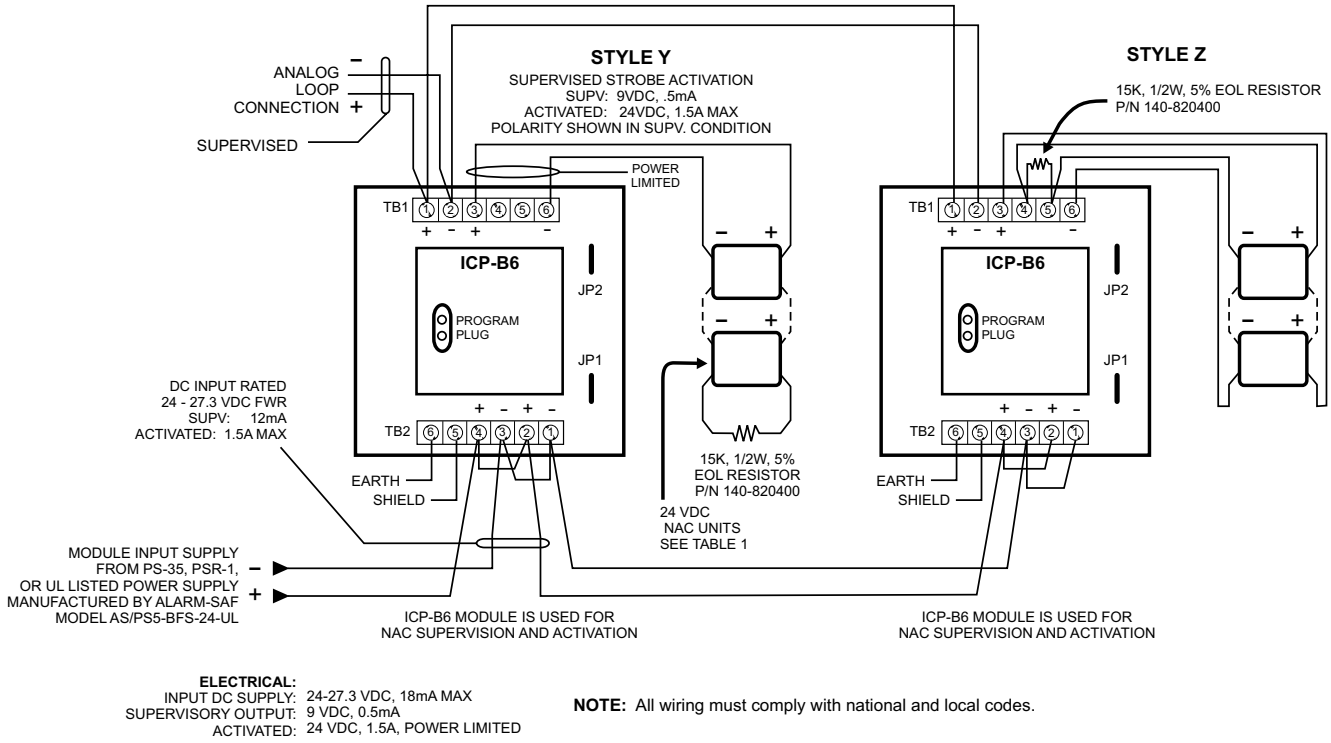


**ICP-B6 Used as a Strobe Module**



Technical Manuals Online! - http://www.tech-man.com

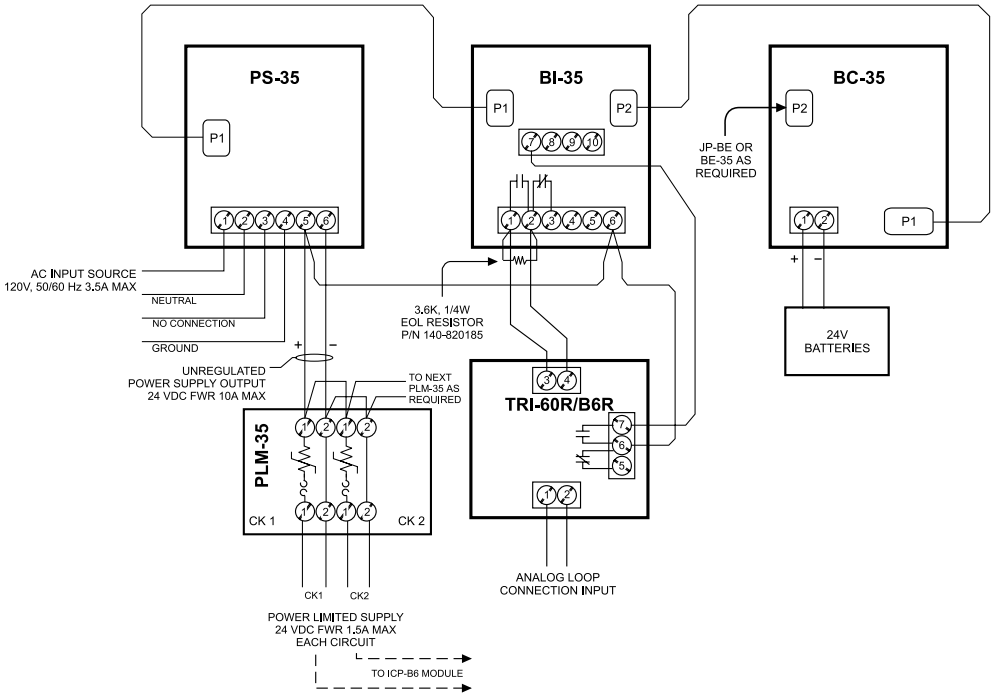


## ICP-B6 Wiring Using TRI-60/B6

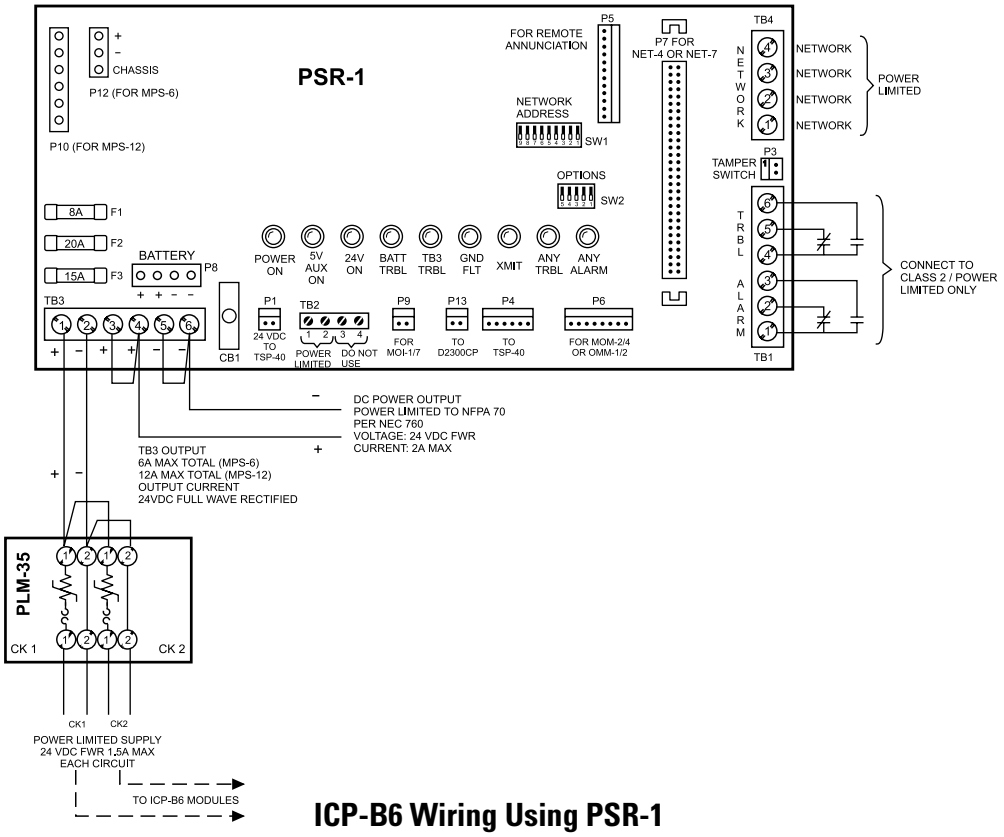


## ICP-B6 Wiring Using PSR-1



Technical Manuals Online! - http://www.tech-man.com

**2. Using the ICP-B6 as a Telephone Zone**

When the ICP-B6 is used as a telephone zone module, the 24 VDC provides supervision, trouble, and call-in conditions. If the 24 VDC is lost, the trouble condition INPUT DEVICE RESPONSE TOO LOW displays at the MXL/MXLV and an LED for that zone lights at a VSM-1 module.

The supervised telephone common talk riser starts at the TBM-2 module in the MME-3/MLE-6 backbox. The Class B shielded cable connects continuously to each ICP-B6 with a 5.6K end of line device. Tie the shield of these riser wires and the shield of the zone output wires together using terminal 5 of TB2 and **isolate them from the system circuits and the earth ground**.

Connect the supervised individual zone output connections from each ICP-B6 to the field telephone with shielded cable. Terminate them at the last station with a 10K ohm end of line resistor. As with the common talk line described in the paragraph above, be sure that **the shield is continuous and isolated from both system circuits and earth ground and that the shields are connected together using terminal 5 of TB2.**

**3. Using the ICP-B6 as a 70 Volt Speaker Zone**

When the ICP-B6 is used as a speaker zone, the 24 VDC provides the supervision. If the 24 volts is lost or there is an open or shorted speaker output line, the trouble condition INPUT DEVICE RESPONSE TOO LOW displays at the MXL/MXLV and the related zone LED on a VSM-1 lights.

The 70.7V RMS audio input comes from the amplifier via the ASC-2 Amplifier Supervision card. The ASC-2 supervises the audio connection path to the ICP-B6 and provides up to 100 watts of power. The ASC-2 can be used as Style Y (Class B) or Style Z (Class A). Refer to the *ASC-2 Instructions,* P/N 315-092085.

When the ICP-B6 is used as a speaker zone, the output speaker lines are supervised and power limited. The audio output cannot exceed 25 watts. Connect the speaker output as either Style Y (Class B) or Style Z (Class A). The graph on page 4-37 gives the approximate decibel loss for the total speaker zone wire length for various wire gauge sizes.

When using the ICP-B6 as a 70.7V RMS speaker zone, cut the JP1 jumper.



Technical Manuals Online! - http://www.tech-man.com

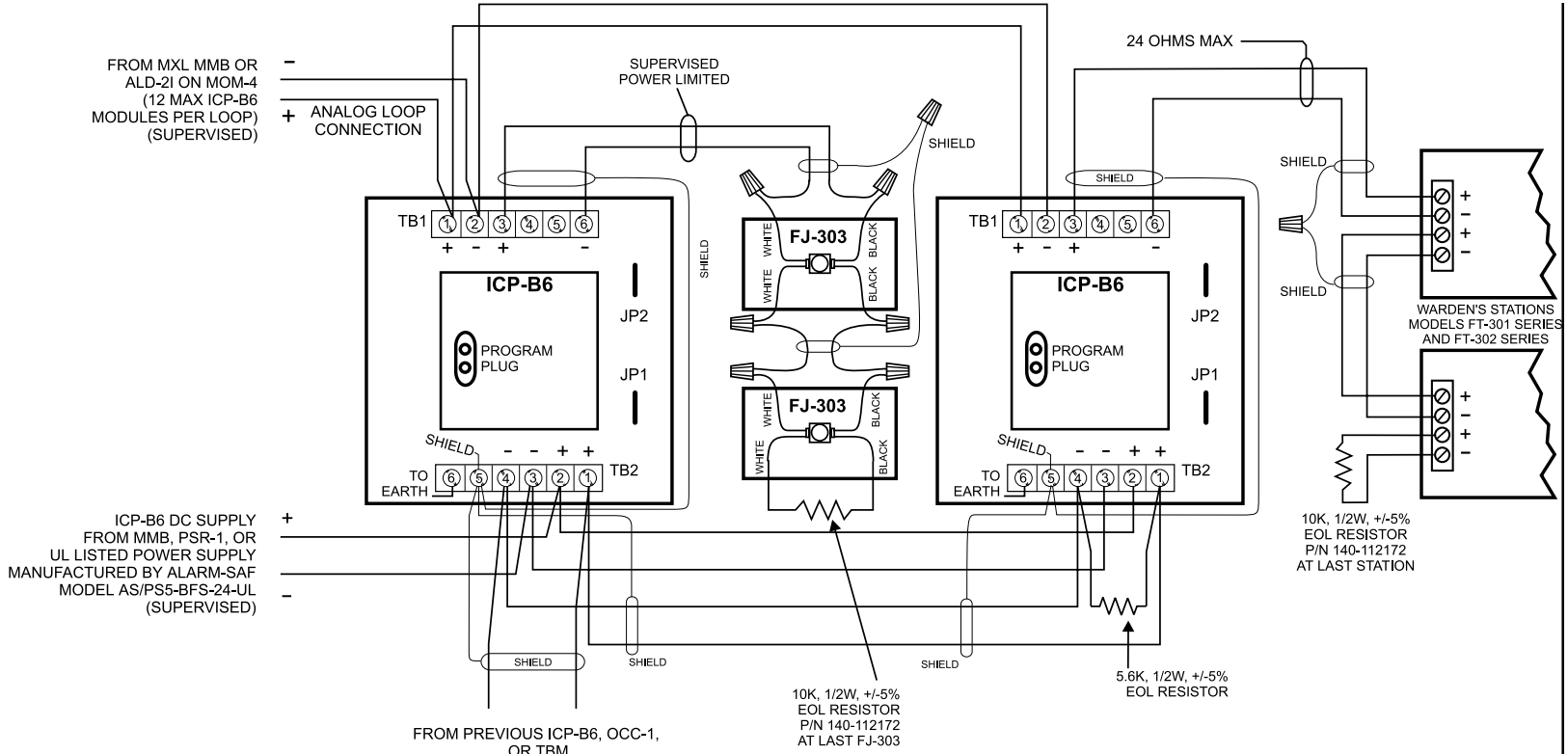


**RISER**
NOMINAL VOLTAGE: 17.5 VDC
MAXIMUM CURRENT: 175 mA

NOTES

1. All wiring must conform to local codes and to the authority having jurisdiction over the installation.
2. The shield on the common talk riser must be continuous and connected only to DC common at the TBM.
3. Each FJ303 has a factory installed 10K EOL resistor. This must be removed from all but the last FJ303 on each loop.

**NOTES:**

1. THE SHIELD ON THE COMMON TALK LINE MUST BE CONTINUOUS AND CONNECTED ONLY TO DC COMMON AT CONTROL PANEL.
2. **ALL WIRING MUST CONFORM TO NATIONAL AND LOCAL CODES.**

**ELECTRICAL:**
INPUT DC SUPPLY: 20.5 TO 30 VDC, 18mA MAX
SUPERVISORY OUTPUT: 8V, .8mA
ACTIVATED OUTPUT: 11V, 70mA

## ICP-B6 Used as a Telephone Zone



Technical Manuals Online! - http://www.tech-man.com

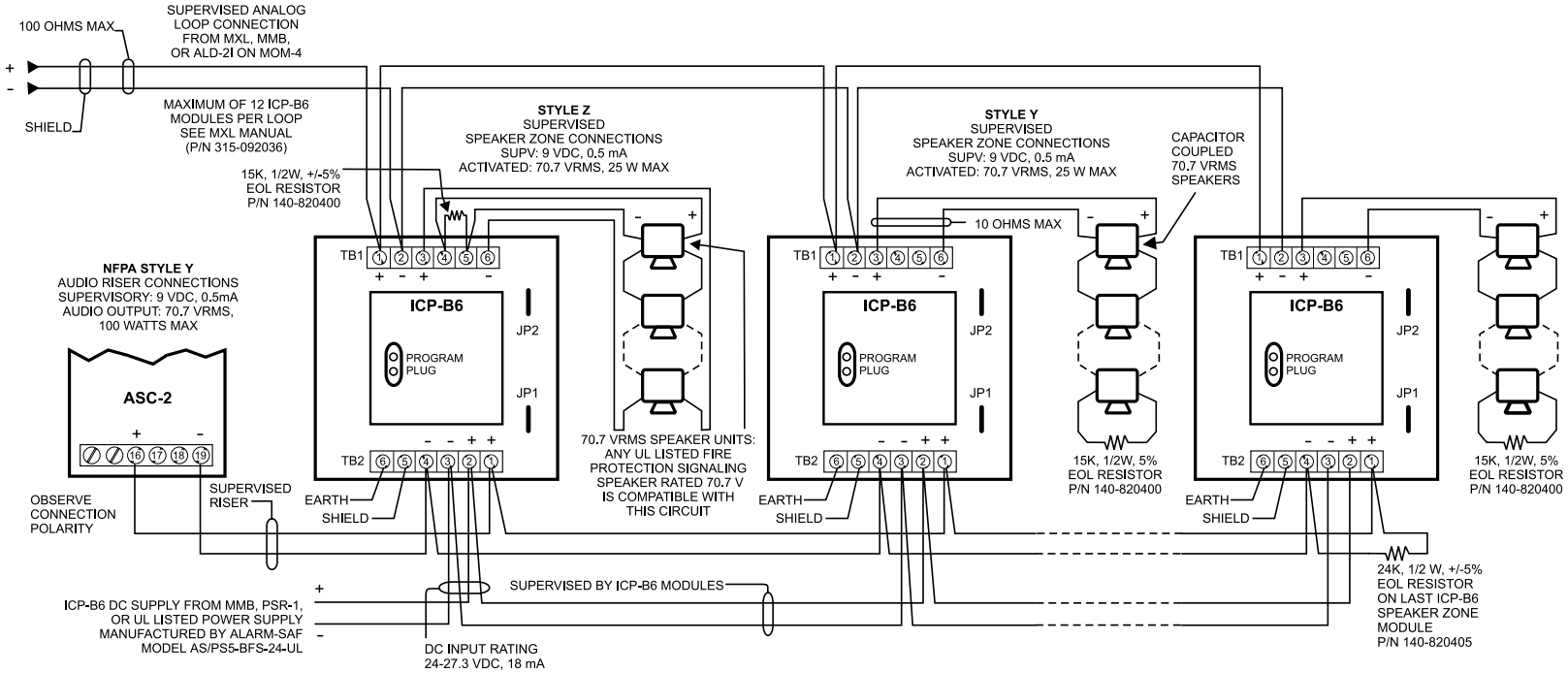


**All wiring must comply with national and local codes.**

**ELECTRICAL:**

| | |
|---|---|
| INPUT DC SUPPLY: | 24-27.3 VDC, 18mA MAX |
| SUPERVISORY OUTPUT: | 9 VDC MAX, 0.5mA |
| ACTIVATED OUTPUT: | 70.7 V, 25 WATTS MAX |

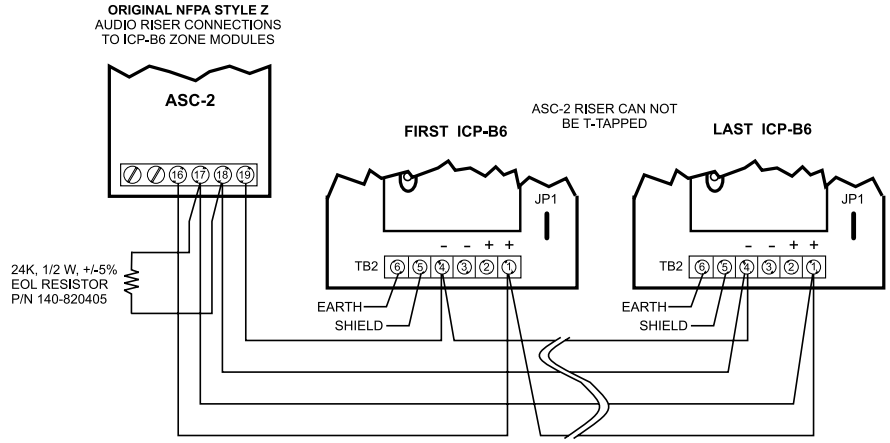


## ICP-B6 Used as a 70.7V Speaker Zone



Technical Manuals Online! - http://www.tech-man.com

**4. Using the ICP-B6 as a 25 Volt Speaker Zone**

When the ICP-B6 is used as a speaker zone, the 24 VDC provides the supervision. If the 24 volts is lost or there is an open or shorted speaker output line, the trouble condition INPUT DEVICE RESPONSE TOO LOW displays at the MXLV and the related zone LED on the VSM-1 lights.

The 25V RMS audio input comes from the amplifier via the ASC-2 Amplifier Spervision card. The ASC-2 supervises the audio connection path to the ICP-B6 and provides up to 100 watts of power. The ASC-2 can be used as Style Y (Class B) or Style Z (Class A). Refer to the *ASC-2 Instructions,* P/N 315-092085.

When the ICP-B6 is used as a speaker zone, the output speaker lines are supervised and power limited. The audio output cannot exceed 35 watts. Connect the speaker output as either Style Y (Class B) or Style Z (Class A). The graph gives the approximate decibel loss for the total speaker zone wire length for various wire gauge sizes.

When using the ICP-B6 as a 25V RMS speaker zone, cut the JP2 jumper.

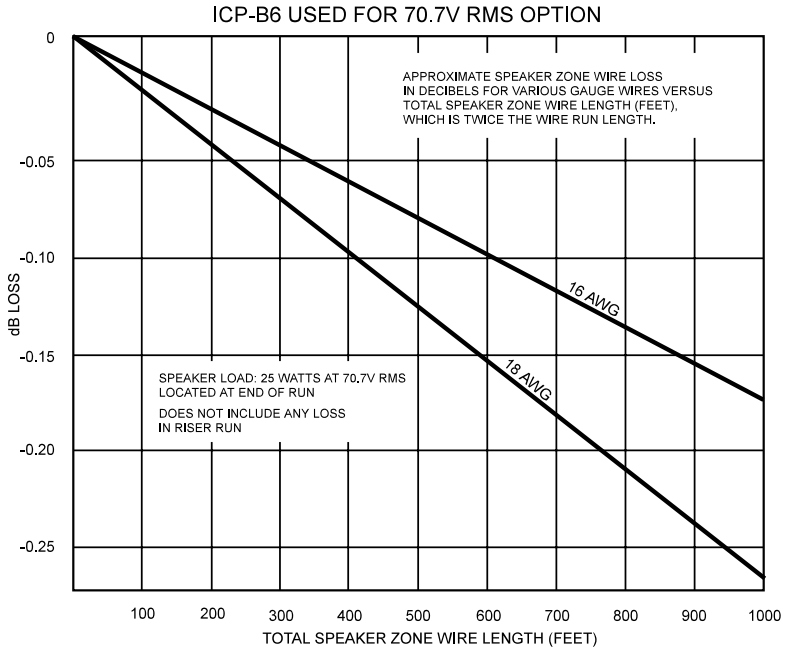


**Approximate Speaker Zone Wire Loss with the 70.7V Option**

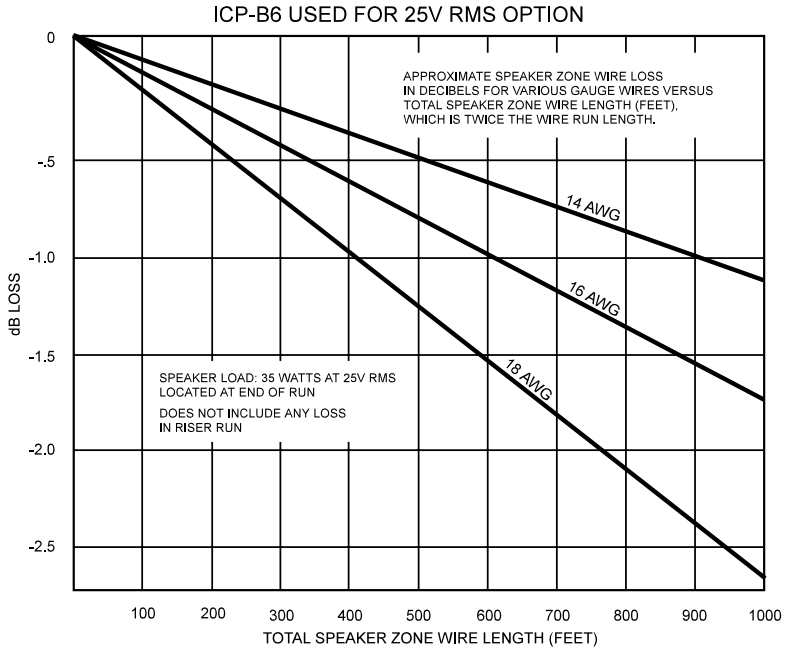


**Approximate Speaker Zone Wire Loss with the 25V Option**



Technical Manuals Online! - http://www.tech-man.com

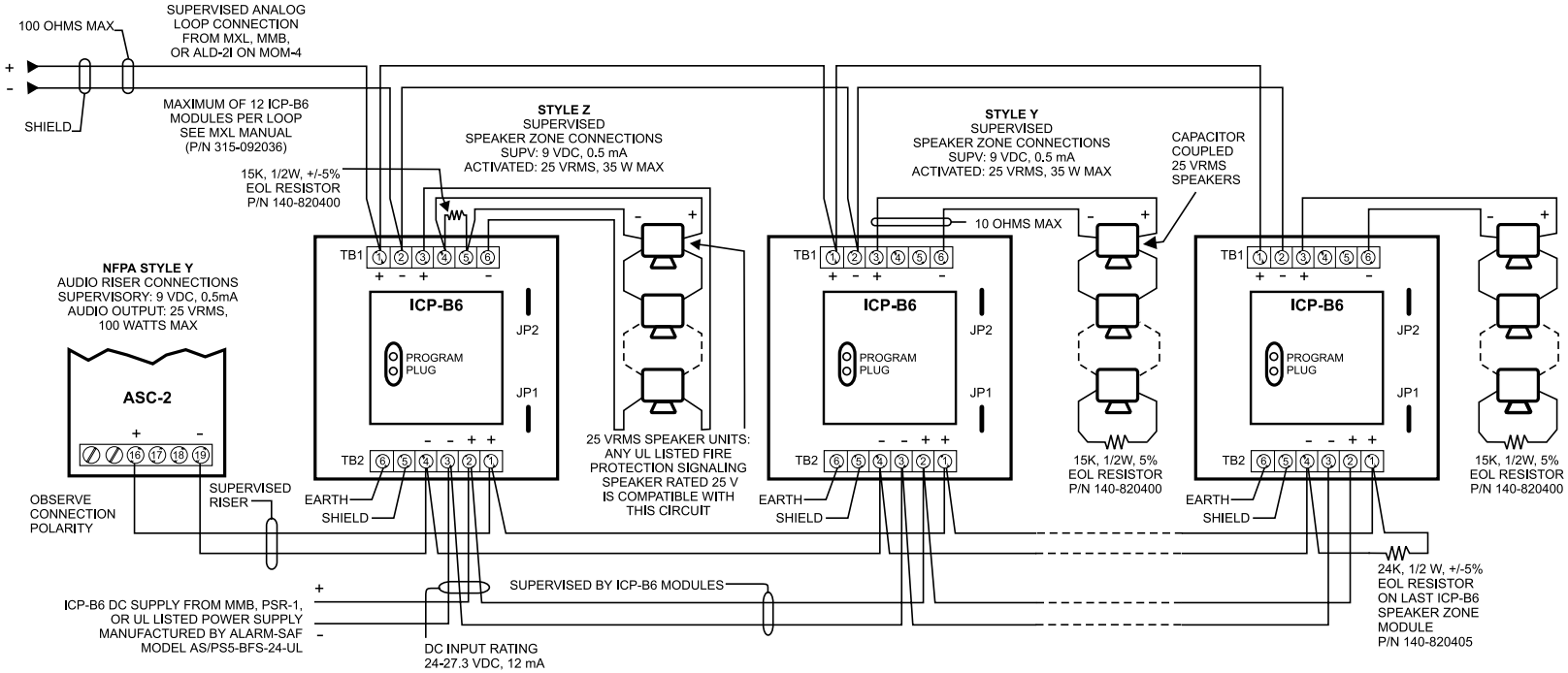


**All wiring must comply with national and local codes.**

**ELECTRICAL:**

| | |
|---|---|
| INPUT DC SUPPLY: | 24-27.3 VDC, 18mA MAX |
| SUPERVISORY OUTPUT: | 9 VDC MAX, 0.5mA MAX |
| ACTIVATED OUTPUT: | 25 V, 35 WATTS MAX |

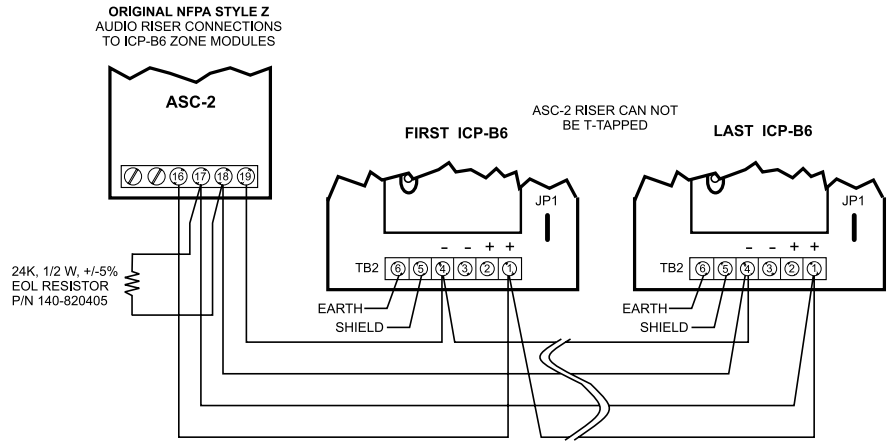


## ICP-B6 Used as a 25V Speaker Zone



Technical Manuals Online! - http://www.tech-man.com

# MMB-2 Connections and Ratings

## INTERNAL WIRING

To complete the MMB-2 internal wiring connections, follow the steps below, skipping those that do not apply to your particular MXL System.

### Main power connections

Primary power for the MMB-2 is provided by the MPS-6/6W or MPS-12/12W. Both of these mount in the lower right-hand corner of the MXL enclosure. Follow the instructions below for the appropriate power supply.

***MPS-6/6W-*** Install the MPS-6/6W (See MPS-6/6W Instructions, P/N 315-090334/W). With the AC mains disconnected, connect the MPS-6/6W power cable to P1 of the MMB-2. **Be sure that the jumper assembly is installed in P14 of the MMB-2. If this jumper is not installed, the MMB-2 will detect a permanent AC fail or indicate auxiliary power voltage is low.**

***MPS-12/12W -*** Install the MPS-12/12W (See MPS-12/12W Instructions, P/N 315-092030/W). Remove and discard the jumper assembly installed in P14 of the MMB-2. Disconnect the AC mains. Connect the MPS-12/12W power cable to P14 of MMB-2.

### Battery power connection

The MMB-2 kit includes a battery cable (wiring harness). Use the harness to connect the 24V backup batteries to P2 of MMB-2.

### MOM-4 optional module card cage

There are two connections between the MMB-2 and the MOM-4 board.

1. **24V power connection.**
P3 provides backward compatibility with the MMB-1 and should only be used when replacing an MMB-1. P3 is limited to 2 amps. The MMB-2 allows the use of either an MPS-6/6W or an MPS-12/12W. TB1 terminals 4 and 5 supply 24V to the MOM-4 with a maximum of 6 amps (MPS-6/6W) or 12 amps (MPS-12/12W) available. This output must be derated by the total current drawn from NAC1 (1.5A max), NAC2 (1.5A max) and the CZM-1B6 power (1A max) on the MMB-2. Connect TB1, 4 and 5 on the MMB-2 to TB6/TB7, 1 and 2 on the MOM 4.

2. **5V power and the communication interface.** Connect the 8-wire ribbon cable from P7/P10 on the MOM-4 to P6 on the MMB-2.



Technical Manuals Online! - http://www.tech-man.com

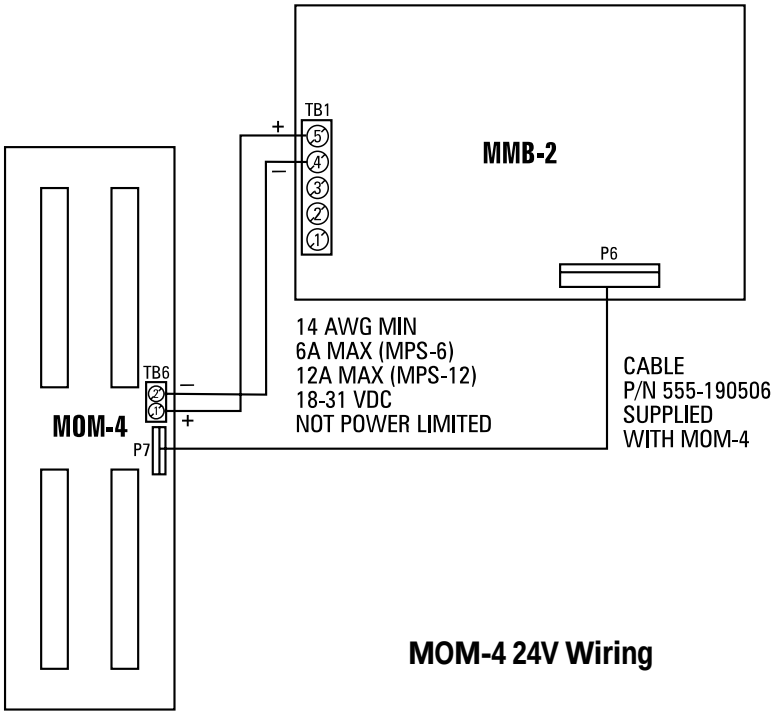


**MOM-4 24V Wiring**

# FIELD WIRING

The screw terminals for the field wiring circuits are located on the left and right sides of the MMB-2. They are labeled TB1 through TB5.

The field wiring circuits available are:

- CZM-1B6 power
- Analog device loop 1
- Analog device loop 2
- Notification appliance circuit 1
- Notification appliance circuit 2
- Common alarm relay
- Common supervisory relay
- Common trouble relay
- Style 4 RS-485 Network (MNET)

The following sections describe each circuit type and give the related instructions. Refer also to the wiring diagrams.

## CZM-1B6 power

Auxiliary power is available on TB5, terminals 9 through 12. The circuit is power limited per NEC Article 760 and is rated at 1 amp, 18-31 VDC.

This power supply is for use with the CZM-1B6 Remote Conventional Zone module.

You may connect a maximum of 20 CZM-1B6s to this power source.

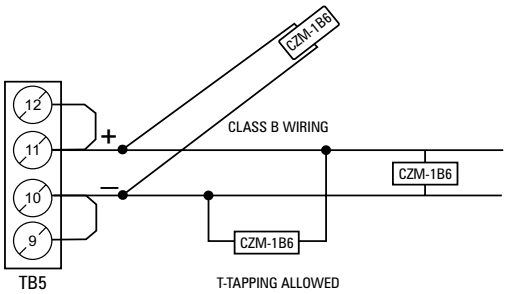


Class B wiring can be used to obtain the maximum of 20 CZM-1B6s. Each Class B wire run can support a maximum of 20 CZM-1B6s, 4 ohms total. Multiple Class B power connections can be used provided you do not exceed the rating above (20 CZM-1B6s max and 4 ohms per run max). For example, you could have four individual Class B power runs, for a total of 20 devices (6, 4, 3, and 7 CZM-1B6s), each of the four runs not exceeding 4 ohms total.

**CZM-1B6 Supervised Auxiliary Power Class B Wiring**

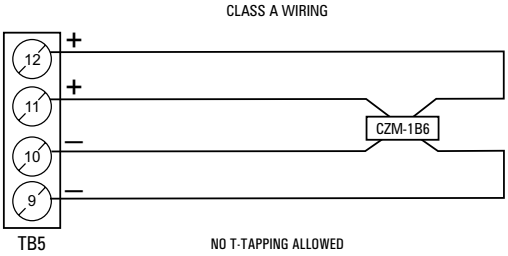


Class A wiring can support a maximum of 20 CZM-1B6s, wire resistance 4 ohms total.

**CZM-1B6 Supervised Auxiliary Power Class A Wiring**



Technical Manuals Online! - http://www.tech-man.com

## Analog device loops 1 and 2 (TB2 and TB3)

To install a device for Class B, refer to the wiring diagram below and the electrical ratings.

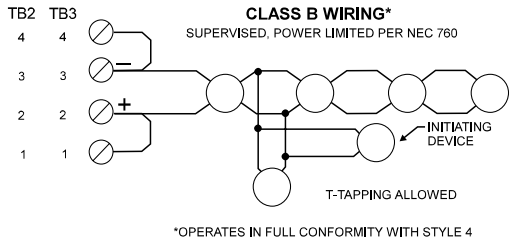


**Wiring the Analog Loops Class B Wiring**

To install a device for Class A, refer to the wiring diagram below and the electrical ratings.

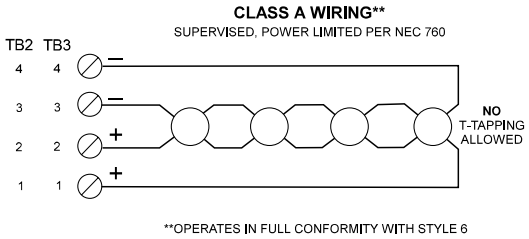


**Wiring the Analog Loops Class A Wiring**

**Analog loop electrical ratings:**

| | |
|---|---|
| Supervisory | 30 VDC peak<br>66mA max |
| Alarm | 30 VDC peak<br>66mA max<br>(60 devices in alarm) |

All wiring must be in accordance with Article 760 of NEC and the local building codes.

Only the devices listed in **Appendix A, Table 2 - Analog Addressable Detectors** on page A-1 may be used. The UL identifiers for compatibility are the same as the model names specified.

NOTES

1. Power limited to NFPA 70 per NEC 760.
2. Each detector or group of detectors requires the following:
   - a 2-wire circuit of 18 AWG minimum thermoplastic fixture wire enclosed in a conduit.

     *or*
   - 18 AWG limited-energy shielded cable without conduit, if permitted by local building codes.
3. Maximum resistance: 100 ohms total.
4. Maximum capacitance: 0.4µF between + loop and – loop. 0.8µF between + loop and chassis. 0.8µF between – loop and chassis.
5. Refer to Wiring Guide for compatible wire types.
6. Maximum voltage: Supervisory 30 VDC peak. Alarm 30 VDC peak.
7. Maximum current: Supervisory 66mA Alarm 66mA
8. No end of line device required.
9. Operates in full conformance with Style 4.
10. Operates in full conformance with Style 6.
11. Either loop may be wired Class A or B.
12. 60 devices maximum per loop.
13. T-tapping is NOT allowed on Class A loops.
14. Both circuits are supervised.



Technical Manuals Online! - http://www.tech-man.com

## Notification appliance circuits (TB5, 1-4 and TB5, 5-8)

These circuits are for notification appliances only, NFPA 72 Local. For NFPA 72 Municipal Tie or NFPA 72 Leased Line, use the Model CSM-4.

All wiring must be in accordance with Article 760 of NEC and local building codes.

NOTES
1. Power limited to NFPA 70 per NEC 760.
2. Minimum wire size: 18 AWG.
3. Maximum resistance: 3 ohms total.
4. End of line device: 2.2K, ½W, P/N 140-820380.
5. Either circuit may be wired Class A or B.
6. Both circuits are supervised.
7. Polarity shown in supervisory state.

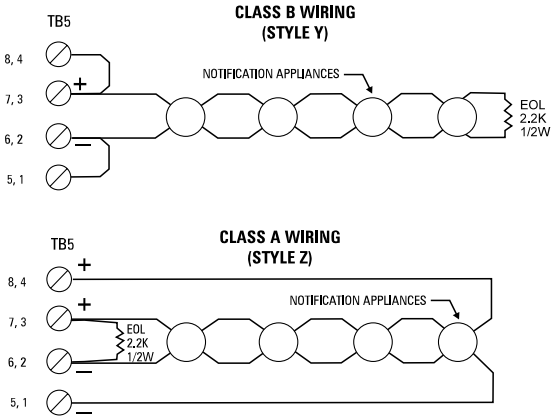


**Notification Appliance Circuits Wiring**

**Electrical ratings:**

| | |
|---|---|
| Supervisory | 24V unfiltered, full wave rectified 12mA max |
| Alarm | 24V unfiltered, full wave rectified 1.5A max |

Only the devices listed in **Compatible Notification Appliances**, P/N 315-096363 may be used. The UL identifiers for compatibility are the same as the model names specified.

## Common Alarm Relay

The common alarm relay changes state whenever a fire alarm is detected.

## Common Supervisory Relay

The supervisory relay changes state whenever a supervisory condition is detected. It may be used for alternate functions if programmed by CSG-M for them.

## Common Trouble Relay

The trouble relay changes state whenever a System trouble is detected.

NOTES
1. Contact rating: 2A, 30 VDC/120 VAC resistive.
2. Use only with power limited / Class 2 circuits.
3. Coils are supervised when de-energized.
4. Contacts are not supervised.
5. All relay contacts are shown in normal state.

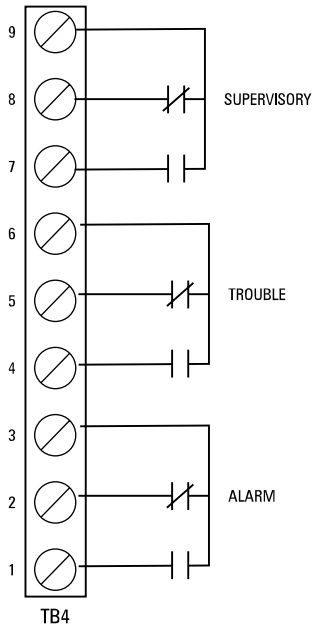


**MMB-2 Relay Wiring**



Technical Manuals Online! - http://www.tech-man.com

## Style 4 Network (MNET)

The MMB-2 provides a Style 4 MNET network for connection to remote power supplies (PSR-1) and annunciators (MOI-1/7, RCC-1/1F). If a Style 7 network is required, a NET-7 must be used. Refer to the NET-7 Installation Instructions, P/N 315-091914, for wiring diagrams.

NOTES
1. Power limited to NFPA 70 per NEC 760.
2. Minimum wire size: 18 AWG.
3. Maximum resistance: 80 ohms total.
4. Use twisted pair or shielded twisted pair.
5. Terminate the shield ONLY at the MMB-2 chassis.
6. Maximum voltage: 8V P-P.
7. Maximum current: 150mA.

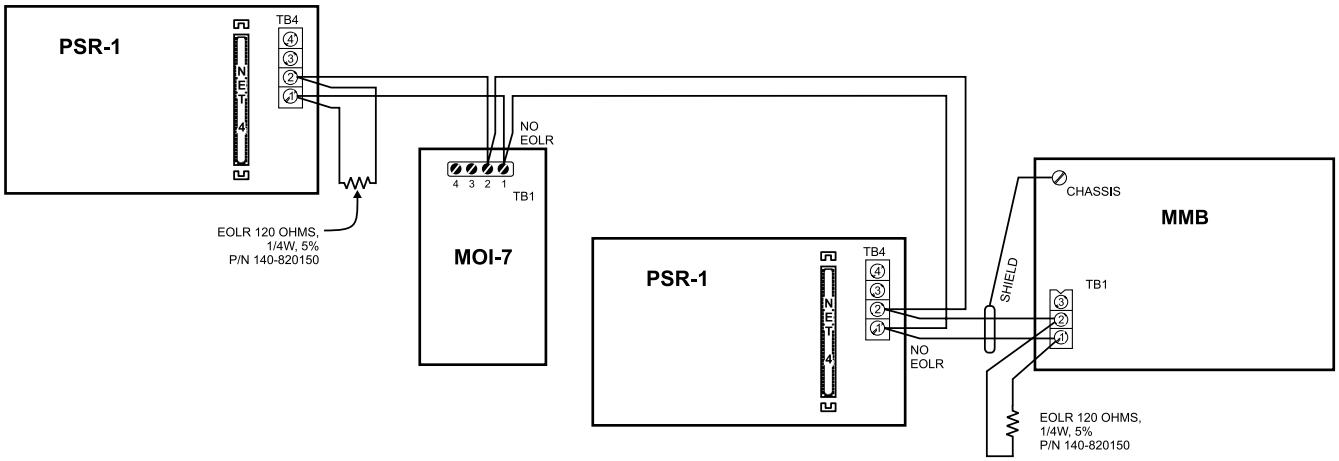


**Style 4 Network (MNET) Wiring**

## MMB-2 Fuses

NOTE: The fuses are located on the upper left and right corners of the MMB-2 board.

### FUSE RATINGS

| | | |
|---|---|---|
| F1 | MPS-6 Input | 8A, 3 AG, Normal Blow |
| F2 | Battery Reversal | 20A, 3 AG, Normal Blow |
| F3 | CZM-1B6 Power | 2A, 3 AG, Normal Blow |
| F4 | 24V Output (TB1 - 4 and 5) | 15A, 3 AG, Normal Blow |



Technical Manuals Online! - http://www.tech-man.com

Technical Manuals Online! - http://www.tech-man.com

# MOI-7, MOD-16, MID-16 Connections and Ratings

## MOI-7

**Electrical ratings:**

| | |
|---|---|
| Supervisory | 5V ± .5V<br>140mA |
| Alarm | 5V ± .5V<br>180mA |

**Electrical connections**

The MOI-7 is shipped with one cable as described below.

**5V Power**

The MOI-7 receives its 5 volt power on connector P1. This power can be sent to other modules requiring 5 volts from P2. Pin 1 is the positive input; pin 2 the return. Use the supplied cable, P/N 600-291261.

**MXL Network Connection**

The MOI-7 can be connected to the MXL network in three ways.

***The first connection*** is for Style 4. For Style 4 wiring use only terminals 1 and 2 of TB1; terminals 3 and 4 of TB1 are not used. In a Style 4 network, make only Network A connections and ignore all Network B connections. **Do not use connector P5 in this configuration.**

***The second connection*** allows the MOI-7 to connect directly to a Style 7 network. This connection is called a Remote Style 7. In this configuration all the terminals of TB1 are used. Install the MOI-7 at any point along the Style 7 network **except** at either end. The Style 7 network **must** terminate on a NET-7 module to insure proper supervision of the network. Each MOI-7 connected directly to the network wiring occupies one of the 32 network nodes. **Do not use connector P5 in this configuration.**

***The third connection*** is also Style 7. This connection is called a Local Style 7 and its advantage is that it does not use up a network node. In this configuration the MOI-7 communicates through the NET-7 installed in the enclosure. In order for the MOI-7 to use the NET-7, it must connect to the 8-wire ribbon cable on either the MMB-1/-2 or the PSR-1 through connector P5. This limits the distance an MOI-7 can be located from the MMB-1/-2 or the PSR-1. An eight foot cable (MER-8, P/N 500-694147) is available for this purpose. The MOI-7 must be located in a close nippled



Technical Manuals Online! - http://www.tech-man.com

enclosure. **Remove ICs U1 and U12 and make no connections to TB1.**

### 24V Return

TB2 connects to the return side of the power supply used with the MOD-16s and MID-16s. There are two positions on the TB2—position 1 connects to the MOD-16/MID-16 and position 2 to PSR-1, TB3-2, or to PS-35, terminal 6.

### MOD-16 and MID-16 Connection

P4 is the connector for the MOD-16/MID-16 modules. Connect the first MOD-16/MID-16 in the system using a 10-wire cable P/N 555-190940. Be sure that the locking tab on the cable engages the rib on P4.

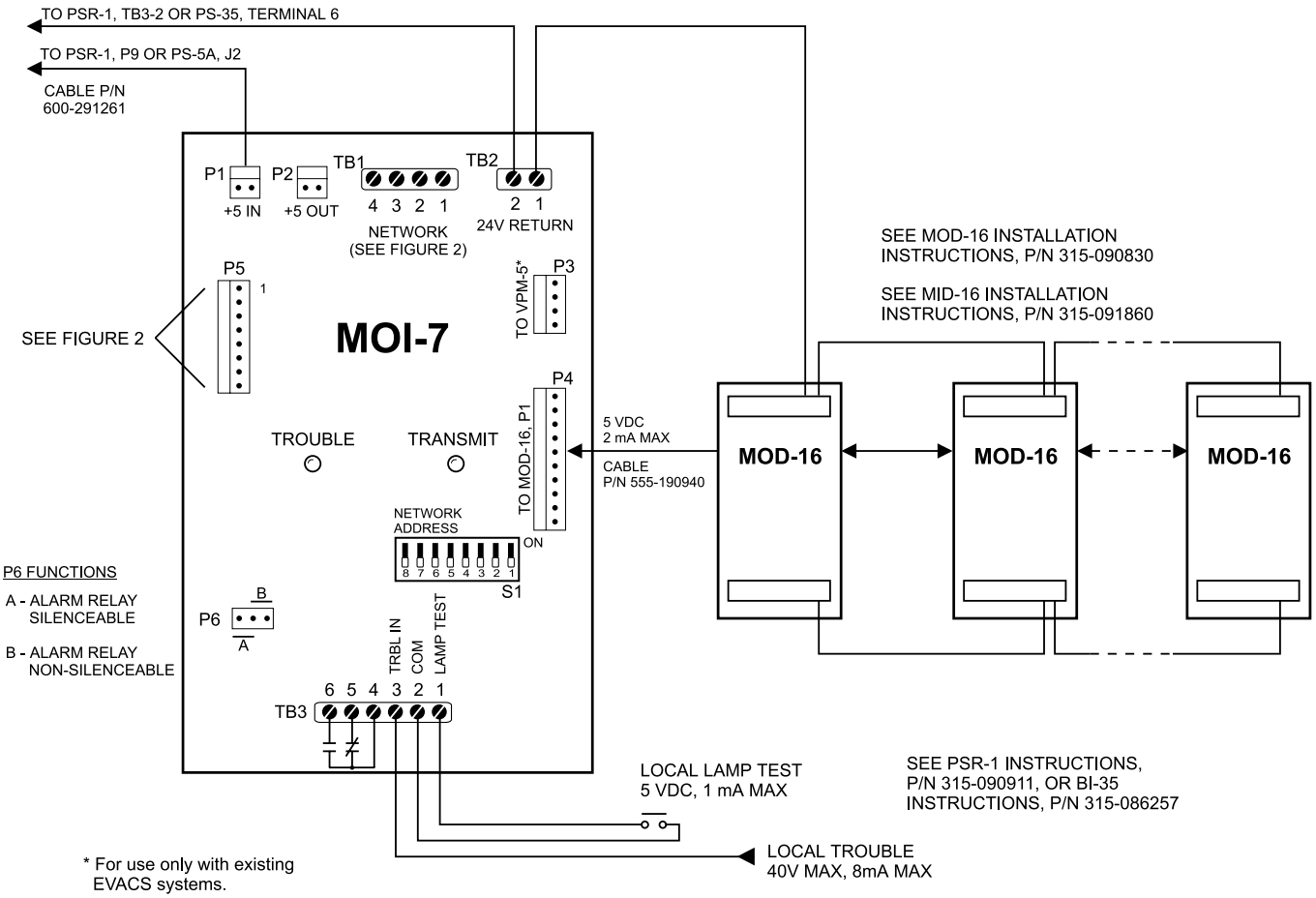


**MOD-16 and MID-16 Wiring (Figure 1)**



Technical Manuals Online! - http://www.tech-man.com

**Local Trouble Input**

When terminal 3 of TB3, the local trouble input, is driven high, it reports a trouble condition to the MXL. This input is protected and has a maximum input rating of 40V. Terminal 2 of TB3 is the common for this input.

**Local Lamp Test**

Terminal 1 of TB3 is used for a local lamp test. When this input is pulled low, the MOD-16 outputs do a lamp test. Use a normally open momentary switch connected between terminal 1 and 2 of TB3.

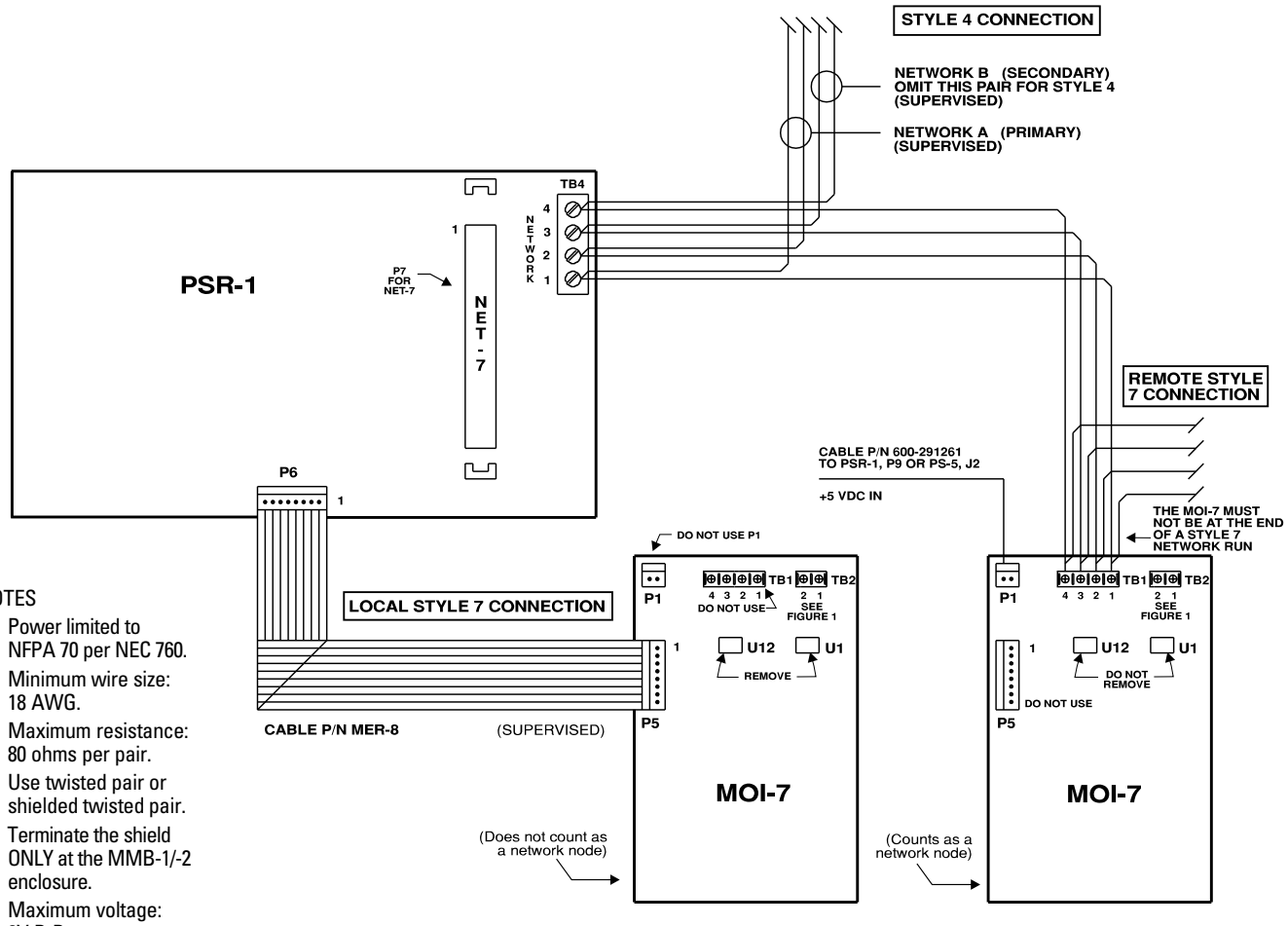


NOTES

1. Power limited to NFPA 70 per NEC 760.
2. Minimum wire size: 18 AWG.
3. Maximum resistance: 80 ohms per pair.
4. Use twisted pair or shielded twisted pair.
5. Terminate the shield ONLY at the MMB-1/-2 enclosure.
6. Maximum voltage: 8V P-P.
7. Maximum current: 150mA.
8. For Style 4 network omit all Network B connections and substitute NET-4 modules for NET-7s.
9. For Remote Style 7 connection, the MOI-7 must not be at the end of the network.

**MXL Network Wiring (Figure 2)**



Technical Manuals Online! - http://www.tech-man.com

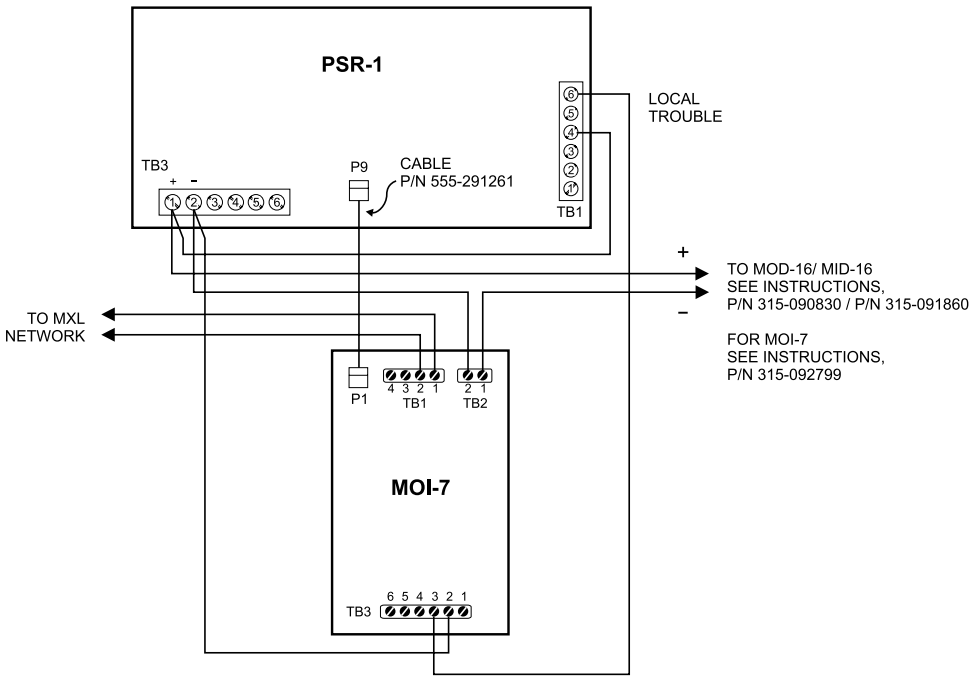


**MOI-7 Wiring in Same Enclosure (Figure 3)**

### MOI-7 Power

The PSR-1 may be used in stand-alone mode as the power supply for the MOI-7. In this configuration the MOI-7 and the PSR-1 must be in the same enclosure. A separate 5V output is provided for the MOI-7. The PSR-1 local trouble contact must also be connected as a means of reporting PSR-1 troubles to the MXL.

If the MOI-7 is in a separate enclosure, do not use the 5V power on P9. A separate PS-5A must be included in the remote enclosure with the MOI-7.

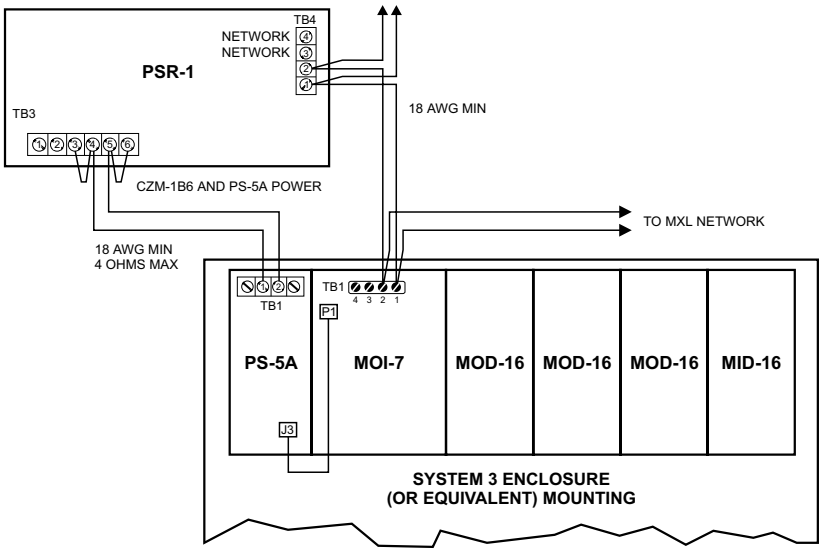


**MOI-7 Power Wiring (Figure 4)**



Technical Manuals Online! - http://www.tech-man.com

# MOD-16

**Electrical ratings:**

| | |
|---|---|
| Supervisory | 40V peak<br>2mA |
| Alarm | 40V peak<br>850mA |
| Maximum current for each output | 50mA |

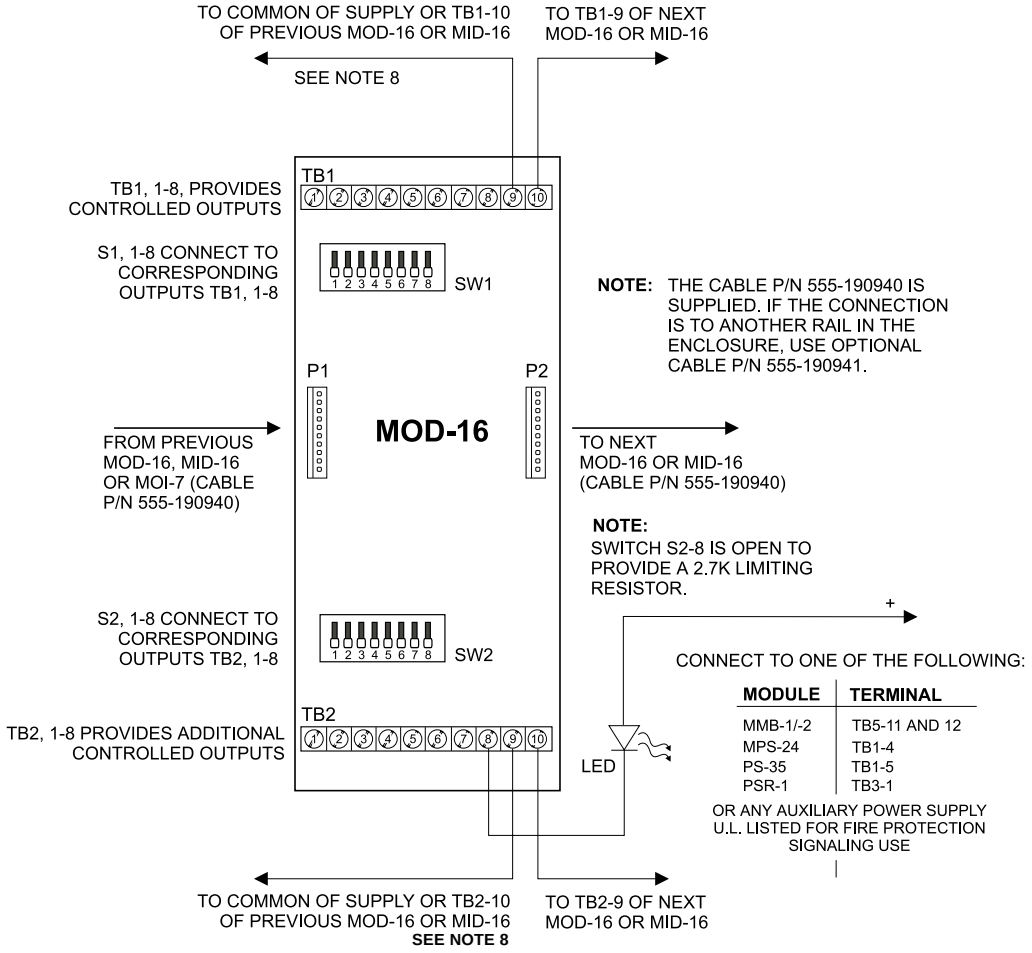


**MOD-16 Wiring**

NOTES

1. 18 AWG minimum for LED and 24V lamp connections.
2. 14 AWG minimum for supply connections (TB1-9 and 10, TB2-9 and 10).
3. All wiring must be in accordance with NEC 760.
4. All wiring must conform to local codes and to the authority having jurisdiction over the installation.
5. All wiring to MID-16, MOD-16, or MOI-7 (non-network) modules is unsupervised. Any wiring leaving the enclosure must be within 20 feet, in rigid conduit, and must not leave the room.
6. For additional information see MOI-7 Installation Instructions, P/N 315-092799.
7. A maximum of 8 MOD-16s can be used with the MOI-7.
8. Both TB1-9 (or 10) and TB2-9 (or 10) must be connected to the common of the power supply.



Technical Manuals Online! - http://www.tech-man.com

# MID-16

## Electrical ratings:

| | |
|---|---|
| Module power | 5VDC<br>2mA max |

## Input ratings:

| | |
|---|---|
| Input voltage range | 18-31 VDC |
| Input impedance | 8K ohms |
| Input current | 2mA max |

NOTES

1. 18 AWG minimum for all input connections.
2. 14 AWG minimum for supply connections (TB1-9 and 10, TB2-9 and 10).
3. All wiring must be in accordance with NEC 760.
4. All wiring must conform to local codes and to the authority having jurisdiction over the installation.
5. All wiring to MID-16, MOD-16, or MOI-7 (non-network) modules is unsupervised. Any wiring leaving the enclosure must be within 20 feet, in rigid conduit, and must not leave the room.
6. For additional information see MOI-7 Installation Instructions, P/N 315-092799
7. A maximum of 8 MID-16s can be used with the MOI-7.
8. P1 is connected in parallel with TB1.
9. P2 is connected in parallel with TB2.

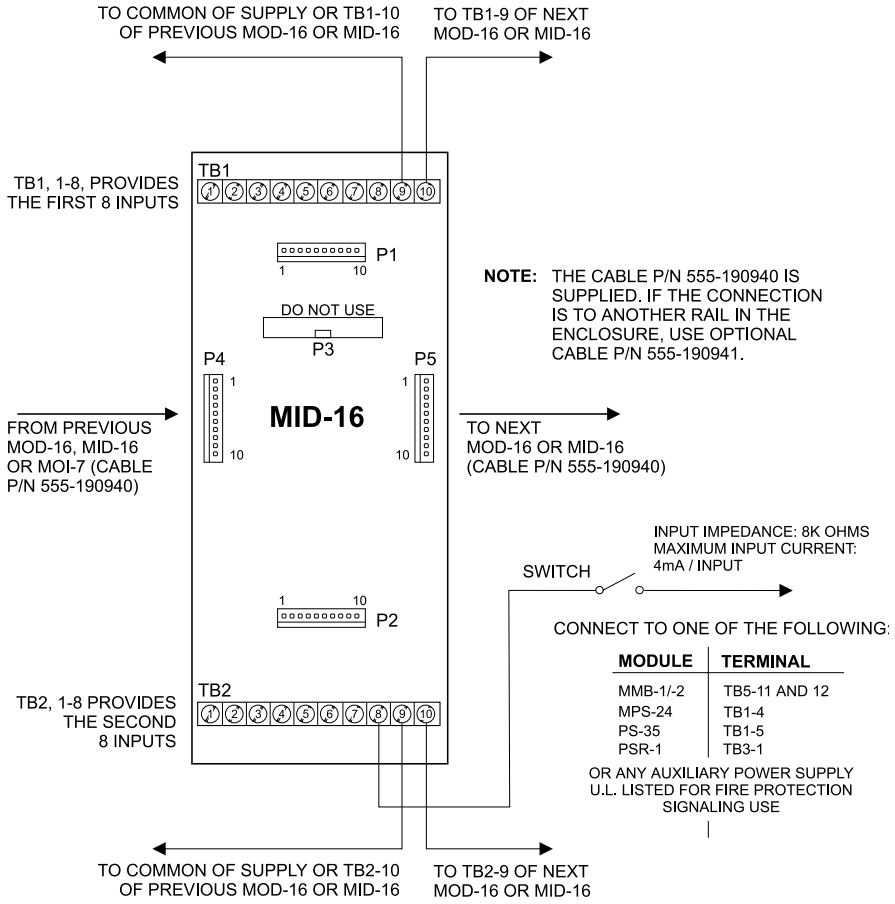


**MID-16 Wiring**



Technical Manuals Online! - http://www.tech-man.com

# MOM-2 Connections and Ratings

## Electrical Installation

There are two inputs that connect the MOM-2 with the MMB-1/-2 and PSR-1. These inputs provide all the necessary power and data lines to support the optional modules.

The first input is an 8-conductor ribbon cable. Attach the cable to P6 on the MMB-1/-2 or P6 on the PSR-1, making sure that the locking rib on the cable connector engages the locking tab on P6. Attach the other end of the cable to P7/P10 on the MOM-2, again making sure that the locking rib on the cable engages the locking tab on P7/P10. This cable supplies 5 VDC and communication between the MMB-1/-2, PSR-1 and the modules installed in the MOM-2.

The second input feeds 24 VDC full wave unfiltered DC to the MOM-2. This input is connected to either P5/P8 (MMB-1 only) or TB6/TB7. A 2-wire cable is provided for backward compatibility with the MMB-1. Connect one end of the cable to P3 on the MMB-1, making sure the cable rib and board tab lock. Attach the other end of the cable to P5/P8 on the MOM-2 in the same way. The MMB-1 limits this power input to 2 amps. Under maximum load conditions the optional modules must never draw more than 2 amps from this connection.

When the 24 VDC is provided by either the MMB-2 or the PSR-1 use TB6/TB7 on the MOM-2 to connect the power. The wire for this connection is not supplied (See *MMB-2 Installation Instructions*, P/N 315-095097 or *PSR-1 Installation Instructions*, P/N 315-090911 for terminal connections). Use the following chart to determine the available 24 VDC current.

**MAXIMUM MODULE LOAD CURRENTS**

| Source | Max. Current |
|---|---|
| MMB-2 with MPS-6/6W | 6 * |
| MMB-2 with MPS-12/12W | 12 * |
| PSR-1 with MPS-6/6W | 6 ** |
| PSR-1 with MPS-12/12W | 12 ** |

* Derate by the total of CZM-1B6 power, NAC-1 and NAC-2

** Derate by the total of CZM-1B6 power



Technical Manuals Online! - http://www.tech-man.com

Determine which optional plug-in modules are used in your CSG-M configuration. Depending on the optional modules used, determine the outstanding power by using the table in **Appendix D - MXL Power Supply Load Calculations** on page D-2 (See the EXAMPLE). This power can be used for notification appliances or for the optional power connector on TB5.

**NOTE:** When a CSM-4 is used, you may add notification appliances to it if the maximum load current to the MOM-2 does not exceed 2 amps (MMB-1); or with a PSR-1/MMB-2, 6 amps (MPS-6/6W) or 12 amps (MPS-12/12W). Include the total alarm current on each CSM-4 notification appliance circuit when performing the calculations.

**EXAMPLE:**

With: one CZM-4 and
one CRM-4 and
one CSM-4

Total load current =
0.720 + 0.075 + 0.034 = 0.83A

**With MPS-6/6W:**

Remaining Available Current =
2.0 - 0.83 = 1.17A (MMB-1)
6.0 - 0.83 = 5.17A (PSR-1/MMB-2)
with no CZM-1B6 or PS-5A/-5N7 load

**With MPS-12/12W:**

Remaining Available Current =
2.0 - 0.83 = 1.17 (MMB-1)
12.0 - 0.83 = 11.17 (PSR-1/MMB-2)
with no CZM-1B6 or PS-5A/-5N7 load


Technical Manuals Online! - http://www.tech-man.com

# MOM-4 Connections and Ratings

## Electrical Installation

There are two inputs that connect the MOM-4 with the MMB-1/-2 and PSR-1. These inputs provide all the necessary power and data lines to support the optional modules.

The first input is an 8-conductor ribbon cable. Attach the cable to P6 on the MMB-1/-2 or P6 on the PSR-1, making sure that the locking rib on the cable connector engages the locking tab on P6. Attach the other end of the cable to P7/P10 on the MOM-4, again making sure that the locking rib on the cable engages the locking tab on P7/P10. This cable supplies 5 VDC and communication between the MMB-1/-2, PSR-1 and the modules installed in the MOM-4.

The second input feeds 24 VDC full wave unfiltered DC to the MOM-4. This input is connected to either P5/P8 (MMB-1 only) or TB6/TB7. A 2-wire cable is provided for backward compatibility with the MMB-1. Connect one end of the cable to P3 on the MMB-1, making sure the cable rib and board tab lock. Attach the other end of the cable to P5/P8 on the MOM-4 in the same way. The MMB-1 limits this power input to 2 amps. Under maximum load conditions the optional modules must never draw more than 2 amps from this connection.

When the 24 VDC is provided by either the MMB-2 or the PSR-1 use TB6/TB7 on the MOM-4 to connect the power. The wire for this connection is not supplied (See *MMB-2 Installation Instructions*, P/N 315-095097 or *PSR-1 Installation Instructions*, P/N 315-090911 for terminal connections). Use the following chart to determine the available 24 VDC current.

**MAXIMUM MODULE LOAD CURRENTS**

| Source | Max. Current |
|---|---|
| MMB-2 with MPS-6/6W | 6 * |
| MMB-2 with MPS-12/12W | 12 * |
| PSR-1 with MPS-6/6W | 6 ** |
| PSR-1 with MPS-12/12W | 12 ** |

* Derate by the total of CZM-1B6 power, NAC-1 and NAC-2

** Derate by the total of CZM-1B6 power



Technical Manuals Online! - http://www.tech-man.com

Determine which optional plug-in modules are used in your CSG-M configuration. Depending on the optional modules used, determine the outstanding power by using the table in **Appendix D - MXL Power Supply Load Calculations** on page D-2. (See the EXAMPLE). This power can be used for notification appliances or for the optional power connector on TB5.

**NOTE:** When a CSM-4 is used, you may add notification appliances to it if the maximum load current to the MOM-4 does not exceed 2 amps (MMB-1); or with a PSR-1/MMB-2, 6 amps (MPS-6/6W) or 12 amps (MPS-12/12W). Include the total alarm current on each CSM-4 notification appliance circuit when performing the calculations.

**EXAMPLE:**

With: one CZM-4 and
one CRM-4 and
one CSM-4

Total load current =
0.720 + 0.075 + 0.034 = 0.83A

**With MPS-6/6W:**

Remaining Available Current =
2.0 - 0.83 = 1.17A (MMB-1)
6.0 - 0.83 = 5.17A (PSR-1/MMB-2)
with no CZM-1B6 or PS-5A/-5N7 load

**With MPS-12/12W:**

Remaining Available Current =
2.0 - 0.83 = 1.17 (MMB-1)
12.0 - 0.83 = 11.17 (PSR-1/MMB-2)
with no CZM-1B6 or PS-5A/-5N7 load


Technical Manuals Online! - http://www.tech-man.com

# NIM-1R Connections and Ratings

**Electrical ratings:**
5 VDC, 160mA

For battery calculations, the NIM-1R draws 70mA from 24 VDC.

## NIM-1R Network

Up to 32 MXL Systems can be connected in the network with an NIM-1R installed in each MXL System. For the highest level of fault protection, install the NIM-1R in the enclosure with the MMB-1/-2, although this is not necessary. When connecting more than 32 MXL Systems, a REP-1/D2300CP repeater is required. Refer to the *REP-1 Installation Instructions*, P/N 315-092686 or the *D2300CP Installation Instructions*, P/N 315-092882, for the wiring diagram.

The network can be installed as either Style 4 or Style 7. Style 7 is required in Canada.

Each NIM-1R is shipped with two 120 ohm EOLRs—only two are required for each network pair. Install an EOLR at the ends of each network pair. Do not install an EOLR at each NIM-1R. (For a simple rule of thumb, an EOLR must be installed where only a single wire lands on a screw terminal.)

Do not T-tap the network wiring. If T-tapping is required, use the REP-1/D2300CP repeater. Refer to the

NOTES

1. Power limited to NFPA 70 per NEC 760.
2. Minimum wire size: 18 AWG.
3. Maximum resistance: 80 ohms per pair.
4. Use twisted pair or shielded twisted pair.
5. Terminate the shield ONLY at MXL panel 1.
6. Maximum voltage: 8V P-P.
7. Maximum current: 150mA.
8. For Style 4 omit all Network Pair B connections.
9. Do not use terminals 12 - 16 if NCC is not connected.

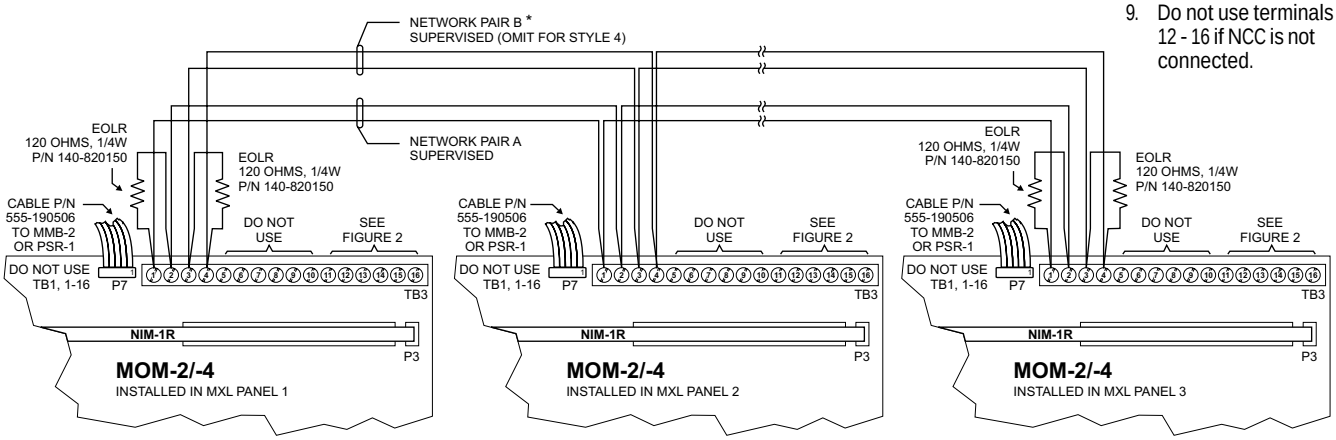


* REQUIRED IN CANADIAN INSTALLATIONS

**NIM-1R Network Wiring (Figure 1)**



Technical Manuals Online! - http://www.tech-man.com

*REP-1 Installation Instructions*, P/N 315-092686 or the *D2300CP Installation Instructions*, P/N 315-092882, for the wiring diagram. For Style 4 wiring, terminate the secondary network pair (terminals 3 and 4 ) on each NIM-1R with an EOLR.

## Network Command Center (NCC)

The RS-232 interface connects to the NCC with a 9-pin female D-SUB connector.

Observe the following restrictions:

- Give the NCC a panel number. (This panel number is in addition to the panel number for the MXL system that the NCC connects to.)
- The total number of panels in the network must not exceed 64, including the NCC.
- For NIM-1Rs that are not connected to an NCC, leave terminals 12–16 disconnected.

NOTES

1. Power limited to NFPA 70 per NEC 760.
2. Minimum wire size: 18 AWG.
3. Maximum cable length 25 feet.
4. Cable must be in rigid conduit and can not leave the room.
5. Shielded cable is not recommended.
6. Maximum voltage: 24V peak to peak.
7. Maximum current: 20mA per circuit.

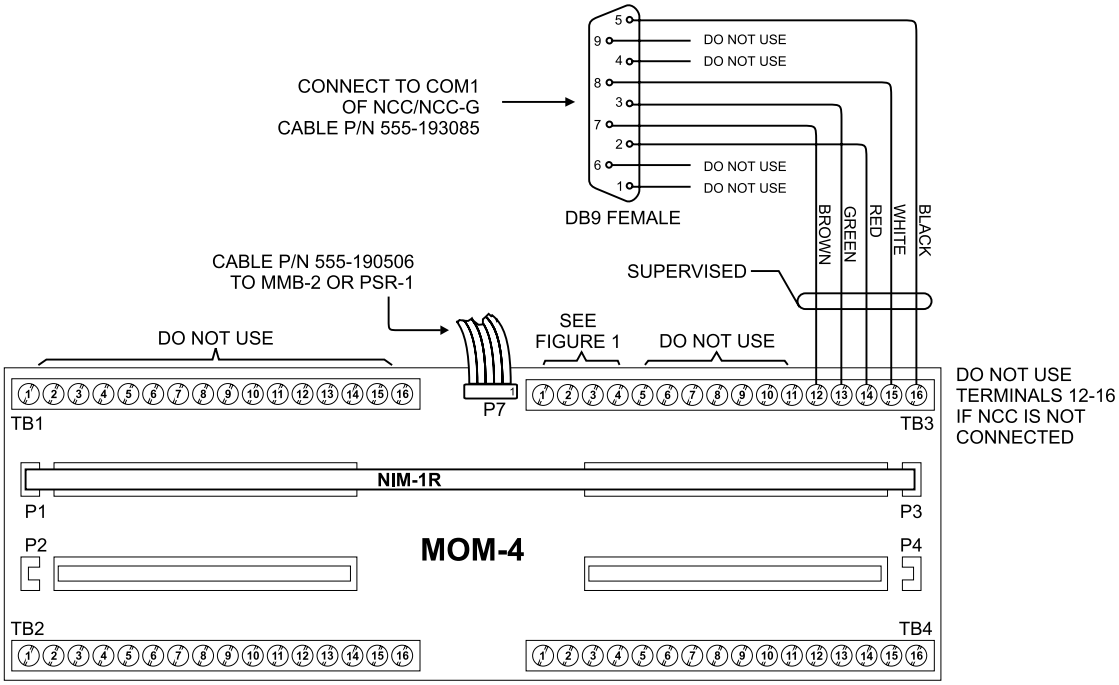


**NIM-1R and NCC Wiring (Figure 2)**



Technical Manuals Online! - http://www.tech-man.com

## Foreign System Interface (FSI)

The FSI installs on TB3 or TB4, terminals 1 and 2, of the MOM-4/-2 depending on where the NIM-1R is installed. Use one of the EOLRs provided with the NIM-1R on terminals 1 and 2. This properly terminates the FSI. Use the second EOLR on terminals 3 and 4. Never use terminals 3 and 4 to connect to the FSI. Refer to Figure 3 for the polarity of the FSI driver.

If multiple FSI connections are required, up to four NIM-1Rs may be installed in an individual MXL System. In networked systems each MXL can support up to four FSI ports.

For networked systems, each FSI port must be configured as either local or global in the CSG-M. Local FSI ports display information only on the MXL System to which they are connected. Global FSI ports display all events in all MXL Systems. Refer to the *CSG-M Manual,* P/N 315-090381, for further information.

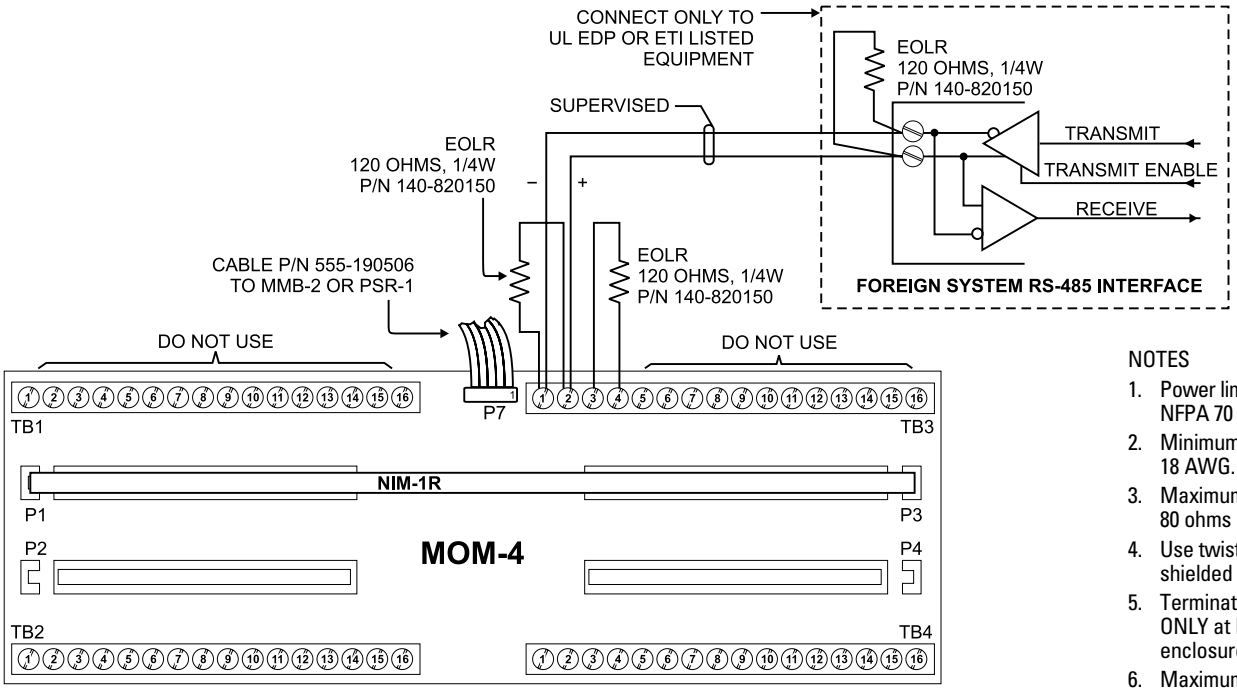


NOTES

1. Power limited to NFPA 70 per NEC 760.
2. Minimum wire size: 18 AWG.
3. Maximum resistance: 80 ohms per pair.
4. Use twisted pair or shielded twisted pair.
5. Terminate the shield ONLY at NIM-1R enclosure.
6. Maximum voltage: 8V P-P.
7. Maximum current: 150mA.

**NIM-1R and FSI Wiring (Figure 3)**



Technical Manuals Online! - http://www.tech-man.com

## AnaLASER Interface

The AnaLASER interface connects to the MOM-4/-2, TB3 or TB4, terminals 1 and 2, depending on where the NIM-1R is installed. Up to 31 AnaLASER detectors can be connected to a single NIM-1R.

The ACC-1 requires an RS-485 to RS-232 converter which mounts in the back of the ACC-1 enclosure. The converter model number is AIC-4Z. The AIC-4Z supports from one to four AnaLASER detectors. Refer to the *AIC-4Z Installation Instructions*, P/N 315-093792, for the mounting and configuration of the converter and the ACC-1s.

Complete wiring of the converter before installing the ACC-1 in the enclosure.

- Place the end-of-line resistors in the locations specified in Figure 4 below.
- Install the cable, P/N 500-693801 between the converter and the ACC-1.
- Refer to the *AnaLASER Air Sampling Smoke Detection Manual*, P/N 315-092893, for connection to the AnaLASER detector and power supply, as well as mechanical mounting of the ACC-1.

NOTES
1. Power limited to NFPA 70 per NEC 760.
2. Minimum wire size: 18 AWG.
3. Maximum resistance: 80 ohms per pair.
4. Use twisted pair or shielded twisted pair.
5. Terminate the shield ONLY at NIM-1R enclosure.
6. Maximum voltage: 8V P-P.
7. Maximum current: 150mA.

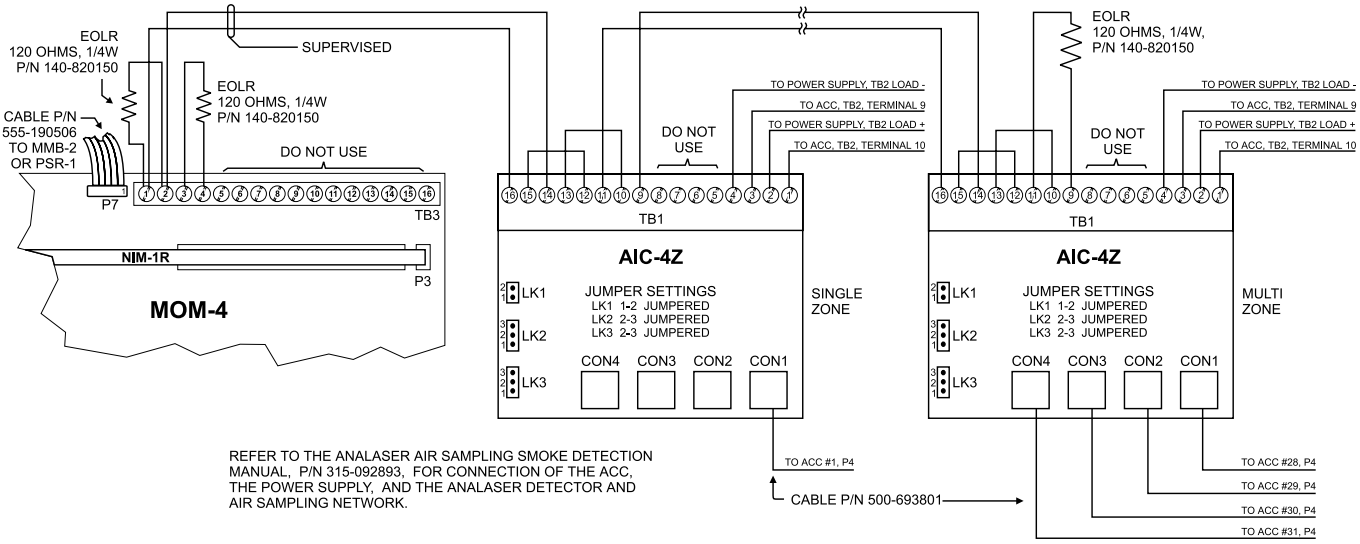


**NIM-1R and AnaLASER Wiring (Figure 4)**



Technical Manuals Online! - http://www.tech-man.com

# OCC-1 Connections and Ratings

**Electrical ratings:**
24 VDC, 17mA
5 VDC, 22mA

All wiring must be in accordance with Article 760 of NEC or the local building codes.

Maximum wire size:
14 AWG twisted pair, shielded

Minimum wire size:
18 AWG twisted pair, shielded

Maximum loop resistance:
20 ohms for all wires

End of Line Resistors

| | |
|---|---|
| Audio risers: | 10K, ½W, 5%<br>P/N 140-820396 |
| Telephone risers: | 5.6K, ½W, 5%<br>P/N 140-820390 |



Technical Manuals Online! - http://www.tech-man.com

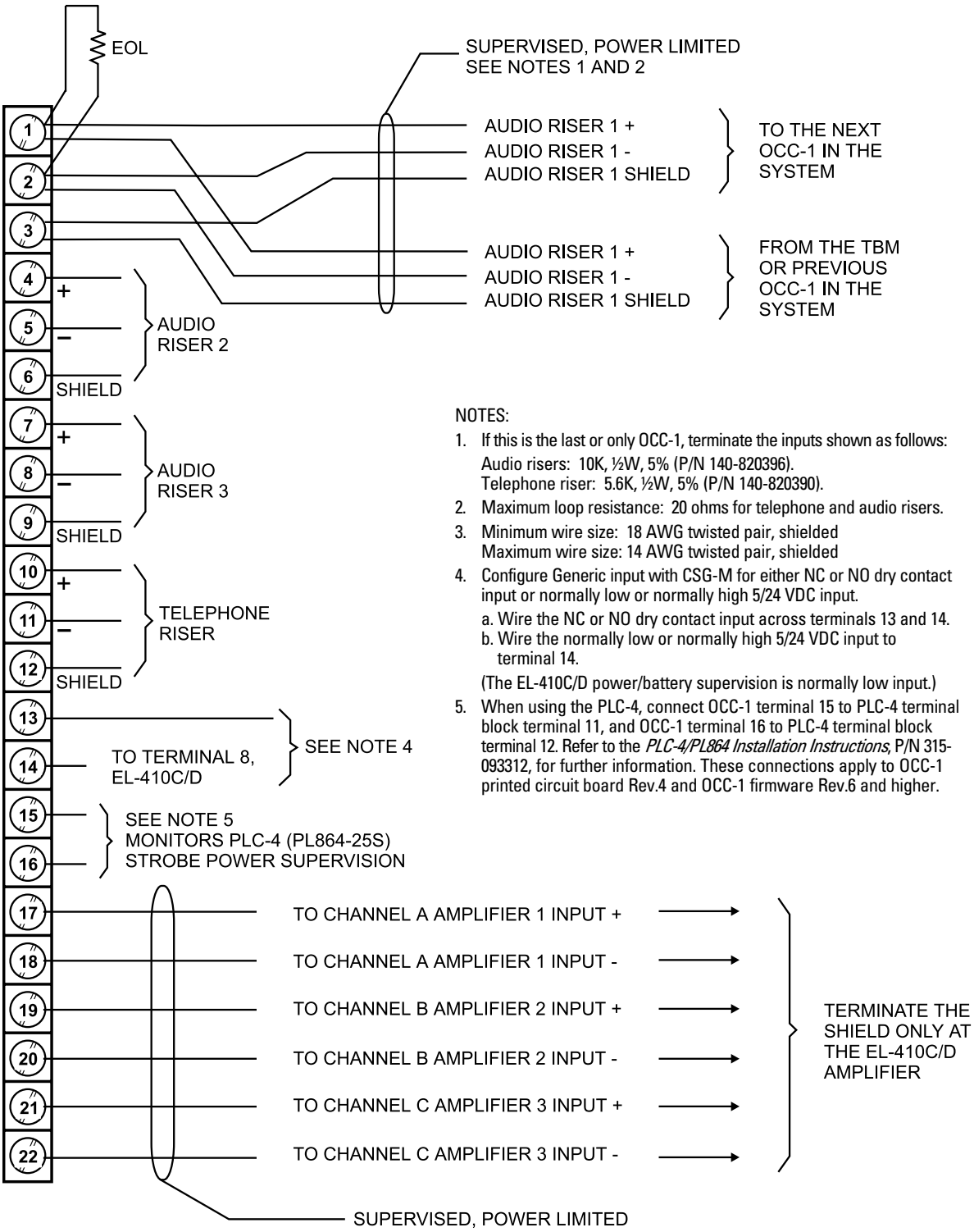


NOTES:

1. If this is the last or only OCC-1, terminate the inputs shown as follows:
   Audio risers: 10K, ½W, 5% (P/N 140-820396).
   Telephone riser: 5.6K, ½W, 5% (P/N 140-820390).
2. Maximum loop resistance: 20 ohms for telephone and audio risers.
3. Minimum wire size: 18 AWG twisted pair, shielded
   Maximum wire size: 14 AWG twisted pair, shielded
4. Configure Generic input with CSG-M for either NC or NO dry contact input or normally low or normally high 5/24 VDC input.
   a. Wire the NC or NO dry contact input across terminals 13 and 14.
   b. Wire the normally low or normally high 5/24 VDC input to terminal 14.
   (The EL-410C/D power/battery supervision is normally low input.)
5. When using the PLC-4, connect OCC-1 terminal 15 to PLC-4 terminal block terminal 11, and OCC-1 terminal 16 to PLC-4 terminal block terminal 12. Refer to the *PLC-4/PL864 Installation Instructions*, P/N 315-093312, for further information. These connections apply to OCC-1 printed circuit board Rev.4 and OCC-1 firmware Rev.6 and higher.

**PLACE AMPLIFIER INPUT AND OUTPUT CABLES IN SEPARATE CONDUITS**

**Wiring the OCC-1**



Technical Manuals Online! - http://www.tech-man.com

# OMM-1 Connections and Ratings

**Electrical connections:**
All wiring must be in accordance with Article 760 of NEC or the local building codes.

A 2-conductor wire cable (P/N 600-192239) is supplied with the ACM-1 module to use on the OMM-1 which is installed in the left-hand position. Use this cable to connect 24 VDC from P3 on the MMB-1/-2 to TB1 on the OMM-1 module. When using a PSR-1, connect two individual 14 AWG wires between the OMM-1 TB1 and PSR-1 TB3-1 and TB3-2.

- The terminals on OMM-1 TB1 are marked **+24V** and **RET**.
- On MMB-1/-2 P3, 1 is positive and 2 is negative.
- On PSR-1 TB3, 1 is positive and 2 is negative.
- On MMB-2 TB1, 5 is positive and 4 is negative.

Assign plug-in cards to the card edge connectors. Once the terminal block related to each edge connector is wired, place only the assigned plug-in card in that edge connector.

Refer to the Installation Instructions listed in the following table for directions on wiring to the 22 position OMM-1 terminal blocks and for attaching these modules to the OMM-1 terminal blocks.

| Installation Instructions | Part Number |
|---|---|
| ASC-1 | 315-091263 |
| ASC-2 | 315-092085 |
| OCC-1 | 315-090918 |
| PLC-4 | 315-093312 |
| RCM-1 | 315-093878 |
| ZAC-30 | 315-092960 |
| ZC1-8B | 315-090910 |
| ZC2-4AB | 315-091262 |
| ZC2-8B | 315-092116 |
| ZC3-4AB | 315-092089 |
| ZCT-8B | 315-092105 |

If the system includes more than one OMM-1, use the 14-conductor ribbon cable (P/N 555-192155) to connect P1 of the first OMM-1 to P2 of the second OMM-1. If there is a third OMM-1, connect P1 of the second OMM-1 to P2 of the third OMM-1. No more than three OMM-1s can be connected together in an MME-3 enclosure. In an MLE-6 enclosure a maximum of six OMM-1s can be installed provided the OCC-1 submodule limit of 11 or the power supply capacity as described in **Appendix D - MXL Power Supply Load Calculations** is not exceeded.

Note that there are two 8-conductor cables. The long 8-conductor cable (P/N 555-192243), comes with the ACM-1. Use this cable for communications and power from P4 on the OMM-1 to either P6 on the PSR or to P6 on the MMB-1/-2, whichever is present. This



Technical Manuals Online! - http://www.tech-man.com

cable is polarized. Observe polarity and DO NOT USE EXCESSIVE FORCE. The black tracer on the cable indicates the position of pin 1.

If there is more than one OMM-1, use the short 8-conductor cable (P/N 555-190967) to connect P3 of the left-hand OMM-1 to P4 of the OMM-1 that is to its right.

This cable is polarized. Observe polarity and DO NOT USE EXCESSIVE FORCE. The black tracer on the cable indicates the location of pin 1. If there is a third OMM, repeat this step.

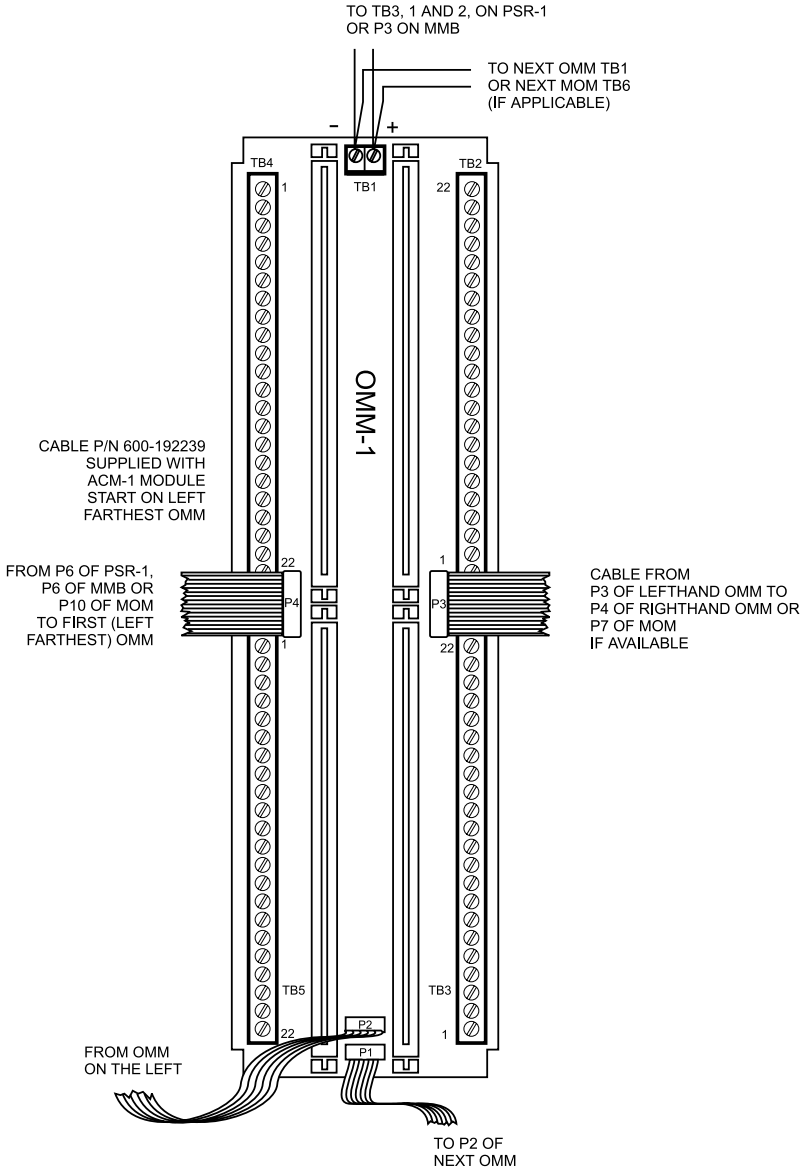


**OMM-1 Wiring**



Technical Manuals Online! - http://www.tech-man.com

# OMM-2 Connections and Ratings

**Electrical connections:**
All wiring must be in accordance with Article 760 of NEC or the local building codes.

A 2-conductor wire cable (P/N 600-192239) is supplied with the ACM-1 module to use on the OMM-2 which is installed in the left-hand position. Use this cable to connect 24 VDC from P3 on the MMB-1/-2 to TB1 on the OMM-2 module. When using a PSR-1, connect two individual 14 AWG wires between the OMM-2 TB1 and PSR-1 TB3-1 and TB3-2.

- The terminals on OMM-2 TB1 are marked **+24V** and **RET**.
- On MMB-1/-2 P3, 1 is positive and 2 is negative.
- On PSR-1 TB3, 1 is positive and 2 is negative.
- On MMB-2 TB1, 5 is positive and 4 is negative.

Assign plug-in cards to the card edge connectors. Once the terminal block related to each edge connector is wired, place only the assigned plug-in card in that edge connector.

Refer to the Installation Instructions listed in the following table for directions on wiring to the 22 position OMM-2 terminal blocks and for attaching these modules to the OMM-2 terminal blocks.

| Installation Instructions | Part Number |
|---|---|
| ASC-1 | 315-091263 |
| ASC-2 | 315-092085 |
| OCC-1 | 315-090918 |
| PLC-4 | 315-093312 |
| RCM-1 | 315-093878 |
| ZAC-30 | 315-092960 |
| ZC1-8B | 315-090910 |
| ZC2-4AB | 315-091262 |
| ZC2-8B | 315-092116 |
| ZC3-4AB | 315-092089 |
| ZCT-8B | 315-092105 |

If the system includes more than one OMM-2, use the 14-conductor ribbon cable (P/N 555-192155) to connect P1 of the first OMM-2 to P2 of the second OMM-2. If there is a third OMM-2, connect P1 of the second OMM-2 to P2 of the third OMM-2. No more than three OMM-2s can be connected together in an MME-3 enclosure. In an MLE-6 enclosure a maximum of six OMM-2s can be installed provided the OCC-1 submodule limit of 11 or the power supply capacity as described in **Appendix D - MXL Power Supply Load Calculations** is not exceeded.

Note that there are two 8-conductor cables. The long 8-conductor cable (P/N 555-192243), comes with the ACM-1. Use this cable for communications and power from P4 on the OMM-2 to either P6 on the PSR or to P6 on the MMB-1/-2, whichever is present. This



Technical Manuals Online! - http://www.tech-man.com

cable is polarized. Observe polarity and DO NOT USE EXCESSIVE FORCE. The black tracer on the cable indicates the position of pin 1.

If there is more than one OMM-2, use the short 8-conductor cable (P/N 555-190967) to connect P3 of the left-hand OMM-2 to P4 of the OMM-2 that is to its right.

This cable is polarized. Observe polarity and DO NOT USE EXCESSIVE FORCE. The black tracer on the cable indicates the location of pin 1. If there is a third OMM, repeat this step.

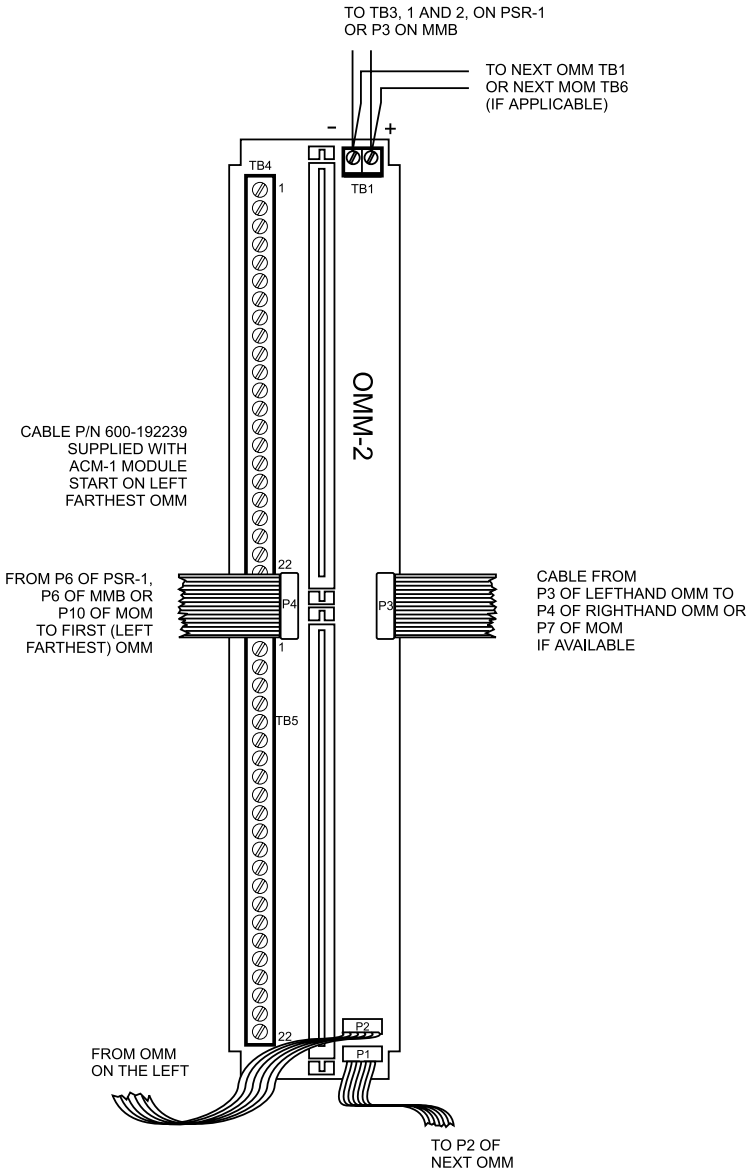


**OMM-2 Wiring**



Technical Manuals Online! - http://www.tech-man.com

# PIM-1 Connections and Ratings

**Electrical ratings:**

RS-232C Interface $V_{MAX}$: ±12 VDC
$I_{MAX}$: ±5mA

**Maximum cable length**

25 feet (2 ohms max per circuit)

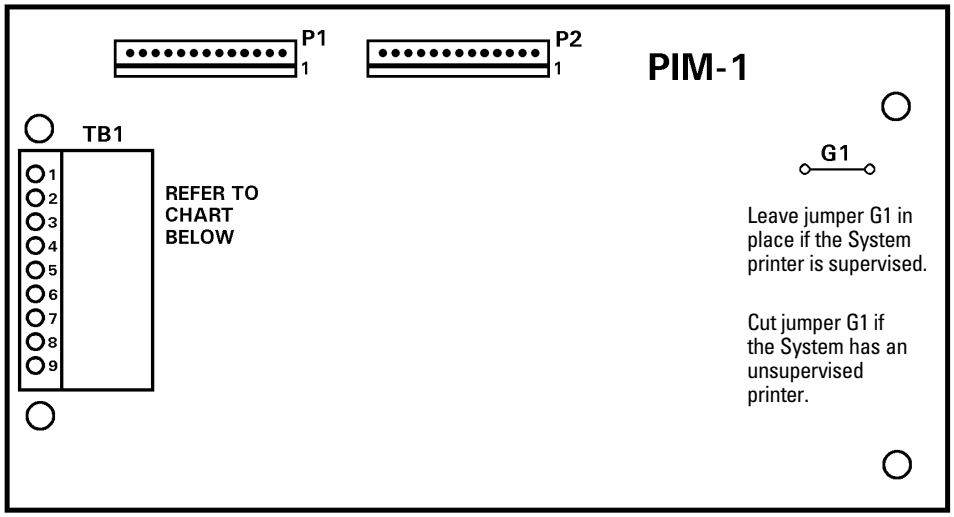


NOTES

1. Terminals TB1-8 and 9 are connected together on the PIM-1.
2. The busy signal from the printer prevents the loss of characters if the printer falls behind. Refer to the printer manual for the proper pin [usually 11 (TB1-3) or 20 (TB1-9)].

CAUTION
This table refers to whether or not the wiring connections are supervised. The table does not refer to the type of printer used in the System.

| DATA DIRECTION | TB1 | | | |
|---|---|---|---|---|
| | 1 | NOT SUPERVISED | SHIELD: | CONNECT TO CABLE SHIELD |
| | 2 | NOT SUPERVISED | COMMON: | CONNECT TO PRINTER, PIN 7 (DB-25 CONNECTOR) |
| → | 3 | SUPERVISED | BUSY: | CONNECT TO PRINTER, PIN 11 OR 20 (DB-25) SEE NOTE 2 |
| → | 4 | SUPERVISED | RECEIVE: | CONNECT TO PRINTER, PIN 2 (DB-25 CONNECTOR) |
| ← | 5 | SUPERVISED | TRANSMIT: | CONNECT TO PRINTER, PIN 3 (DB-25 CONNECTOR) |
| | 6 | DO NOT USE | RESERVED FOR FUTURE USE | |
| | 7 | NOT SUPERVISED | CONNECT TO PRINTER, PINS 4 AND 5 (DB-25 CONNECTOR) | |
| | 8 | NOT SUPERVISED | CONNECT TO PRINTER, PINS 6 AND 8 (DB-25 CONNECTOR), SEE NOTE 1 | |
| | 9 | NOT SUPERVISED | CONNECT TO PRINTER, PIN 20 (DB-25 CONNECTOR), SEE NOTE 1 | |

POWER LIMITED

**PIM-1 Wiring**



Technical Manuals Online! - http://www.tech-man.com

Technical Manuals Online! - http://www.tech-man.com

# PIM-2 / PAL-1 Connections and Ratings

**PIM-2 SERIAL INTERFACE COMMUNICATION PARAMETERS**

| | Dipswitch Position (SW1) - Located at rear of PIM-2 | | | | | | | |
|---|---|---|---|---|---|---|---|---|
| | 1 | 2 | 3 | 4 | 5 | 6 | 7 | 8 |
| Baud Rate | | | | | | | | |
| 9600 | OFF | ON | OFF | | | | | |
| 4800 | ON | ON | OFF | | | | | |
| 2400 | OFF | OFF | ON | | | | | |
| 1200 | ON | OFF | ON | | | | | |
| 300 | ON | ON | ON | | | | | |
| Data Bits | | | | | | | | |
| 8 | | | | OFF | | | | |
| 7 | | | | ON | | | | |
| Parity | | | | | | | | |
| Even | | | | | OFF | | | |
| Odd | | | | | ON | | | |
| Parity | | | | | | | | |
| Disable | | | | | | OFF | | |
| Enable | | | | | | ON | | |
| Flow Control | | | | | | | | |
| Hardware | | | | | | | OFF | |
| Software | | | | | | | ON | |
| Port Type | | | | | | | | OFF |

NOTE: When setting switch S1,
OFF = UP = OPEN
ON = DOWN = CLOSED

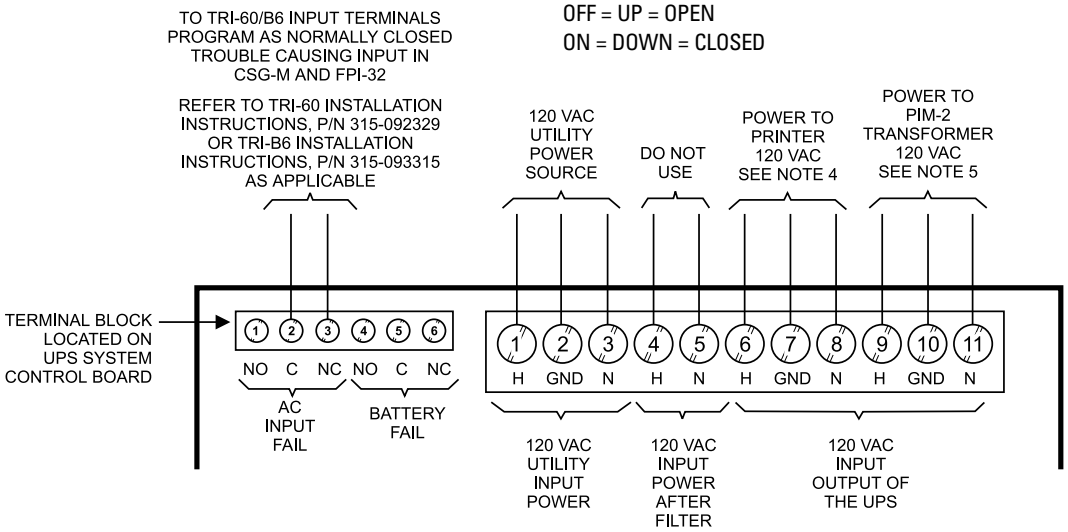


**UPS Wiring for PIM-2**

NOTES

1. Minimum wire size: 14 AWG, 600V insulation.
2. Wiring to the printer and PIM-2 must be 14 AWG min, 600V insulation in conduit.
3. Use the UPS ICS Lifeline Model 930057.
4. Standby Power requirements: 120 VAC, 0.6A for 24 hours.
5. Standby Power requirements: 120 VAC, 0.15A for 24 hours.



Technical Manuals Online! - http://www.tech-man.com

NOTES

1. Maximum cable distance from PIM-1 to PIM-2 cable is 25 feet. The two modules must be in the same room.
2. The maximum distance from the PIM-2 to the parallel printer is 6 feet. The two modules must be in the same room.
3. PIM-2 power (PWR) is connected to the 5 VDC, 600mA transformer supplied with the PIM-2. The transformer requires 120 VAC, 60 Hz, 0.5A max.
4. For NFPA 72 Local, Auxiliary, and Remote Station configurations, connect the output of the PIM-2 to any UL listed EDP parallel printer.
5. The parallel printer must support the EPSON FX command set.
6. The PIM-2 input and output connectors are DB-25 female.
7. Pressing RESET on the PIM-2 causes the unit to read the SW1 settings. The status LED is lit when the unit is powered. Do not use the COPY button.
8. For NFPA Proprietary and UL 1076 configurations, use parallel printer Model PAL-1, a UL listed for fire parallel printer.
9. The parallel printer is supervised for AC, on/off line, paper out, paper jam, and connection to the PIM-2.
10. The PIM-2 is supervised for power, connection to the printer, and connection to the PIM-1.
11. After loading paper in the PAL-1 printer, turn off the power and follow the steps below:
    - While pressing the LOAD PARK button, turn on the power to the PAL-1 printer. Keep pressing the LOAD PARK button for 5 seconds.
    - Release the LOAD PARK button.
    - The current setting will print.
    - When printing is completed, the ON LINE indicator will be lit. If the ON LINE indicator is not lit, press the ON LINE button.

| PIM-1 (with Terminal Block) TO PIM-2 INTERFACE REQUIREMENTS (Supplied by installer) | | |
|---|---|---|
| PIM-1/CXC-2 TB1 | to | PIM-2 Input Pin No. |
| 4 (Rx) | | 2 (TxD) |
| 5 (Tx) | | 3 (RxD) |
| 7 | | 4,5 (RTS, CTS) |
| 3 (BUSY) | | 20 (DTR) |
| 2 (COMMON) | | 7 (GRD) |

Use 18 AWG wire minimum.

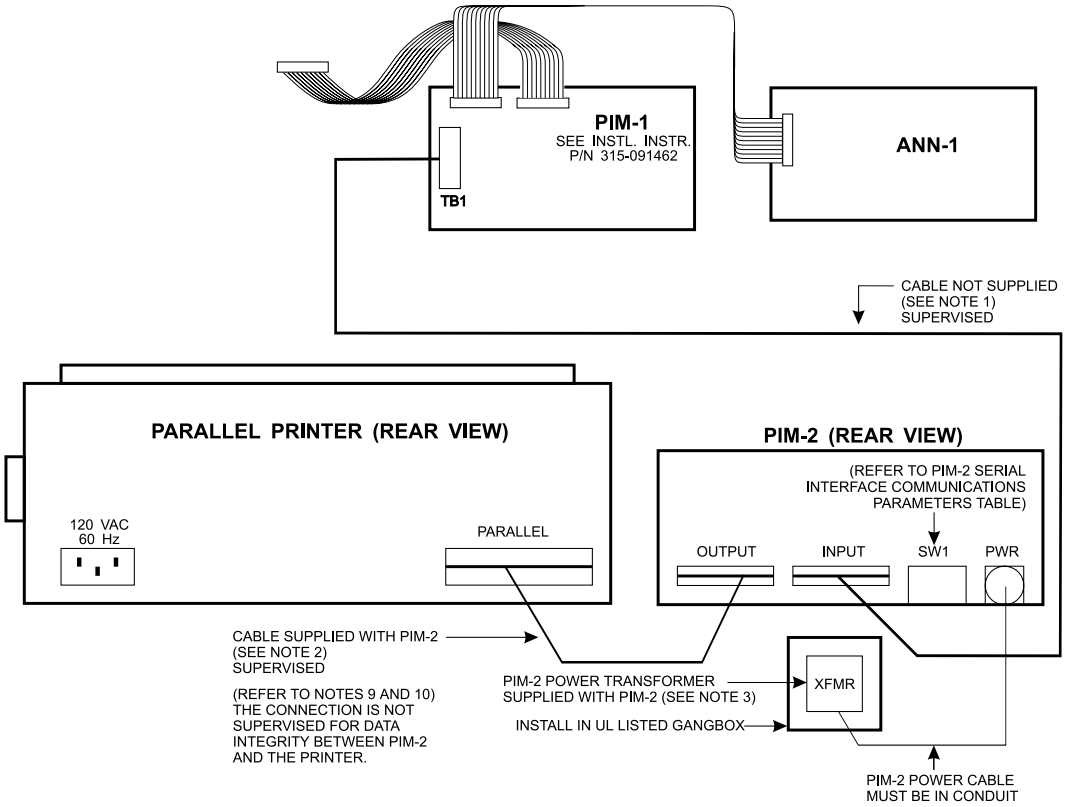


**PIM-2 to MXL Wiring**



Technical Manuals Online! - http://www.tech-man.com

| PIM-1/CXC-2 (with D-Connector) TO PIM-2 INTERFACE REQUIREMENTS (Supplied by installer) | | |
|---|---|---|
| PIM-1/CXC-2 Pin No. | to | PIM-2 Input Pin No. |
| 2 (RxD) | | 2 (TxD) |
| 3 (TxD) | | 3 (RxD) |
| 7 (GRD) | | 7 (GRD) |
| 20 (BUSY)* | | 20 (DTR)* |

Use 18 AWG wire minimum.

*Pin 20 is not used on the CXL. The CXL uses software flow control only.

NOTES

1. Maximum distance from PIM-2 to parallel printer is 6 feet. The modules must be in the same room.
2. Connect PIM-2 power (PWR) to the 5 VDC, 600mA transformer supplied with PIM-2. The transformer requires 120 VAC, 60 Hz, 0.5A max.
3. PIM-2 input and output connectors are DB-25 female.
4. Pressing RESET on the PIM-2 causes the unit to read the SW1 settings. The status LED is lit when the unit is powered. Do not use the COPY button.
5. Use revision 7.0 or higher of CXL firmware to support this option.
6. PAL-1 is supervised for AC, on/off line, paper out, paper jam, and connection to PIM-2.
7. PIM-2 is supervised for power, connection to printer, and CXC-2.
8. Set the dipswitches on the back of the PIM-2 for 9600 baud, odd parity, 7 data bits, 1 stop bit, and software flow control (XON/OFF).

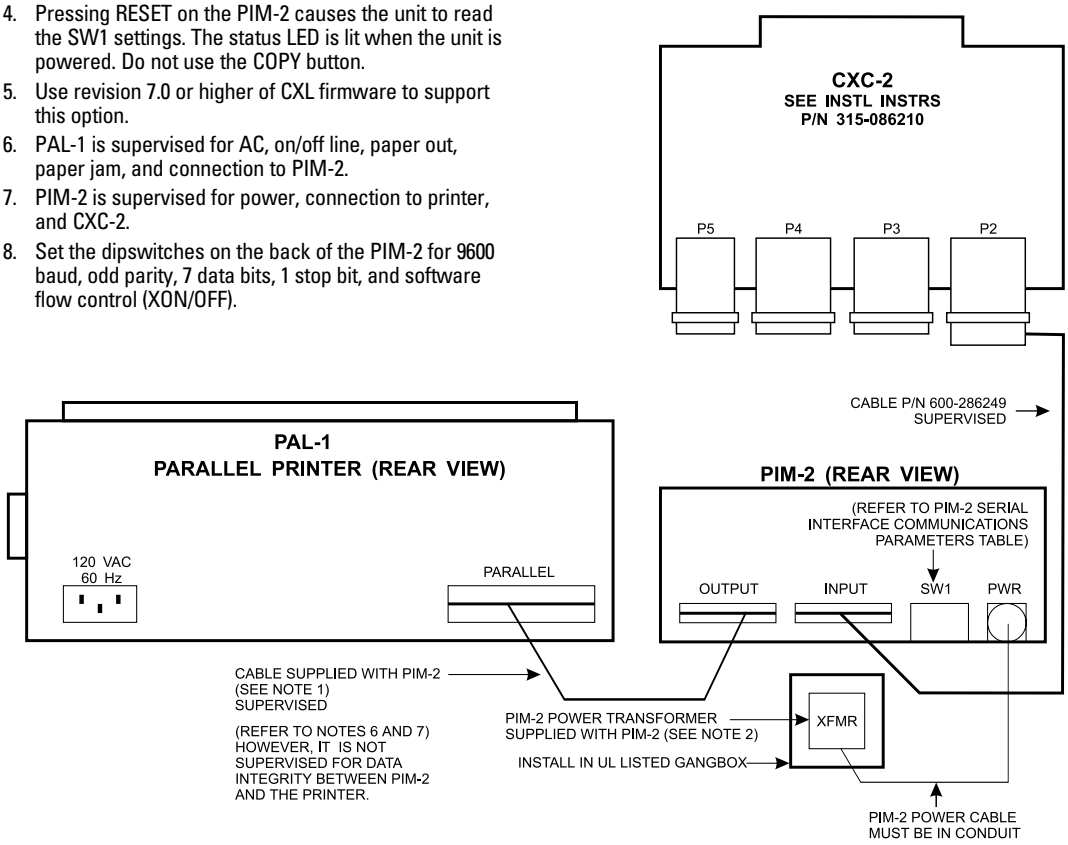


**PIM-2 to CXL Wiring**



Technical Manuals Online! - http://www.tech-man.com

Technical Manuals Online! - http://www.tech-man.com

# PLC-4 Connections and Ratings

**Electrical ratings:**

Maximum wire size:
14 AWG twisted pair, unshielded

Minimum wire size:
18 AWG twisted pair, unshielded

Input/output ratings for each circuit:

| | |
|---|---|
| Audio: | 100W at 25V RMS |
| | 100W at 70.7V RMS |
| Strobe: | 4 amps at 24 VDC (96W) |

**Electrical connections:**

All wiring must be in accordance with Article 760 of NEC or the local building codes.

Dress the leads properly. Maintain the proper routing and distances between the wiring that is power limited (terminals 15-22) and wiring that is not power limited (terminals 1-8). Refer to the *MME-3 or MLE-6 Power Limited Wiring Instructions*, P/N 315-094883 or 315-094970, as applicable for further information.

When wiring for strobe cards:

- Connect PLC-4 (PL864-25S), terminals 11 and 12, to the OCC-1 terminal block, terminals 15 and 16 respectively, for supervision of strobe power.
- Route these wires with the power limited wires.



Technical Manuals Online! - http://www.tech-man.com

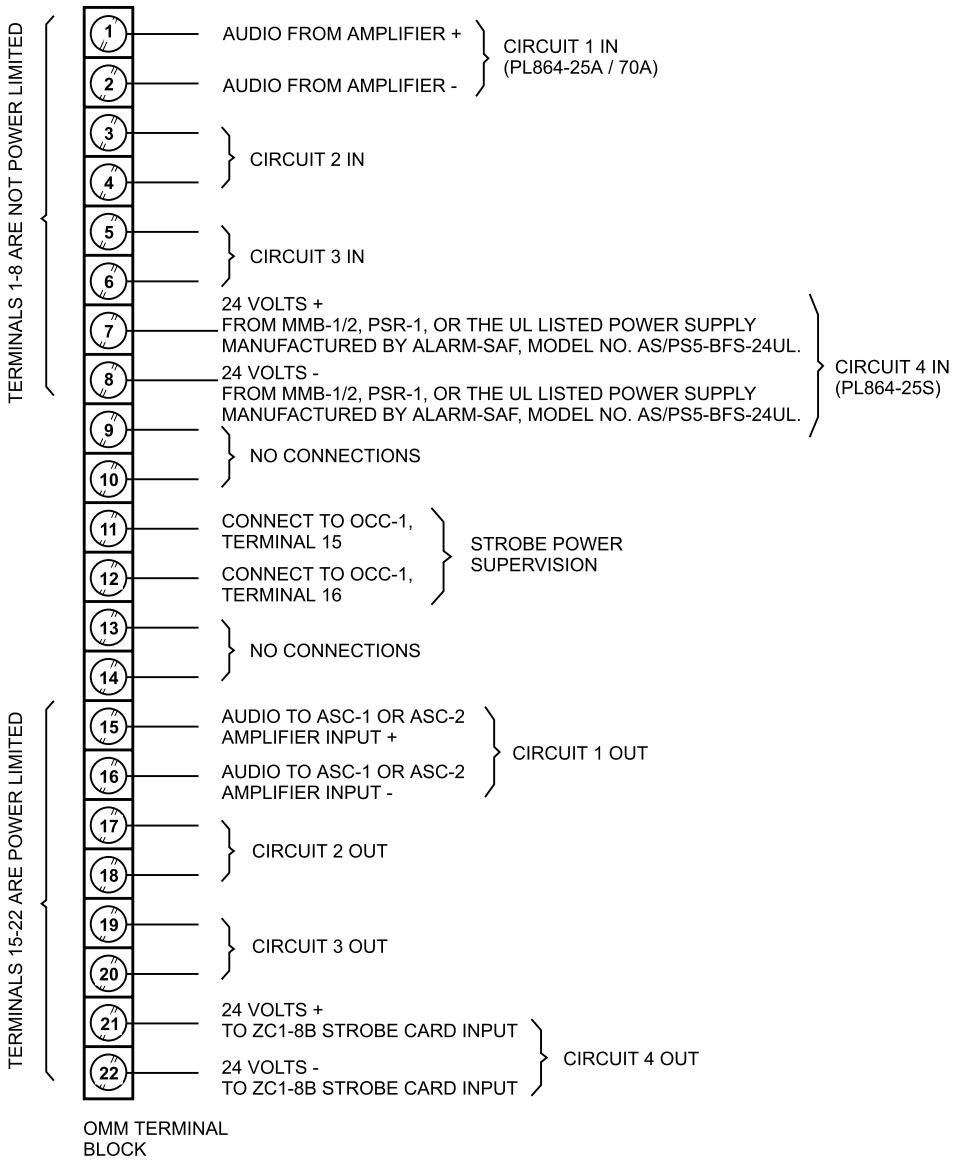


NOTES

1. Minimum Wire Size: 18 AWG twisted pair, unshielded.
2. Maximum Wire Size: 14 AWG twisted pair, unshielded.
3. Input/output rating for each circuit:
   Audio:
   100W at 25V RMS.
   100W at 70.7V RMS.
   Strobe:
   24 VDC at 4A (96W).
4. Wiring shown for Circuit 1 is typical of circuits used for audio. Use the PL864-25A for 25V RMS circuits. Use the PL864-70A for 70.7V RMS circuits.
5. Wiring shown for Circuit 4 is typical of circuits used for strobes. Use the PL864-25S plug-on card only.

**Typical PLC-4 Wiring**



Technical Manuals Online! - http://www.tech-man.com

# PS-5A Connections and Ratings

**Electrical ratings:**

Input 18-31 VDC
300mA max
J1: 24V feed through 250mA max

Output
J2 and J3: 5 VDC, 1A max
(Total current on J2 and J3)

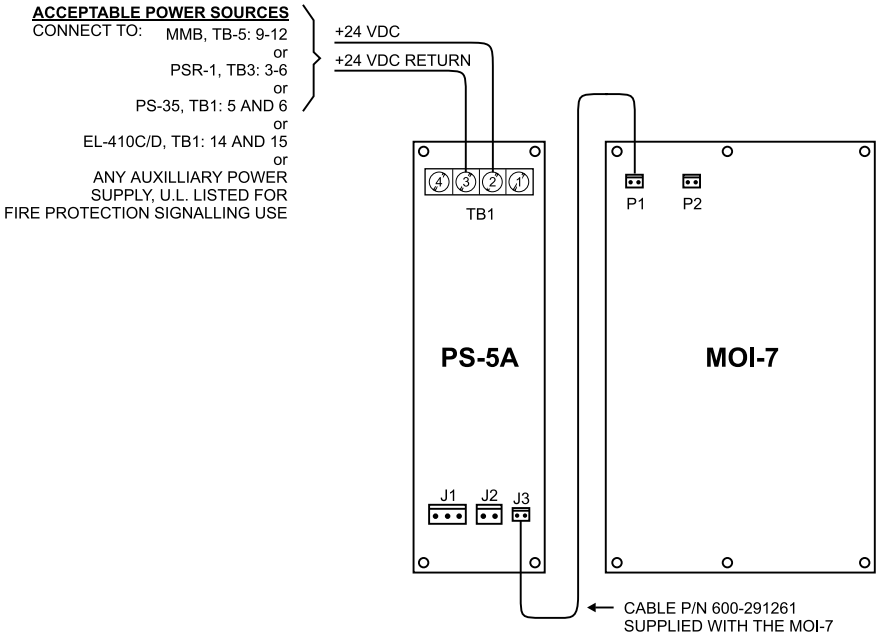


NOTES

Wiring restricted to the same room and within conduit, not to exceed 20 ft.

Refer to the installation instructions listed below, as appropriate

| | |
|---|---|
| EL-410C | P/N 315-091460 |
| EL-410D | P/N 315-094916 |
| MMB-1 | P/N 315-090375 |
| MMB-2 | P/N 315-095097 |
| MOI-7 | P/N 315-092799 |
| PS-35 | P/N 315-085062 |
| PSR-1 | P/N 315-090911 |

**PS-5A Wiring**



Technical Manuals Online! - http://www.tech-man.com

Technical Manuals Online! - http://www.tech-man.com

# PS-5N7 Connections and Ratings

**Electrical ratings:**

| | |
|---|---|
| 24 VDC input | 14-31 VDC<br>300mA max |
| 5 VDC output | 5 VDC<br>500mA max |
| Network | 8V P-P max<br>150mA max |

The PS-5N7 requires a DC input which is available from the MMB-1/-2 or the PSR-1.

**Using the PS-5N7 with Style 4 (2-Wire) Network Connections**

Use screw terminals 1 and 2 for Network A. DO NOT USE wire terminals 3 and 4 in this configuration. Refer to the PSR-1 Installation Instructions (P/N 315-090911) for more details on Style 4 networks.

**Using PS-5N7 with Style 7 (4-Wire) Network Connections**

Do not place the PS-5N7 module in the last position on a Style 7 Network. Use a NET-7 at each end of the network to provide proper supervision. Use screw terminals 1 and 2 for Network A, terminals 3 and 4 for Network B.

Refer to the following Installation Instructions for further information:

| | |
|---|---|
| MMB-2 | P/N 315-095097 |
| PSR-1 | P/N 315-090911 |
| PS-35 | P/N 315-085062 |
| PLM-35 | P/N 315-093495 |
| PAD-2 | P/N 315-094275 |

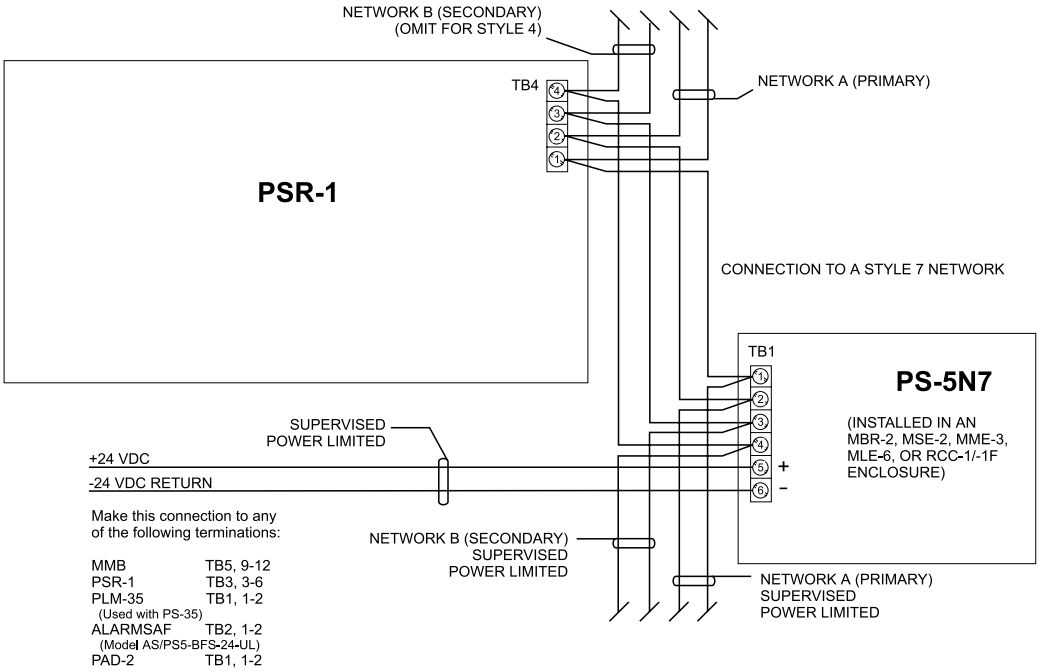


**PS-5N7 Power Supply and Network Wiring**

NOTES

1. Power limited to NFPA 70 per NEC 760.
2. Minimum wire size: 18 AWG.
3. Maximum resistance: 80 ohms per pair.
4. Use twisted pair or shielded twisted pair.
5. Terminate the shield ONLY at the MMB-1/-2 enclosure.
6. Maximum voltage: 8V P-P.
7. Maximum current: 150mA.
8. Eliminate all Network B wiring for Style 4.
9. DO NOT place the PS-5N7 at the end of the network (Style 7 only).



Technical Manuals Online! - http://www.tech-man.com

### Using the PS-5N7 to Drive an OMM-1

In order to add Voice hardware to a remote enclosure, use a PS-5N7 module to drive an OMM-1 if the following conditions apply:

1. The remote enclosure is not connected to the MMB-1/-2, and
2. There are multiple MXLs that are not networked.

Adding a PS-5N7 and an OMM-1 under there conditions provides power as well as communication with the MXLV.

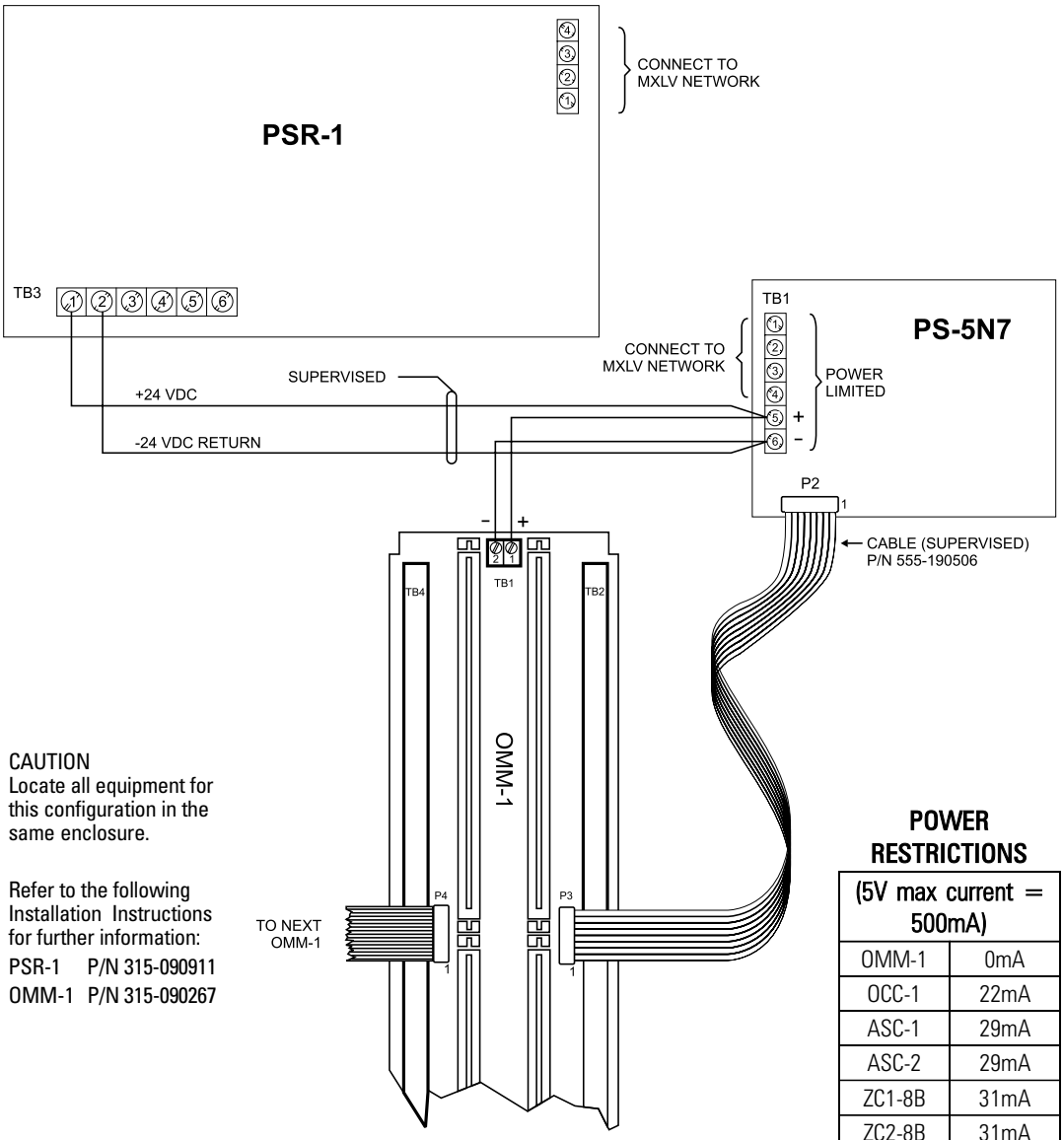


CAUTION
Locate all equipment for this configuration in the same enclosure.

Refer to the following Installation Instructions for further information:
PSR-1 P/N 315-090911
OMM-1 P/N 315-090267

**POWER RESTRICTIONS**

| (5V max current = 500mA) | |
|---|---|
| OMM-1 | 0mA |
| OCC-1 | 22mA |
| ASC-1 | 29mA |
| ASC-2 | 29mA |
| ZC1-8B | 31mA |
| ZC2-8B | 31mA |
| ZC2-4AB | 30mA |
| ZC3-4AB | 28mA |
| ZCT-8B | 33mA |

**PS-5N7 and OMM-1 Wiring**



Technical Manuals Online! - http://www.tech-man.com

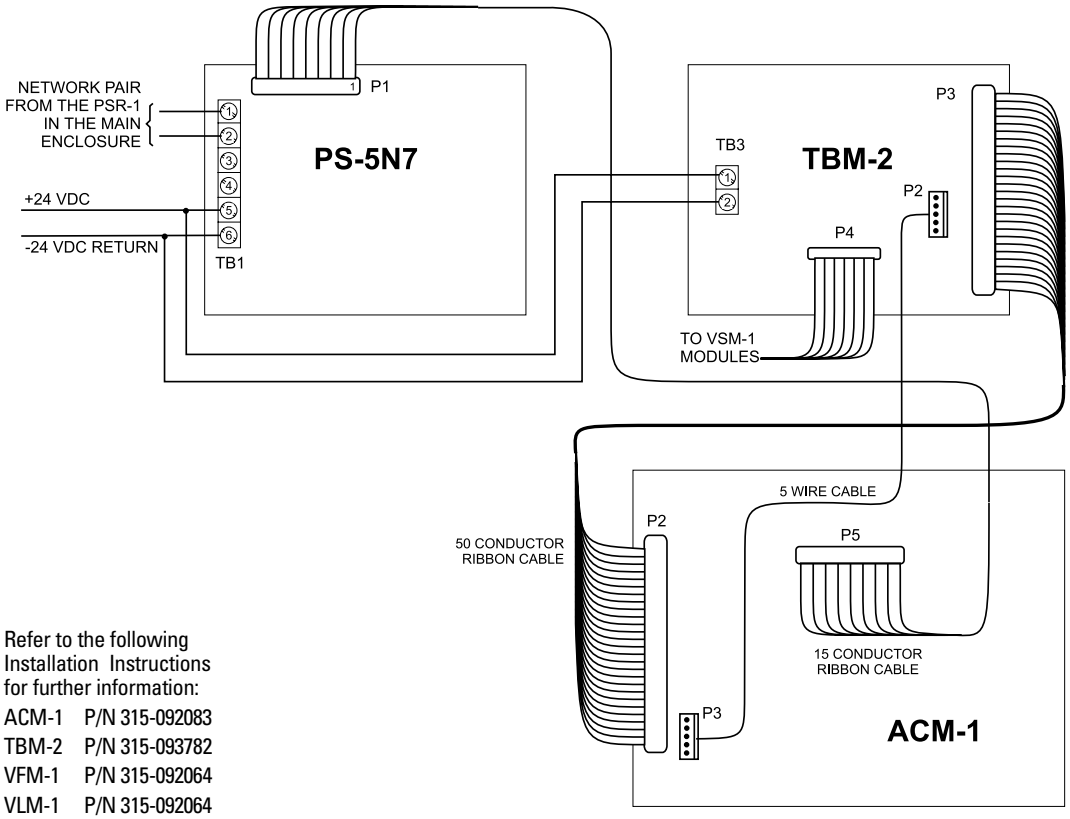


Refer to the following Installation Instructions for further information:

ACM-1 P/N 315-092083
TBM-2 P/N 315-093782
VFM-1 P/N 315-092064
VLM-1 P/N 315-092064
VSM-1 P/N 315-092064

**PS-5N7 in a Remote Extender Enclosure Wiring**



Technical Manuals Online! - http://www.tech-man.com

Technical Manuals Online! - http://www.tech-man.com

# PSR-1, NET-4, NET-7, NET-7M Connections and Ratings

### Primary power

Primary power for the PSR-1 is provided by the MPS-6/6W or MPS-12/12W. Both of these mount in the lower right-hand corner of the MXL enclosure. Follow the instructions below for the appropriate power supply.

**MPS-6/6W**—Install the MPS-6/6W (See *MPS-6/6W Installation Instructions*, P/N 315-090334). With the AC mains disconnected, connect the MPS-6/6W power cable to P12 of the PSR-1. **Be sure that the jumper assembly is installed in P10 of the PSR-1. If this jumper is not installed, the PSR-1 will detect a permanent AC fail or indicate auxiliary power voltage is low.**

**MPS-12/12W**—Install the MPS-12/12W (See *MPS-12/12W Installation Instructions*, P/N 315-092030). Remove and discard the jumper assembly installed in P10 of the PSR-1. Disconnect the AC mains. Connect the MPS-12/12W power cable to P10 of PSR-1.

### Battery backup

Battery backup is required for the PSR-1. To determine the size battery you must use, refer to **Appendix C - MXL Battery Calculations** on page C-1. Connect the 24V backup batteries to P8 of PSR-1.

### Making the network connection (TB4)

For the PSR-1 to communicate with the MXL, a NET-4 or NET-7 network interface card must be installed into P7 of the PSR-1. For a NET-4, connect the MXL network (MMB-1/-2) to terminals 1 and 2 of TB4. Terminate the shield at the MMB-1/-2 only. For a NET-7, refer to Figure 2 of the *NET-7 Installation Instructions*, P/N 315-091914 and connect the network to terminals 1, 2, 3, and 4. When the PSR-1 is used as a stand alone power supply, neither NET-4 nor NET-7 is needed.



Technical Manuals Online! - http://www.tech-man.com

NOTES

1. Power limited to NFPA 70 per NEC 760.
2. Minimum wire size: 18 AWG.
3. Maximum resistance: 80 ohms total.
4. Use twisted pair or shielded twisted pair.
5. Terminate the shield ONLY at the MMB-1/-2 enclosure.
6. Maximum voltage: 8V P-P.
7. Maximum current: 150mA.

# NET-4

**Electrical Ratings:**

| | |
|---|---|
| Supervisory | 5V, ±5%<br>20mA |
| Alarm | 5V, ±5%<br>20mA |
| Battery | 24V<br>5mA |

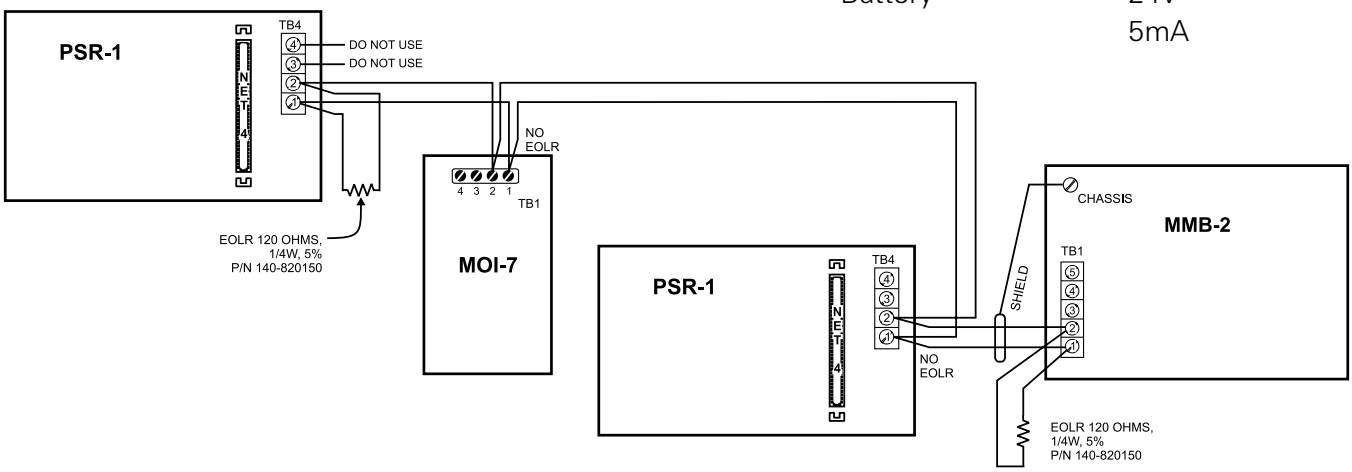


**NET-4 Wiring**

# NET-7

**Electrical ratings:**

| | |
|---|---|
| Supervisory | 5V<br>120mA avg<br>140mA max |
| Alarm | 5V<br>120mA avg<br>140mA max |
| Battery | 24V<br>30mA |

**End of line resistors:**

End of line resistors are provided with each NET-7. DO NOT PLACE AN END OF LINE RESISTOR AT EACH NET-7. These devices are required at the two extreme ends of each network pair as shown in the NET-7 Wiring Diagram. It is not required that the MMB-1/-2 be at one of the ends. It may be at any location along the network. T-tapping is not allowed on the network.



Technical Manuals Online! - http://www.tech-man.com

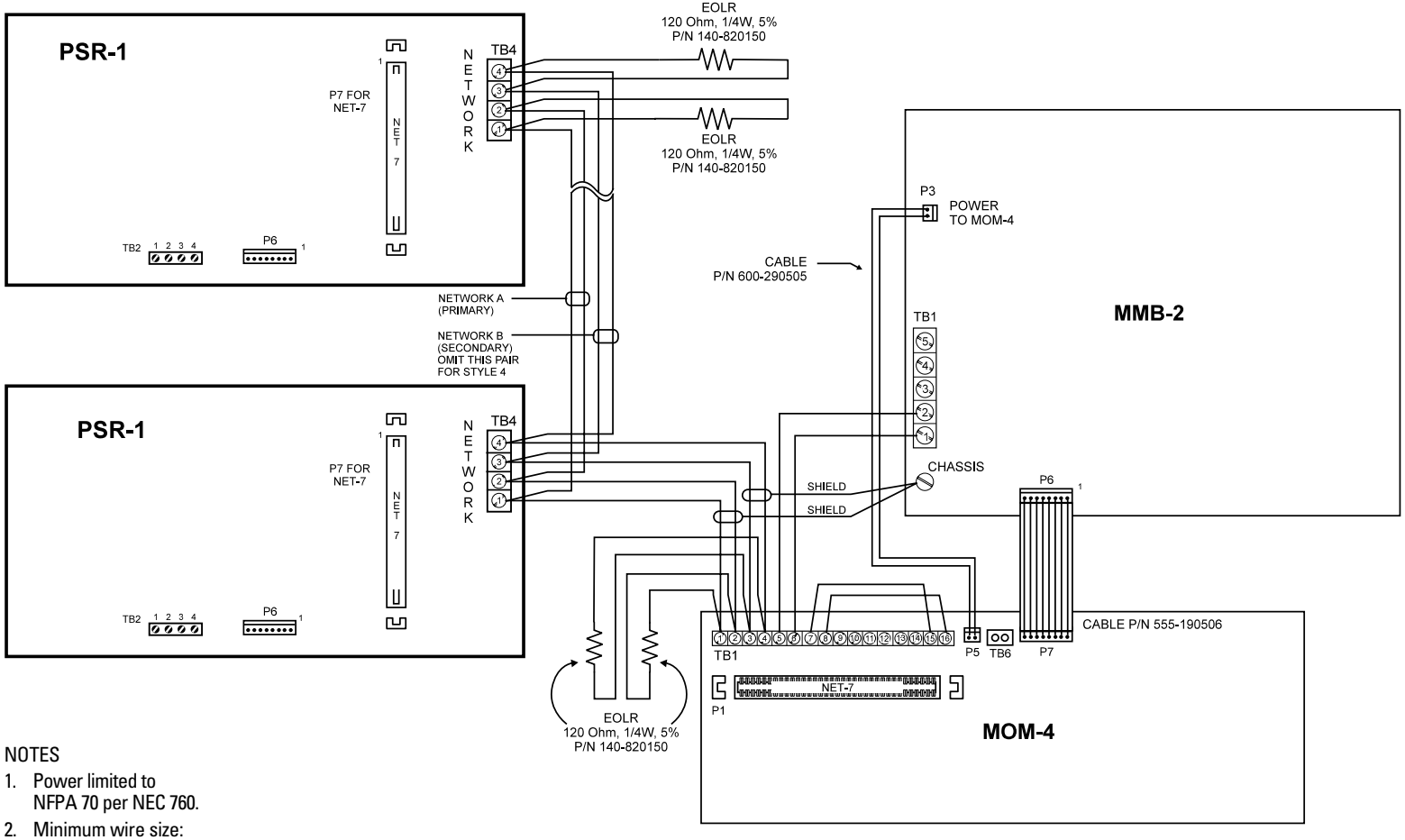


NOTES

1. Power limited to NFPA 70 per NEC 760.
2. Minimum wire size: 18 AWG.
3. Maximum resistance: 80 ohms total per pair.
4. Use twisted pair or shielded twisted pair.
5. Terminate the shield ONLY at the MMB-2 enclosure.
6. Maximum voltage: 8V P-P.
7. Maximum current: 150mA.
8. Each pair independently supervised.

**NET-7 Wiring**



Technical Manuals Online! - http://www.tech-man.com

# NET-7M

## Electrical ratings:

| | |
|---|---|
| Supervisory | 5V<br>120mA avg<br>140mA max |
| Alarm | 5V<br>120mA avg<br>140mA max |
| Battery | 24V<br>30mA |

NOTES

1. Power limited to NFPA 70 per NEC 760.
2. Minimum wire size: 18 AWG.
3. Maximum resistance: 80 ohms total per pair.
4. Use twisted pair or shielded twisted pair.
5. Terminate the shield ONLY at the MMB-1/-2 enclosure.
6. Maximum voltage: 8V P-P.
7. Maximum current: 150mA.
8. Each pair independently supervised.
9. NET-7M must not be at the end of the network.

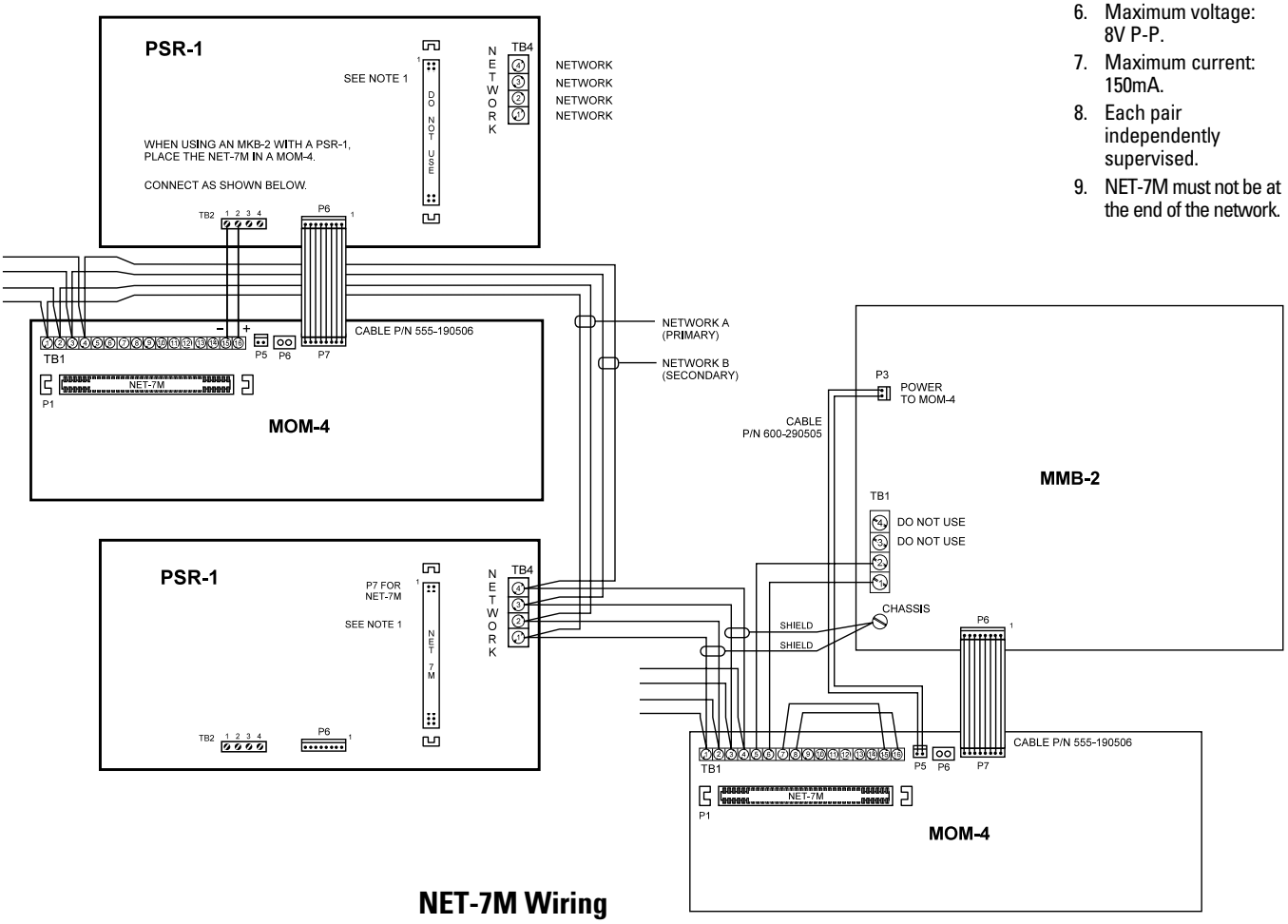


**NET-7M Wiring**



Technical Manuals Online! - http://www.tech-man.com

## Wiring

Two relays are provided on the PSR-1 for local control of alarm and trouble indication. These relays are controlled by the MXL through CSG-M output logic. The alarm relay transfers if the local alarm degrade signal is activated by an initiating control board (CZM-4 or ALD-2I). This occurs when the initiating board cannot communicate with the MXL. Likewise, if any local module, including the PSR-1, loses communication with the MXL, the trouble relay transfers. When the system is operating normally, these relays are controlled by output logic only.

## Auxiliary power for CZM-1B6 and PS-5A (TB3)

A Class A power limited output is provided on TB3, terminals 3-6 for use with the CZM-1B6, PS-5A and PS-5N7.

All wiring must be in accordance with article 760 of NEC and local building codes.

The power for CZM-1B6, PS-5A and PS-5N7 is power limited to NFPA 70 per NEC 760.

You may connect a maximum of 40 CZM-1B6s to the TB3 power source.

This power may be wired Class A, as shown. Class A wiring can support a maximum of 20 CZM-1B6s, 4 ohms max.

T-tapping is not allowed.

**Electrical ratings:**

18-31 VDC

2A max

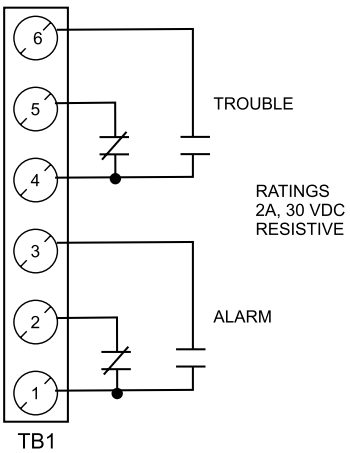


**Alarm and Trouble Relays Wiring**

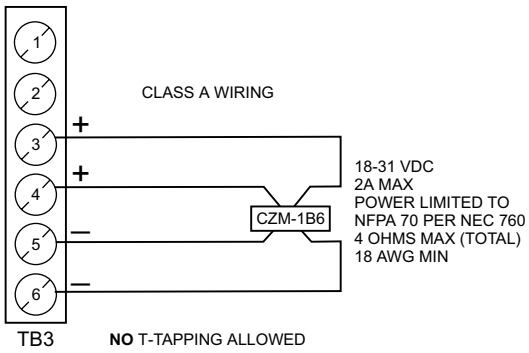


**CZM-1B6 Power, Class A Wiring**



Technical Manuals Online! - http://www.tech-man.com

Class B wiring can be used to obtain the maximum of 40 CZM-1B6s. Each Class B wire run can support a maximum of 20 CZM-1B6s, 4 ohms max. Multiple Class B power connections can be used if you do not exceed the ratings above (40 CZM-1B6s max and 4 ohms per run max). For example, you could have four individual Class B power runs, for a total of 40 devices (for example, 12, 8, 6, and 14 CZM-1B6s) with each of the four runs not exceeding 4 ohms resistance.

T-tapping is allowed, provided the total resistance of all wires does not exceed 4 ohms.

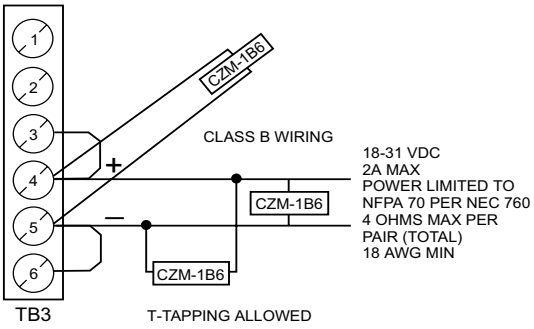


**CZM-1B6 Power, Class B Wiring**

The following figures show wiring instructions for the PS-5A:

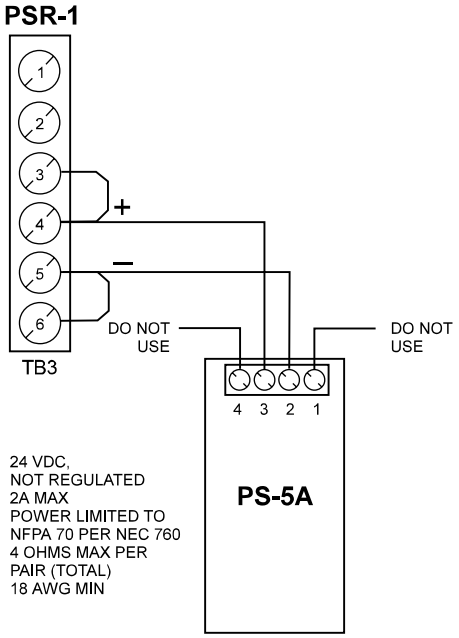


**PS-5A Power, Class A Wiring**

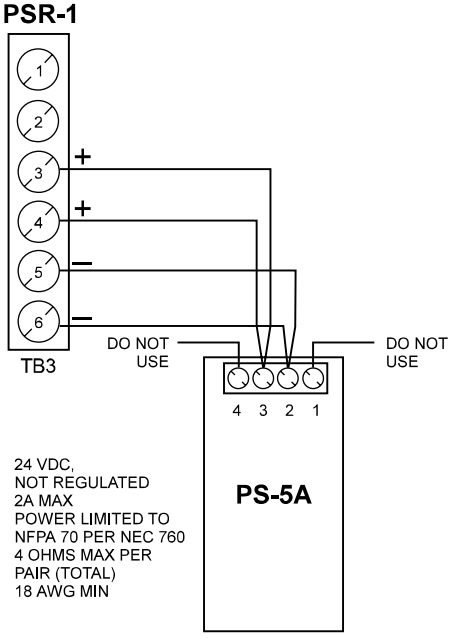


**PS-5A Power, Class B Wiring**



Technical Manuals Online! - http://www.tech-man.com

## MOM-4 Module Connection

P6 on the PSR-1 is the data and 5V connection for the MOM-4. Connect P6 on the PSR-1 to P7/P10 on the MOM-4 using the 8-conductor ribbon cable, P/N 555-190506, provided with the MOM-4.

A second auxiliary non-power limited output is provided on TB3 for the MOM-4 card cage. This output is rated at 6 amps (MPS-6/6W) or 12 amps (MPS-12/12W), 18-31 VDC. This 6 amp capacity must be de-rated by the current drawn by the CZM-1B6 and PS-5A power output. If the full 2 amp capacity of the CZM-1B6 and PS-5A output is used, the MOM-4 power must be derated to 4 amps (MPS -6/6W) or 10 amps (MPS-12/12W).

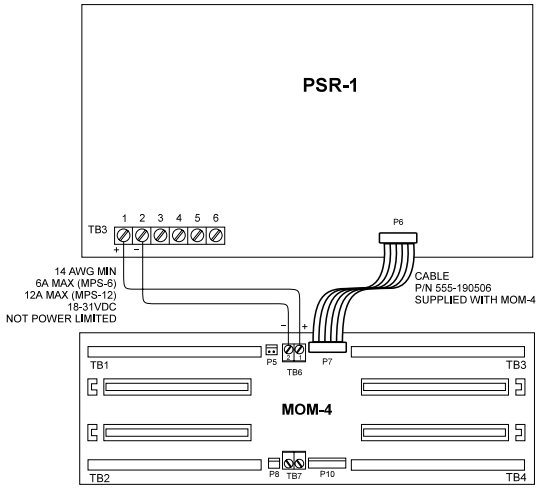


**MOM-4 Wiring**

## OMM-1 Module Connection

When using the PSR with MXLV modules, connect TB3-1 and TB3-2 on PSR to TB1 at the top of the OMM-1 on the far left. Refer to the *OMM-1 Installation Instructions*, P/N 315-090267 for further information.

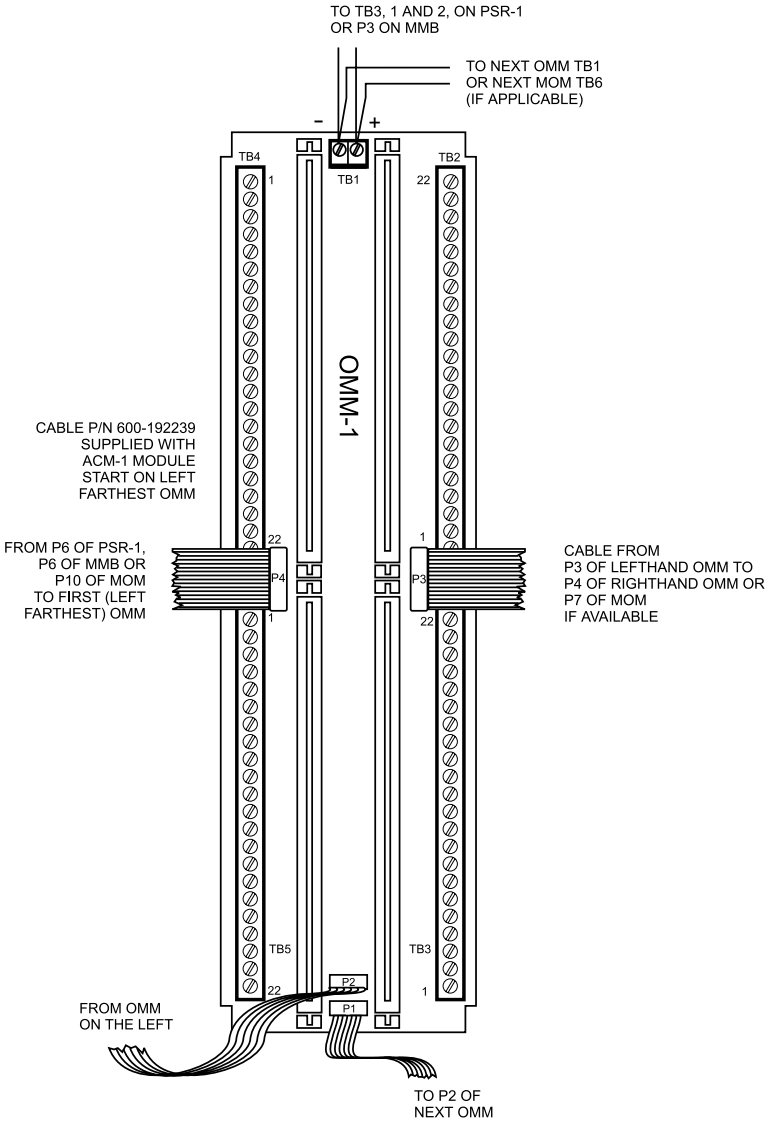


**OMM-1 Wiring**



Technical Manuals Online! - http://www.tech-man.com

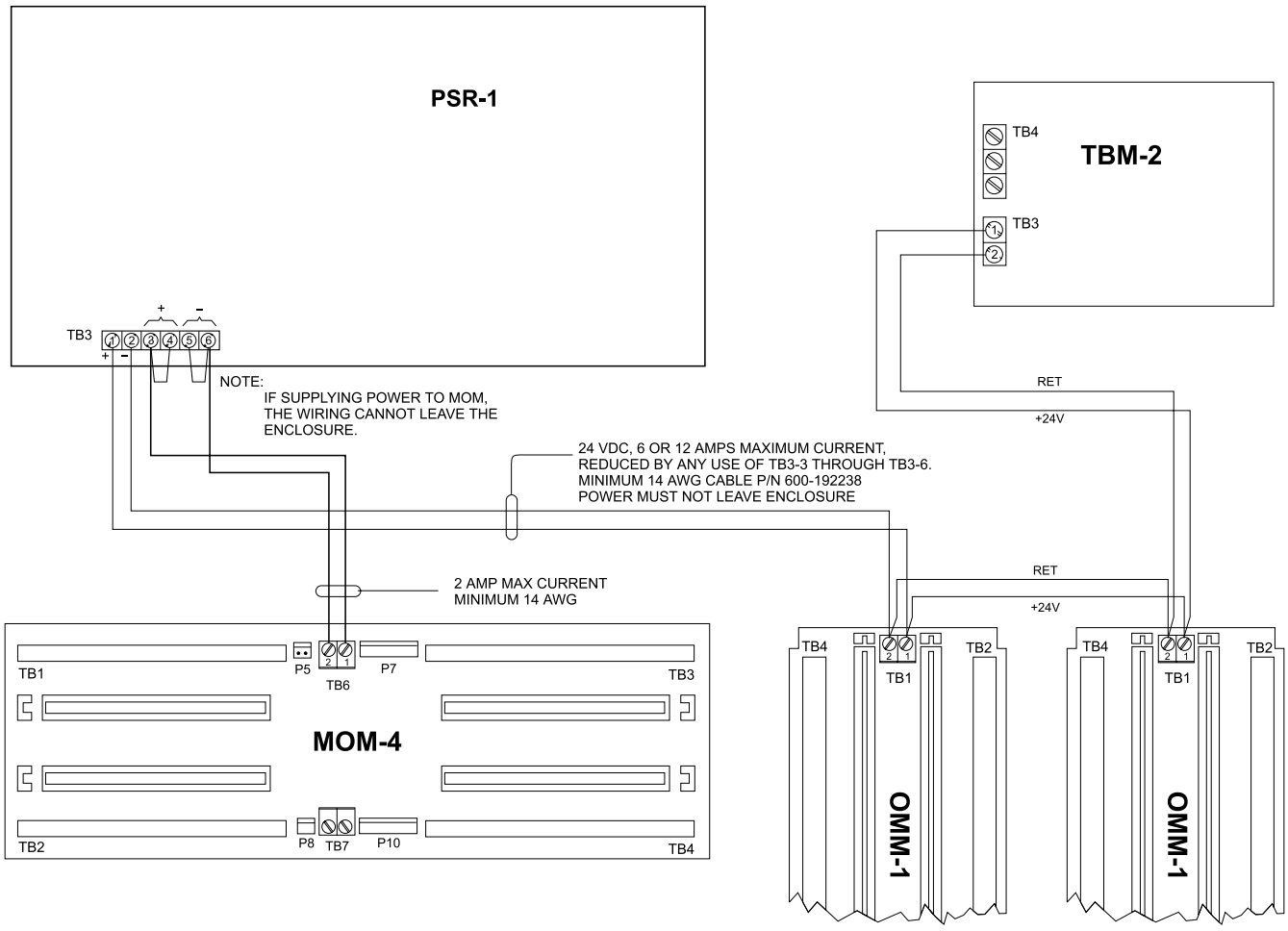


**OMM-1s, MOM-4s and PSR-1 Wiring**



Technical Manuals Online! - http://www.tech-man.com

# RCC-1/-1F Connections and Ratings

**Electrical ratings:**

| | |
|---|---|
| **RCC-1/-1F** | 14 to 31 VDC, 80mA max |
| Battery current | 75mA |
| **RCC-1/-1F with PIM-1** | 14 to 31 VDC, 100mA max |
| Battery current | 95mA |

All wiring must be in accordance with Article 760 of NEC and the local building codes.

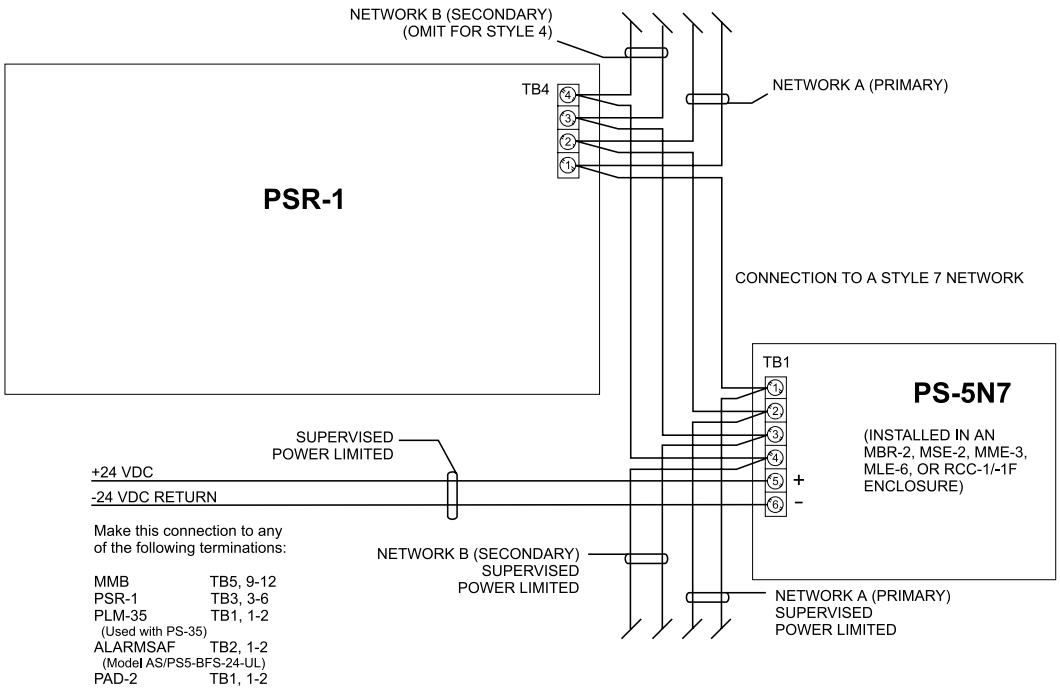


**PS-5N7 Power Supply and Network Wiring Diagram in RCC-1/-1F Enclosure**

NOTES

1. Power limited to NFPA 70 per NEC 760.
2. Minimum wire size: 18 AWG.
3. Maximum resistance: 80 ohms per pair of wires for the network connections.
4. Use shielded twisted pair for network connections.
5. Terminate the shield ONLY at the MMB enclosure.
6. Eliminate all Network B wiring for Style 4.
7. DO NOT place the PS-5N7 at the end of the network (Style 7 only).



Technical Manuals Online! - http://www.tech-man.com

Technical Manuals Online! - http://www.tech-man.com

# RCM-1 Connections and Ratings

**Electrical ratings:**

| | |
|---|---|
| Input voltage | 5V, 24V |
| Input current | 80mA at 5V<br>130mA at 24V |
| Battery Current | 150mA at 24 VDC |

The RCM-1 Riser Control module provides control and supervision of global paging risers in MXL voice networks. The RCM-1 is a double-width card and has 4 ports with the following inputs and outputs:

| PORT | STYLE | FUNCTION |
|---|---|---|
| A | 6 | Audio signal input |
| B | 4/7 | Audio signal input/output |
| C | 4 | Audio signal output |
| D | 6 | Audio signal output |

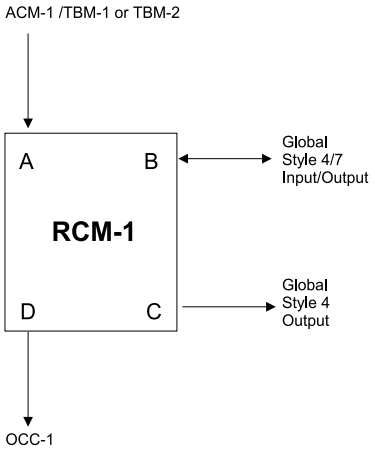


**RCM-1 Ports**

The RCM-1 supervises Port B for open and short circuits, reports by exception to the MXL, and isolates the fault.

Only one RCM-1 may be connected to the MXL. The module communicates with the MXL using the RS-485 MNET. If the RCM-1 detects that supervision is lost with the MXL, it will automatically switch to Local Mode.

If any copper wire pair leaves the building (Campus Configuration) the LLM-1 module must be used for transient protection (UL 1459). Refer to the *LLM-1 Installation Instructions*, P/N 315-093530.

## Modes of Operation

The RCM-1 can operate in the following modes:

- **Local Mode -** The audio from the local MXL (ACM) will be switched to local speaker zones (OCCs). The global audio riser will be switched to Port C, the Style 4 output riser.
- **Global Mode 1 -** The audio output from the local MXL is disconnected. The audio from the global riser is connected to the local speaker zones and to Port C, the Style 4 output riser.
- **Global Mode 2 -** The audio from the local system is connected to both the local speaker outputs and the global risers.



Technical Manuals Online! - http://www.tech-man.com

**RCM-1 APPLICATIONS**

| Application Number (See Corresponding Diagram) | Configuration |
|---|---|
| 1 | Typical Style 4 Installation |
| 2 | Style 4 Installation with a Style 4 Output Only Extension |
| 3 | Typical Style 7 Installation |
| 4 | Style 7 Installation with a Style 4 Extension |
| 5 | Style 4 Installation with Fiber Optic Transmission |
| 6 | Style 4 Fiber Optic with a Style 4 Fiber Optic Output Only Extension |
| 7 | Style 7 Fiber Connection with a Style 4 Output Only fiber Extension |
| 8 | Combination Wire and Fiber Installation |
| 9 | Style 4 Repeater Installation |

The RCM-1 can be connected in many different ways. The table to the left describes the various applications. The block diagrams that follow show the possible configurations.

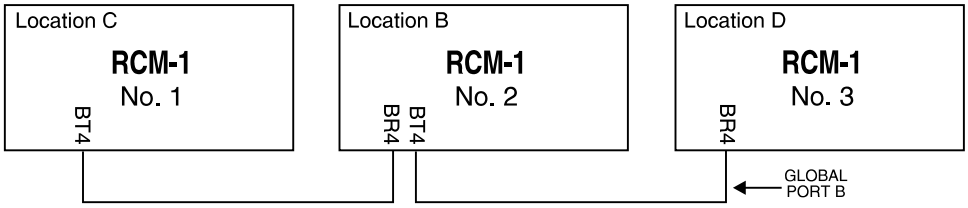


**Application 1: Typical Style 4 Installation**

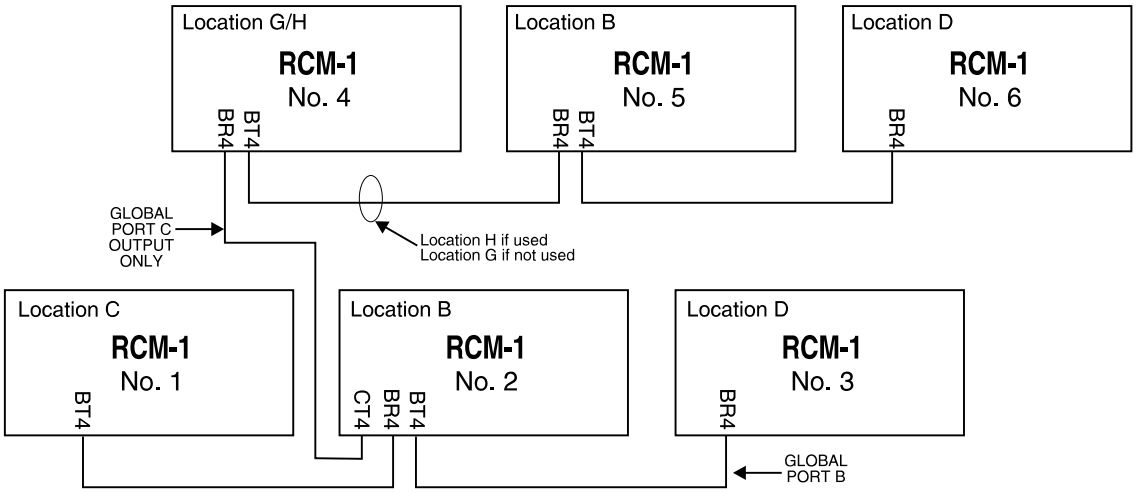


RCM-1 Nos. 4, 5, and 6 have local ACMs, but cannot output to the global bus — they can only receive.

**Application 2: Style 4 with a Style 4 Output Only Extension**



Technical Manuals Online! - http://www.tech-man.com

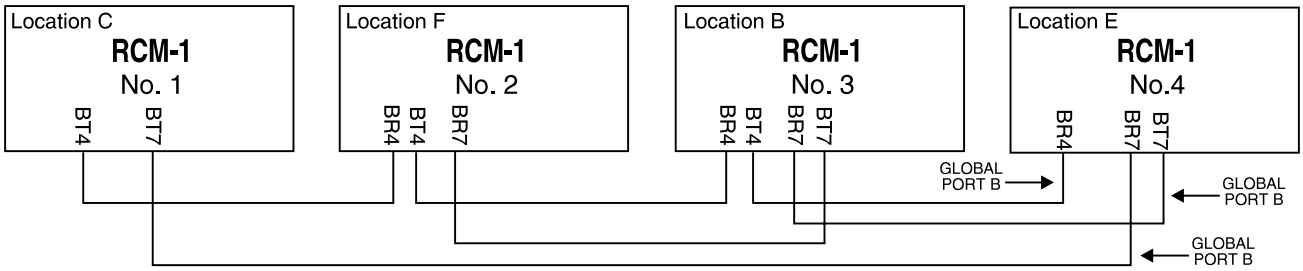


**Application 3: Typical Style 7 Installation**

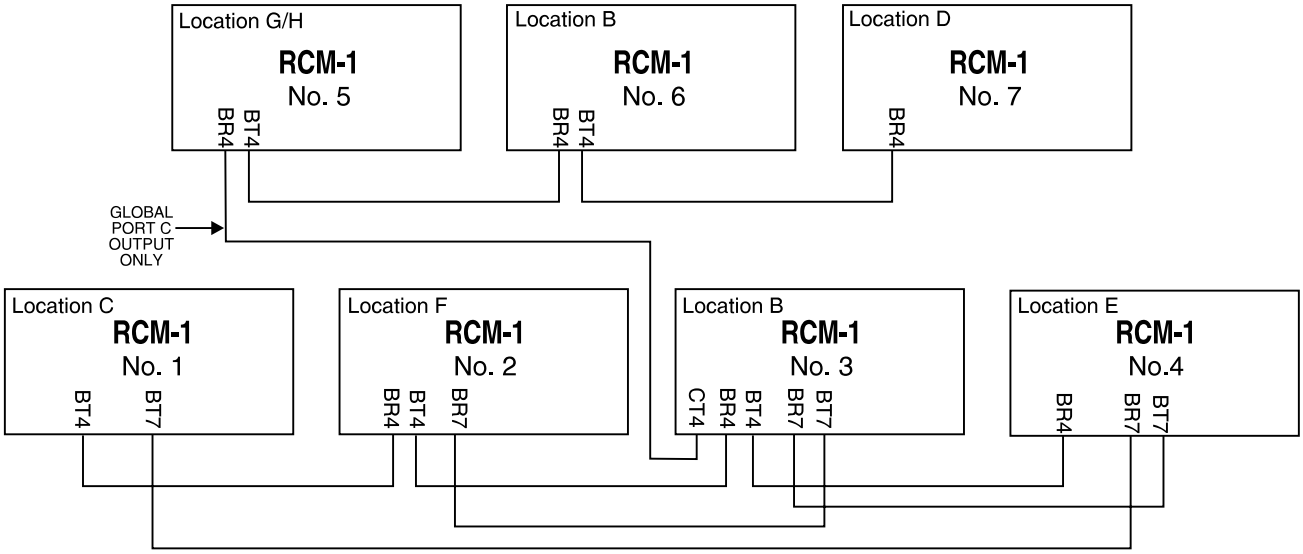


**Application 4: Style 7 with a PORT C Extension**

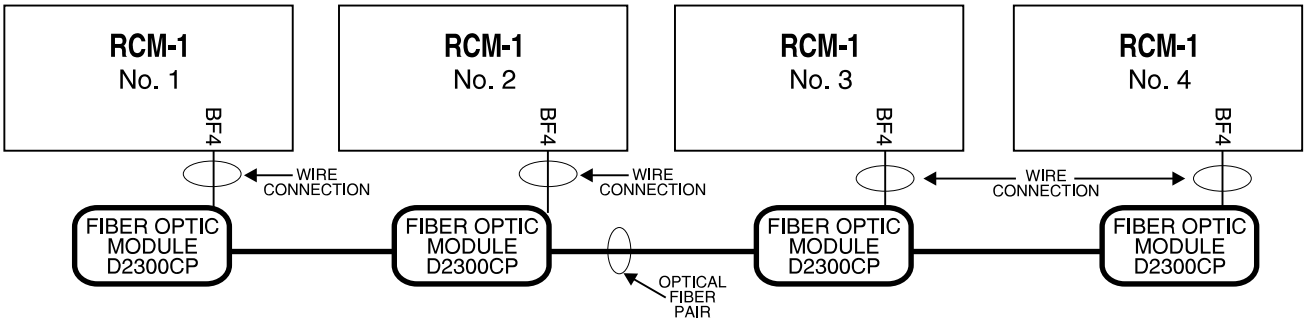


**Application 5: Style 4 Fiber Optic Installation**



Technical Manuals Online! - http://www.tech-man.com

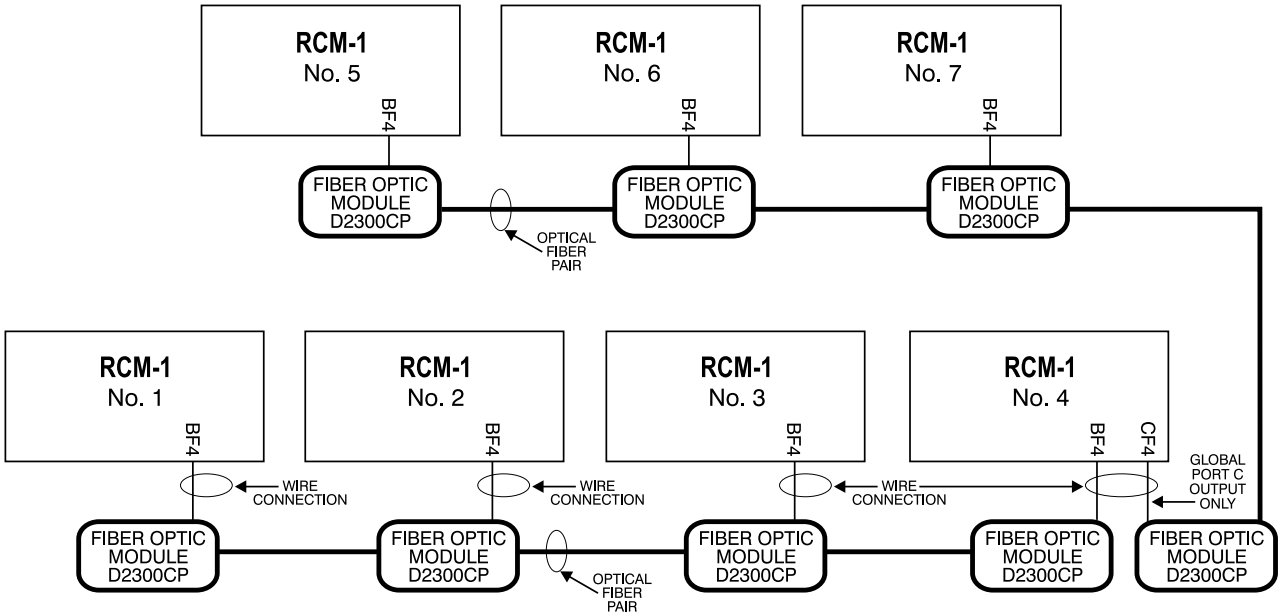


**Application 6: Style 4 Fiber Optic with a PORT C Fiber Optic Extension**

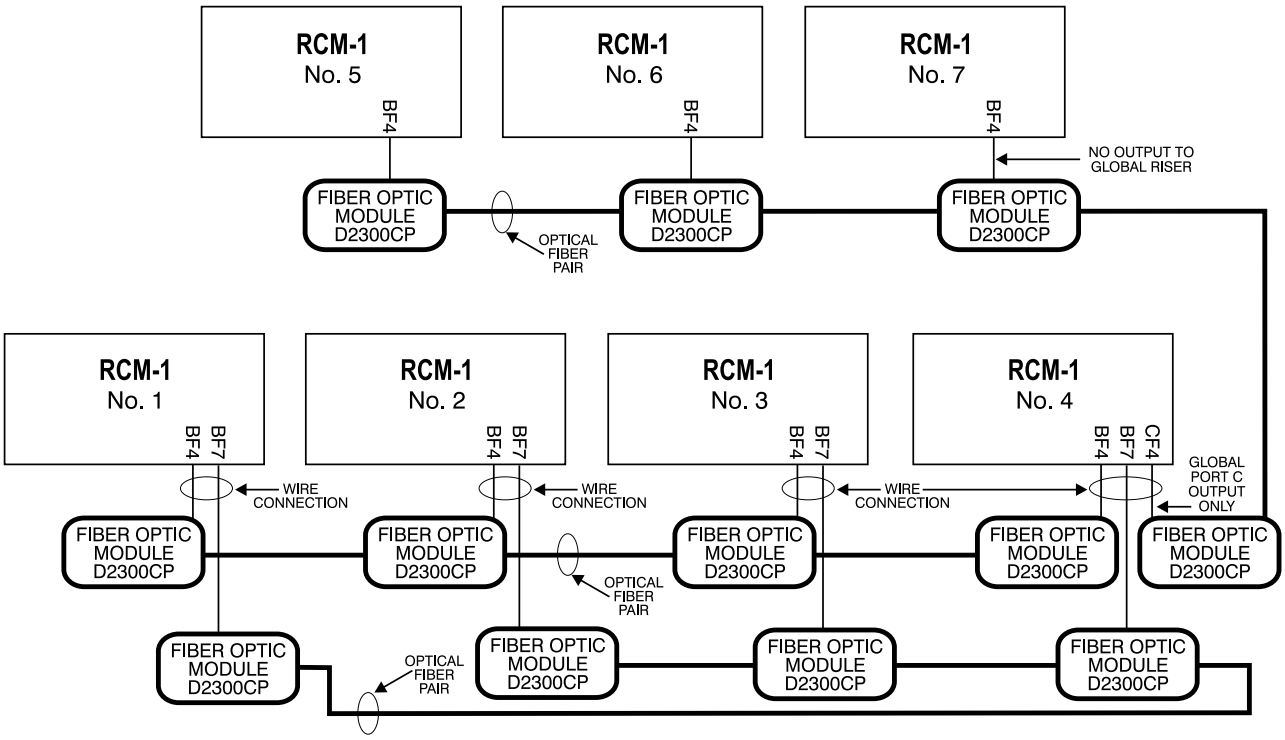


**Application 7: Style 7 Fiber Optic with a PORT C Fiber Optic Extension**



Technical Manuals Online! - http://www.tech-man.com

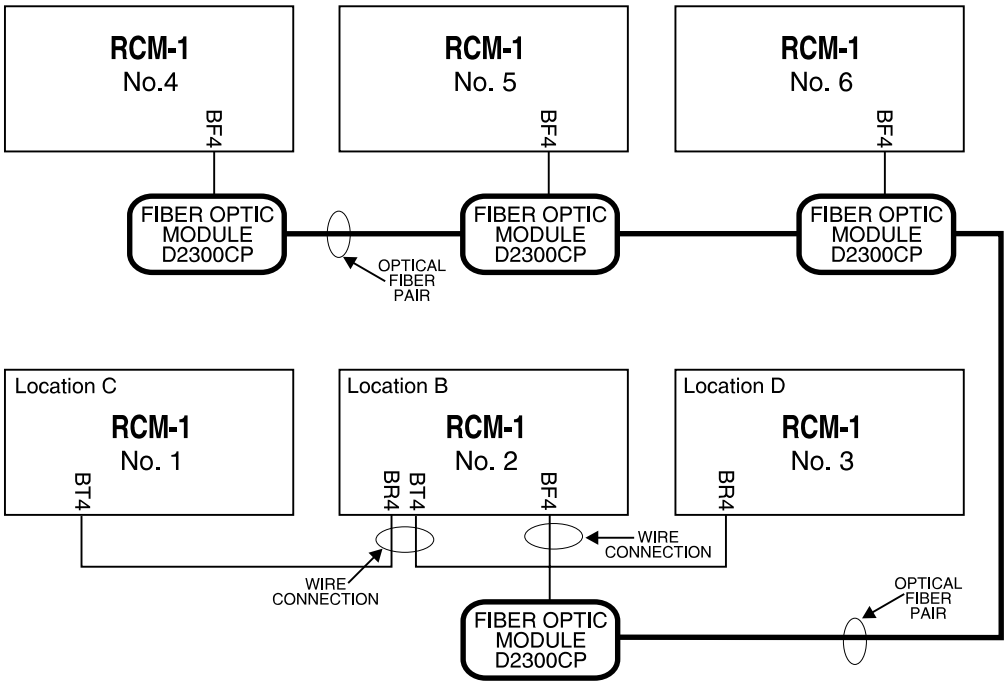


**Application 8: Combination Wire and Fiber Installation**

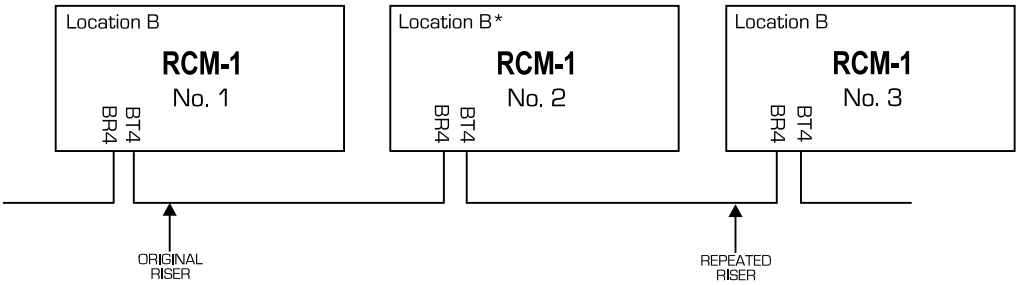


**Application 9: Style 4 Repeater Installation**



Technical Manuals Online! - http://www.tech-man.com

## Typical Style 4 connections

This is the basic configuration of the RCM-1. It allows multiple networked MXL voice systems to be connected together to act as one large integrated voice evacuation system.

**S2 SETTINGS**

| SW | Description | Location B | Location C | Location D |
|---|---|---|---|---|
| 1 | Copper config | off | on | off |
| 2 | Copper config | on | off | off |
| 3 | Copper config | on | on | on |
| 4 | Copper repeater | on | on | on |
| 5 | Fiber config | on | on | on |
| 6 | Fiber config | on | on | on |
| 7 | Style 7 | on | on | on |

NOTES

1. Use 18 AWG minimum wire.
2. Limit the maximum resistance of loop total from the first RCM to the last RCM to 100 ohms. Maximum line capacitance = 1µF.
3. The wiring is power limited to NFPA 70 per NEC 760.
4. Maximum voltage is 1.5V RMS.
5. Maximum current is 50mA.
6. Refer to wiring configurations for the OCC and ACM on page 4 - 102 for proper EOLR placement.

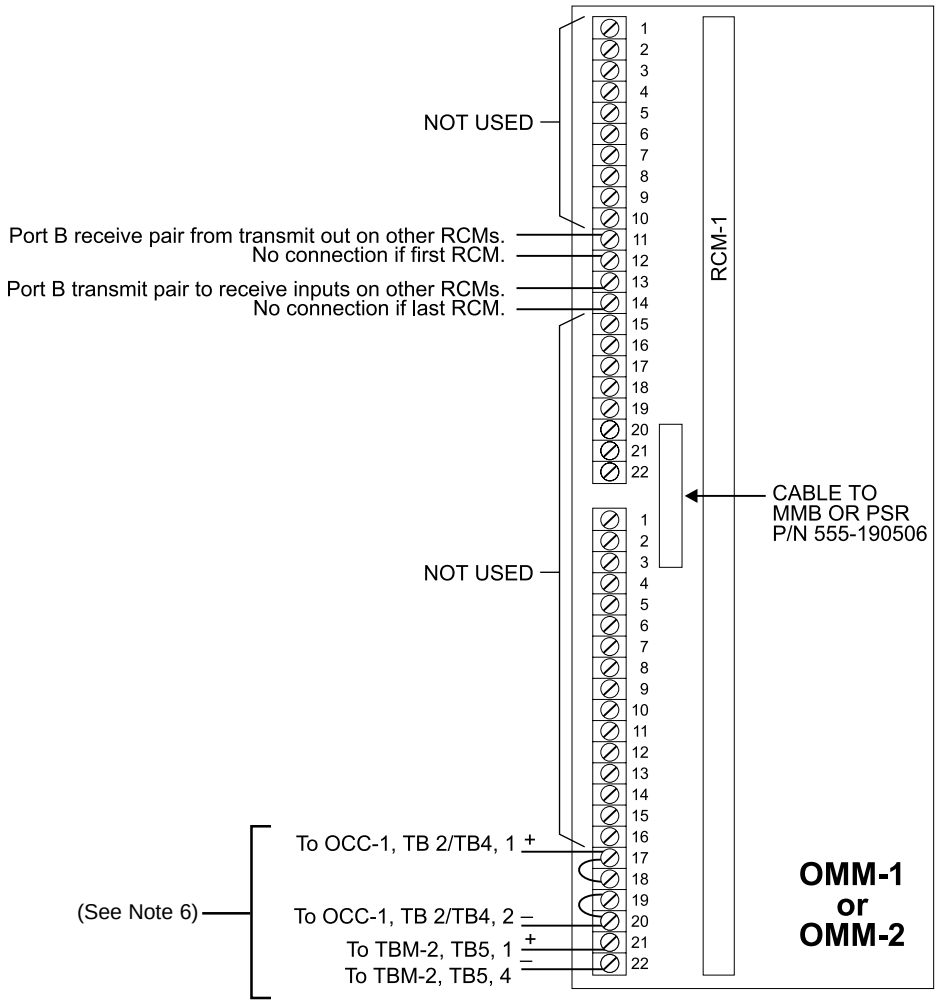


**Typical Style 4 Wiring**



Technical Manuals Online! - http://www.tech-man.com

## Typical Style 4 connections with PORT C extension

The RCM-1 provides a Style 4 output which can be used to connect to other systems which require global paging capability. A Style 4 output only (PORT C) extension is also supported.

**S2 SETTINGS**

| SW | Description | Location B | Location C | Location D | Location G | Location H |
|---|---|---|---|---|---|---|
| 1 | Copper config | off | on | off | on | off |
| 2 | Copper config | on | off | off | on | off |
| 3 | Copper config | on | on | on | on | off |
| 4 | Copper repeater | on | on | on | on | on |
| 5 | Fiber config | on | on | on | on | on |
| 6 | Fiber config | on | on | on | on | on |
| 7 | Style 7 | on | on | on | on | on |

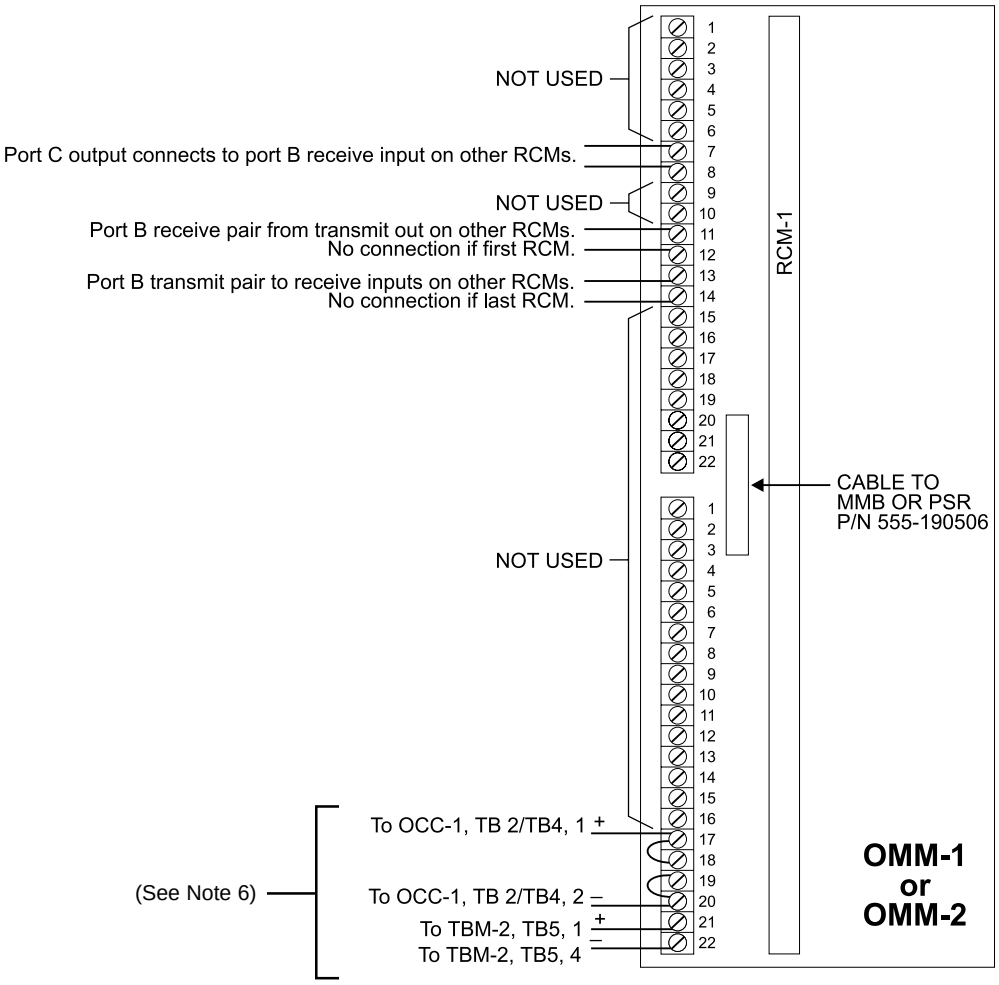


NOTES

1. Use 18 AWG minimum wire.
2. Limit the maximum resistance of loop total from the first RCM to the last RCM to 100 ohms. Maximum line capacitance = 1µF.
3. The wiring is power limited to NFPA 70 per NEC 760.
4. Maximum voltage is 1.5V RMS.
5. Maximum current is 50mA.
6. Refer to wiring configurations for the OCC and ACM on page 4 - 102 for proper EOLR placement.

**Typical Style 4 Wiring with PORT C Extension**



Technical Manuals Online! - http://www.tech-man.com

**S2 SETTINGS**

| SW | Description | Location B | Location C | Location E | Location F |
|---|---|---|---|---|---|
| 1 | Copper config | off | on | on | off |
| 2 | Copper config | on | off | on | on |
| 3 | Copper config | on | on | off | off |
| 4 | Copper repeater | on | on | on | on |
| 5 | Fiber config | on | on | on | on |
| 6 | Fiber config | on | on | on | on |
| 7 | Style 7 | off | off | off | on |

## Typical Style 7 connections

The RCM-1 provides a Style 7 output which can be used to connect to other systems which require global paging capability.

NOTES

1. Use 18 AWG minimum wire.
2. Limit the maximum resistance of loop total from the first RCM to the last RCM to 100 ohms. Maximum line capacitance = 1µF.
3. The wiring is power limited to NFPA 70 per NEC 760.
4. Maximum voltage is 1.5V RMS.
5. Maximum current is 50mA.
6. Refer to wiring configurations for the OCC and ACM on page 4 - 102 for proper EOLR placement.

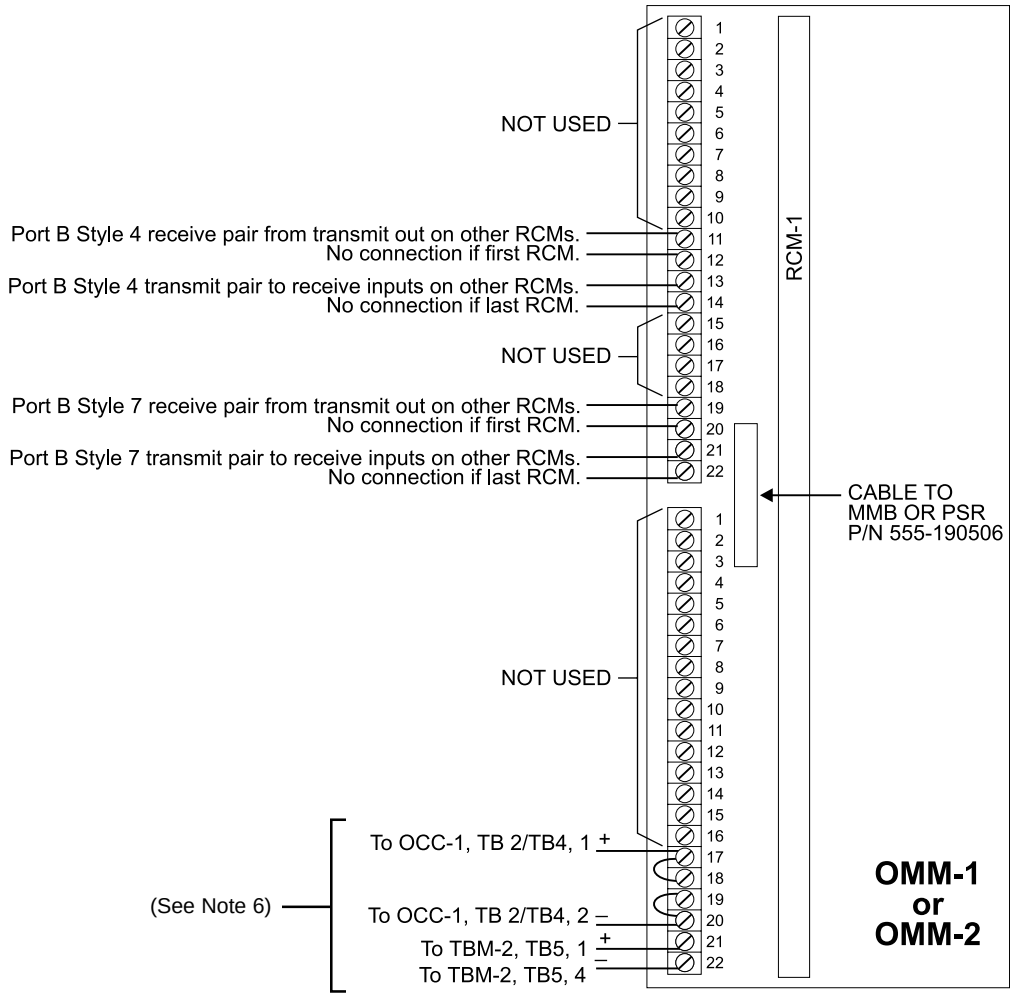


**Typical Style 7 Wiring**



Technical Manuals Online! - http://www.tech-man.com

## Style 7 connections with PORT C extension

The RCM-1 provides a Style 7 output which can be used to connect to other systems which require global paging capability. A Style 4 output only (PORT C) extension is also supported.

**S2 SETTINGS**

| SW | Description | Location B | Location C | Location E | Location F |
|---|---|---|---|---|---|
| 1 | Copper config | off | on | on | off |
| 2 | Copper config | on | off | on | off |
| 3 | Copper config | on | on | on | off |
| 4 | Copper repeater | on | on | on | on |
| 5 | Fiber config | on | on | on | on |
| 6 | Fiber config | on | on | on | on |
| 7 | Style 7 | off | off | on | on |

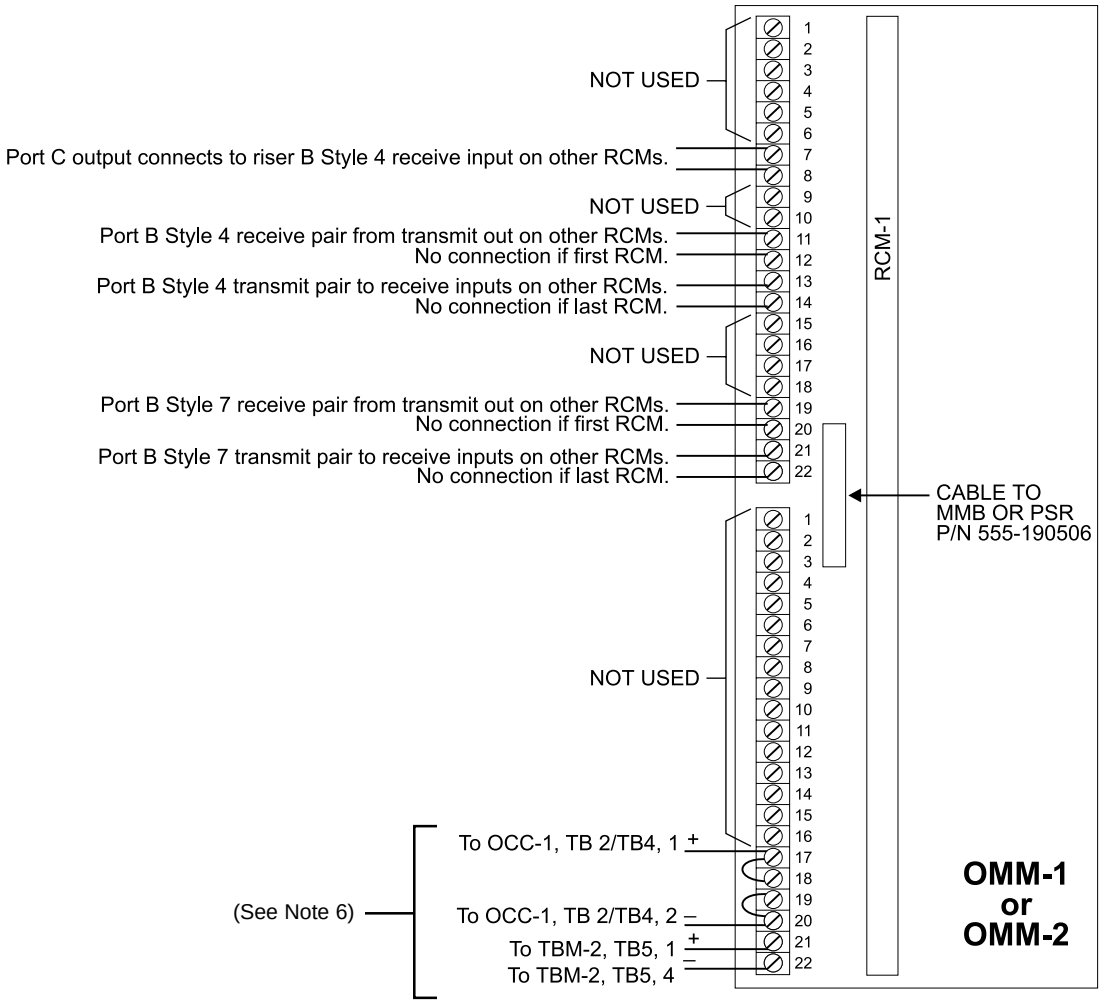


NOTES

1. Use 18 AWG minimum wire.
2. Limit the maximum resistance of loop total from the first RCM to the last RCM to 100 ohms. Maximum line capacitance = 1µF.
3. The wiring is power limited to NFPA 70 per NEC 760.
4. Maximum voltage is 1.5V RMS.
5. Maximum current is 50mA.
6. Refer to wiring configurations for the OCC and ACM on page 4 - 102 for proper EOLR placement.

**Style 7 with Style 4 Extension Wiring**



Technical Manuals Online! - http://www.tech-man.com

## Typical Style 4 fiber optic connections with optional PORT C extension -

The RCM-1 provides a Style 4 Fiber Optic output which can be used to connect to other systems which only require global voice output. A Style 4 Fiber Optic output only (PORT C) extension is also supported.

**S2 SETTINGS**

| SW | Description | As Shown |
|---|---|---|
| 1 | Copper config | on |
| 2 | Copper config | on |
| 3 | Copper config | on |
| 4 | Copper repeater | on |
| 5 | Fiber config | off |
| 6 | Fiber config | on |
| 7 | Style 7 | on |

NOTES

1. Use 18 AWG minimum wire.
2. Limit the maximum resistance of loop total from the first RCM to the last RCM to 100 ohms. Maximum line capacitance = 1µF.
3. The wiring is power limited to NFPA 70 per NEC 760.
4. Maximum voltage is 1.5V RMS.
5. Maximum current is 50mA.
6. Refer to wiring configurations for the OCC and ACM on page 4 - 102 for proper EOLR placement.

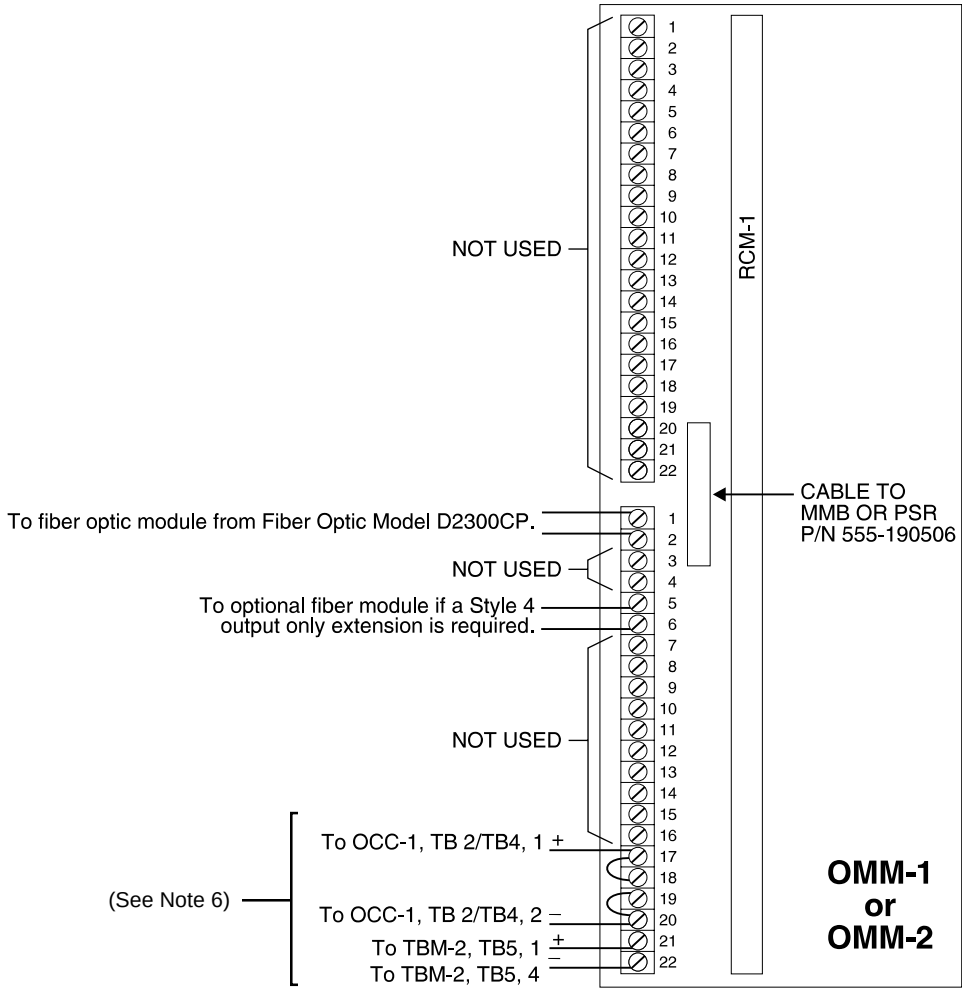


**Style 4 Fiber Optic Wiring with Optional PORT C Extension**



Technical Manuals Online! - http://www.tech-man.com

## Typical Style 7 fiber optic connections with optional PORT C extension -

The RCM-1 provides a Style 7 Fiber Optic output which can be used to connect to other systems which require global paging capability. A Style 4 Fiber Optic output only (PORT C) extension is also supported.

**S2 SETTINGS**

| SW | Description | As Shown |
|---|---|---|
| 1 | Copper config | on |
| 2 | Copper config | on |
| 3 | Copper config | on |
| 4 | Copper repeater | on |
| 5 | Fiber config | off |
| 6 | Fiber config | on |
| 7 | Style 7 | off |

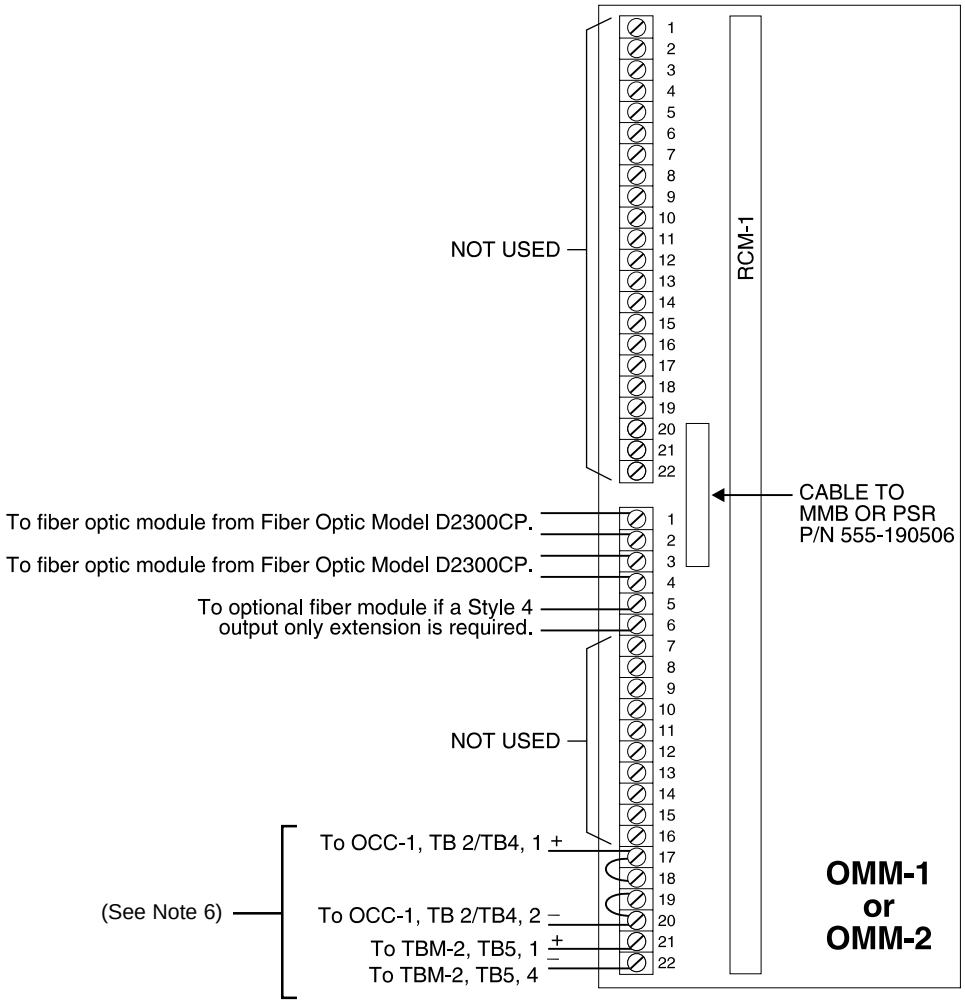


NOTES

1. Use 18 AWG minimum wire.
2. Limit the maximum resistance of loop total from the first RCM to the last RCM to 100 ohms. Maximum line capacitance = 1µF.
3. The wiring is power limited to NFPA 70 per NEC 760.
4. Maximum voltage is 1.5V RMS.
5. Maximum current is 50mA.
6. Refer to wiring configurations for the OCC and ACM on page 4 - 102 for proper EOLR placement.

**Style 7 Fiber Optic Wiring with Optional Style 4 Extension**



Technical Manuals Online! - http://www.tech-man.com

## Combination fiber and wire Style 4 connection

The RCM-1 can support a combination of fiber optics and wire which can be used to connect to other systems which require global paging capability.

**S2 SETTINGS**

| SW | Description | Location B | Location C | Location D |
|---|---|---|---|---|
| 1 | Copper config | off | on | off |
| 2 | Copper config | on | off | off |
| 3 | Copper config | on | on | on |
| 4 | Copper repeater | on | on | on |
| 5 | Fiber config | off | on | on |
| 6 | Fiber config | on | on | on |
| 7 | Style 7 | on | on | on |

NOTES

1. Use 18 AWG minimum wire.
2. Limit the maximum resistance of loop total from the first RCM to the last RCM to 100 ohms. Maximum line capacitance = 1µF.
3. The wiring is power limited to NFPA 70 per NEC 760.
4. Maximum voltage is 1.5V RMS.
5. Maximum current is 50mA.
6. Refer to wiring configurations for the OCC and ACM on page 4 - 102 for proper EOLR placement.

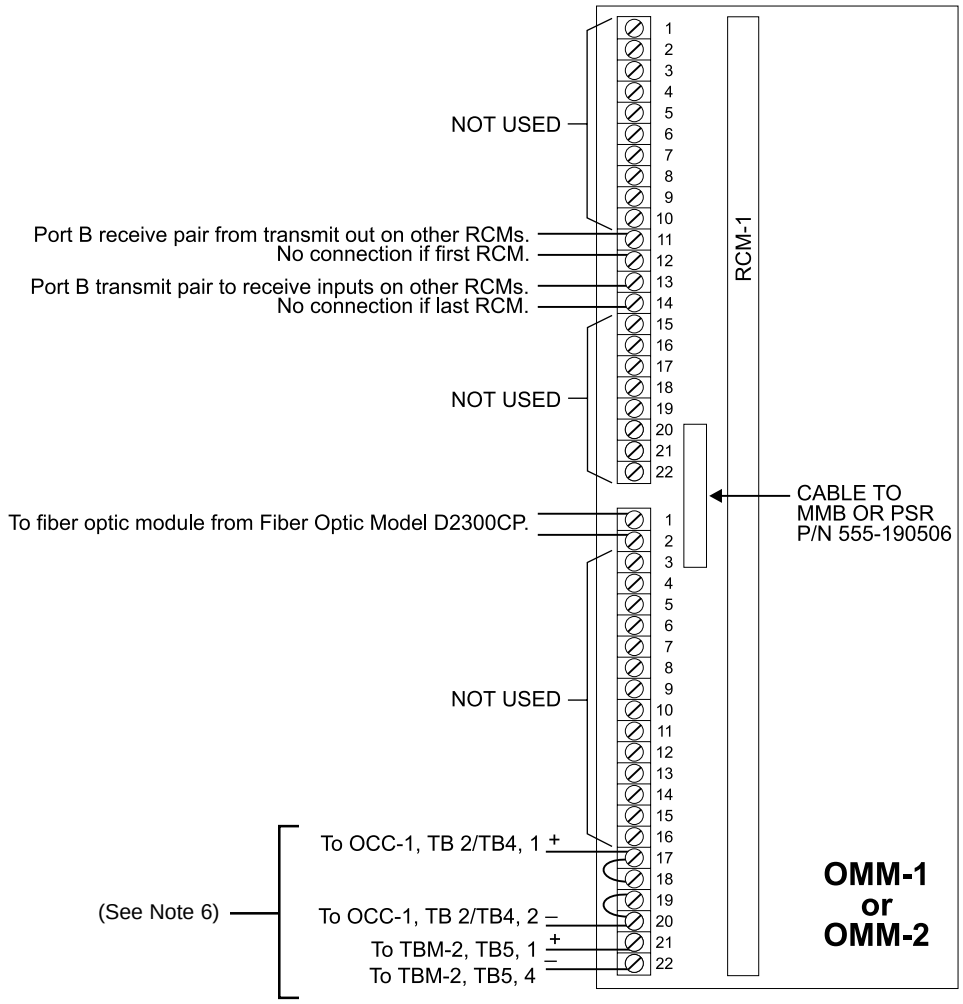


**Combination Fiber and Wire Connection**



Technical Manuals Online! - http://www.tech-man.com

## Style 4 Repeater Connection

The RCM-1 can be used as a repeater when the required global riser exceeds 100 ohms. Do not install more than two repeaters in any global riser.

**S2 SETTINGS**

| SW | Description | Location B | Location B[1] |
|---|---|---|---|
| 1 | Copper config | off | off |
| 2 | Copper config | on | on |
| 3 | Copper config | on | on |
| 4 | Copper repeater | on | off |
| 5 | Fiber config | on | on |
| 6 | Fiber config | on | on |
| 7 | Style 7 | on | on |

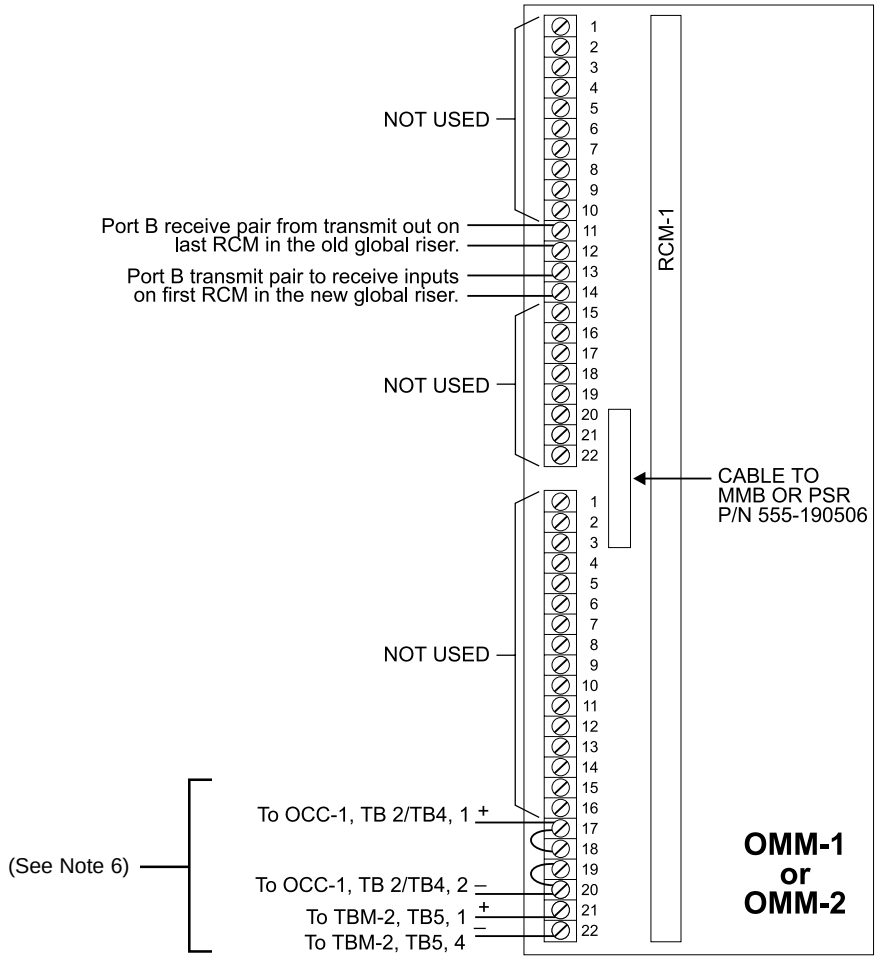


NOTES

1. Use 18 AWG minimum wire.
2. Limit the maximum resistance of loop total from the first RCM to the last RCM to 100 ohms. Maximum line capacitance = 1µF.
3. The wiring is power limited to NFPA 70 per NEC 760.
4. Maximum voltage is 1.5V RMS.
5. Maximum current is 50mA.
6. Refer to wiring configurations for the OCC and ACM on page 4 - 102 for proper EOLR placement.

**Riser Repeater Wiring**



Technical Manuals Online! - http://www.tech-man.com

## RCM Style 4 connections to the OCC

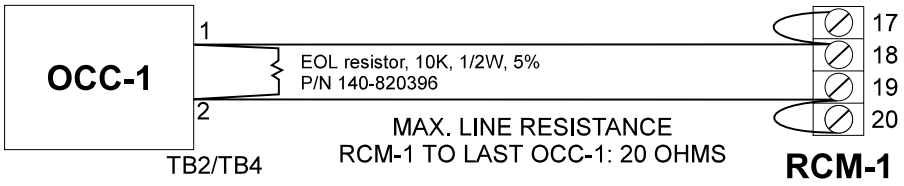


## RCM Style 6 connections to the OCC

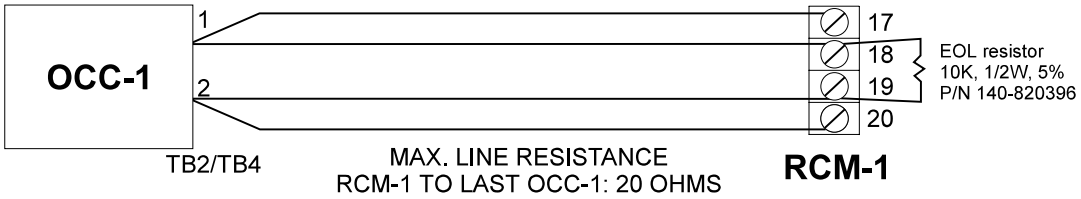


## RCM Style 4 connections to the ACM

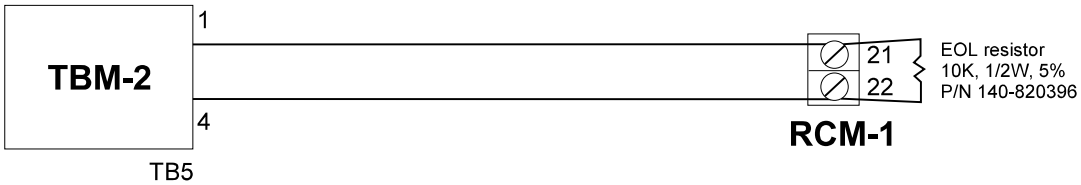


## RCM Style 6 connections to the ACM

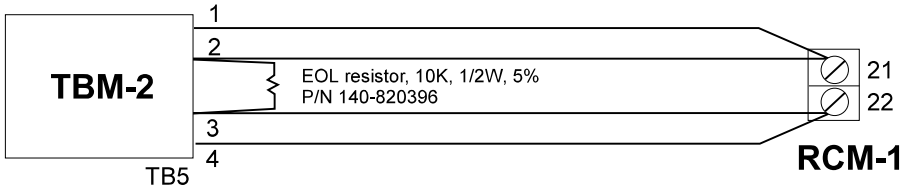


**Wiring Configurations for the OCC and ACM**



Technical Manuals Online! - http://www.tech-man.com

# REP-1 Connections and Ratings

**Electrical ratings:**

| | |
|---|---|
| Input voltage | 24 VDC |
| Input current | 40mA at 24 VDC |
| Battery Current | 40mA at 24 VDC |

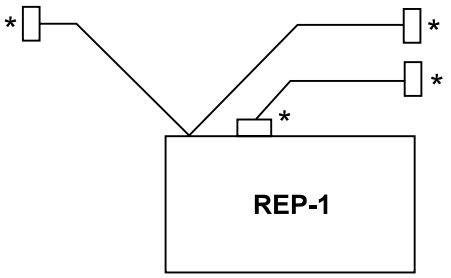


**T-Tap Running In One Direction with Style 4**

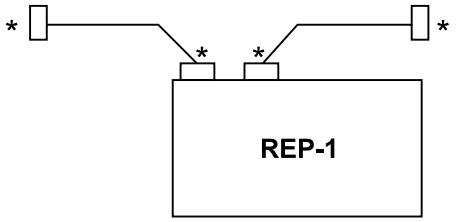


**Basic Repeater - Style 4**

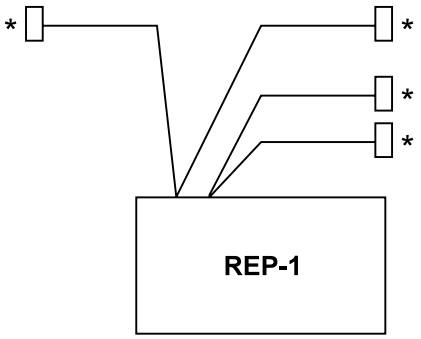


**T-Tap Running in Two Directions with Style 4**

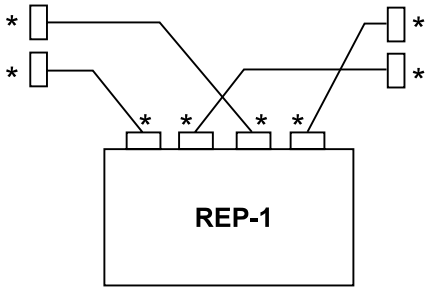


**Basic Repeater - Style 7**

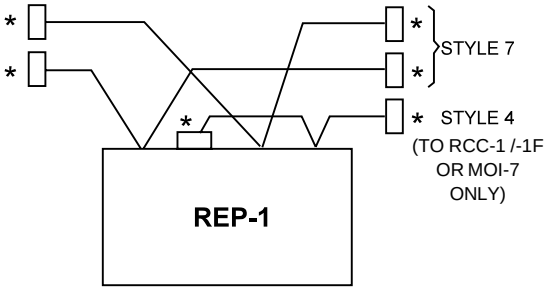


**Conversion From Style 7 to Style 4**

*Place a 120 ohm resistor, P/N 140-820150 where indicated

**REP-1 Basic Wiring (Including Placement of EOL Resistors)**



Technical Manuals Online! - http://www.tech-man.com

## Electrical connections:

A basic repeater connects to the network at the end of the run. A repeater can extend the distance of the network or can add more nodes to the system. If a basic repeater is in place, the original network ends at the REP-1 and is terminated with a 120 ohm resistor.

The new repeated network begins at the REP-1 and also has an end of line resistor. In a Style 4 network the second half of the REP-1 is not used, so it has both sides terminated. For Style 7 networks use both halves of the REP-1. For additional wiring information see the *REP-1 Installation Instructions,* P/N 315-092686.

NOTES
1. Power limited to NFPA 70 per NEC 760.
2. Minimum wire size: 18 AWG.
3. Maximum resistance: 80 ohms per pair.
4. Use twisted pair or shielded twisted pair
5. Terminate the shield ONLY at the MMB-1/2 enclosure.
6. Maximum voltage: 8V P-P.
7. Maximum current: 150mA.
8. Use the end of line resistor: P/N 140-820150 (120 ohms, ¼W).

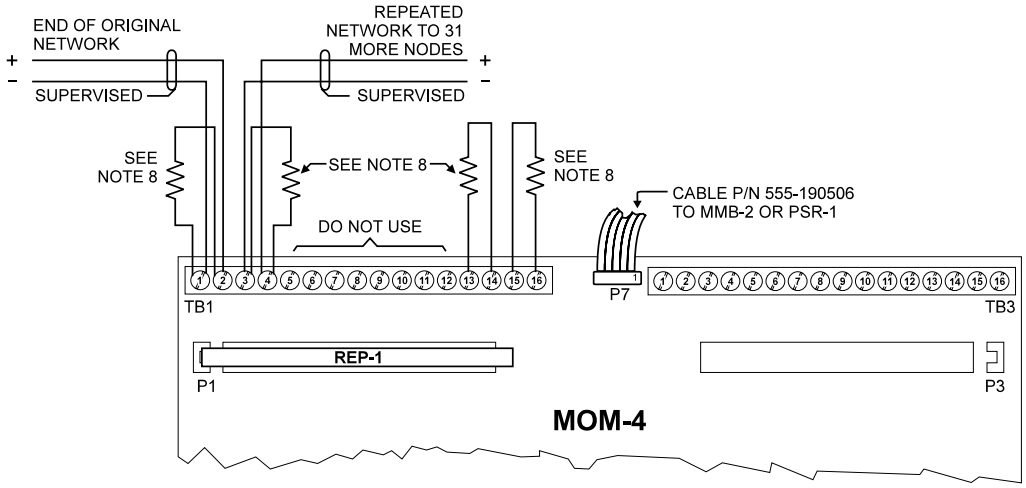


**Basic Repeater - Style 4 Wiring**

NOTES
1. Power limited to NFPA 70 per NEC 760.
2. Minimum wire size: 18 AWG.
3. Maximum resistance: 80 ohms per pair.
4. Use twisted pair or shielded twisted pair
5. Terminate the shield ONLY at the MMB-1/2 enclosure.
6. Maximum voltage: 8V P-P.
7. Maximum current: 150mA.
8. Use the end of line resistor: P/N 140-820150 (120 ohms, ¼W).

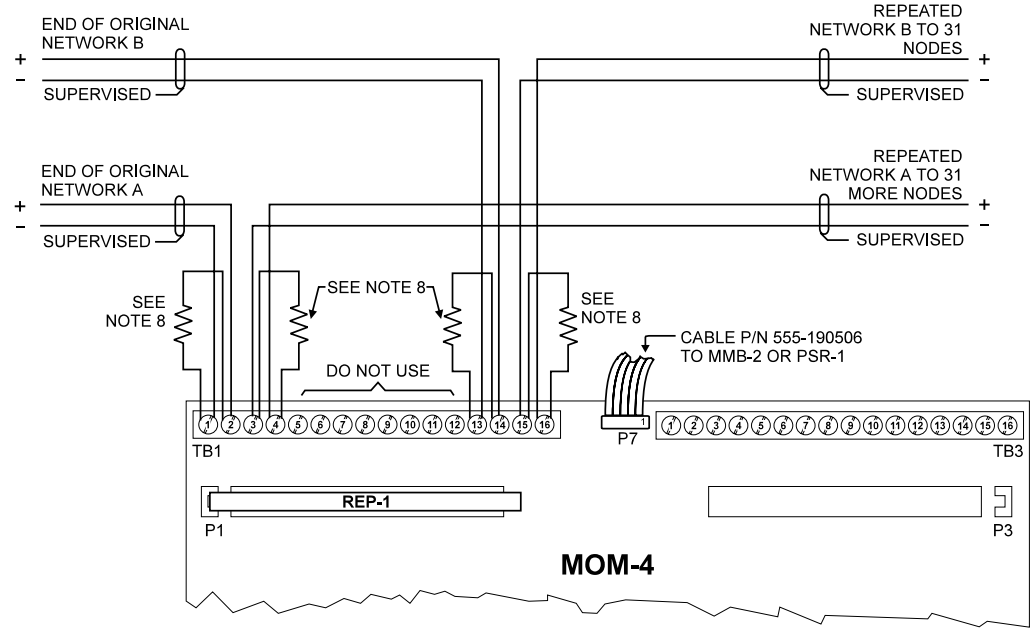


**Basic Repeater - Style 7 Wiring**



Technical Manuals Online! - http://www.tech-man.com

# Silent Knight Model 5128/5129 Connections and Ratings

**Electrical ratings:**

| | |
|---|---|
| Supervisory | 18-40 VDC<br>60mA |
| Alarm | 18-40 VDC<br>130mA |

**Electrical connections:**

The MXL Control Panel connects to the Silent Knight Model 5128/5129 Digital Fire Communicator using the Alarm, Trouble, and Supervisory dry contacts on the MXL Main Board.

Refer to the *Silent Knight 5128/5129 Fire Slave Communicator Installation Manual*, P/N 150805, provided with Silent Knight Model 5128/5129 for dialer instructions.

The Silent Knight Model 5128/5129 monitors all System troubles through the MXL trouble relay. The MXL delays the AC fail trouble signal in accordance with NFPA and UL requirements.

In NFPA 72 Remote Station install batteries to provide 60 hour standby capacity. For signalling service DACT wire according to the diagram on the following page.

In NFPA 72 Central Station connections AC fail reporting is delayed. The delay is 6 hours (25% of 24 hours) for NFPA, Local and Proprietary, and 15 hours (25% of 60 hours) for NFPA, Municipal Tie and Remote Station. Only the reporting of the trouble is delayed.

AC power must be present for a full minute before the system switches back to AC power from the battery.

Using the optional AC monitor input, the Silent Knight Model 5128/5129 monitors AC fail trouble. When the MXL System reports an AC fail trouble, the Silent Knight Model 5128/5129 sends a specific code to the Central Station that identifies the trouble as AC fail.



Technical Manuals Online! - http://www.tech-man.com

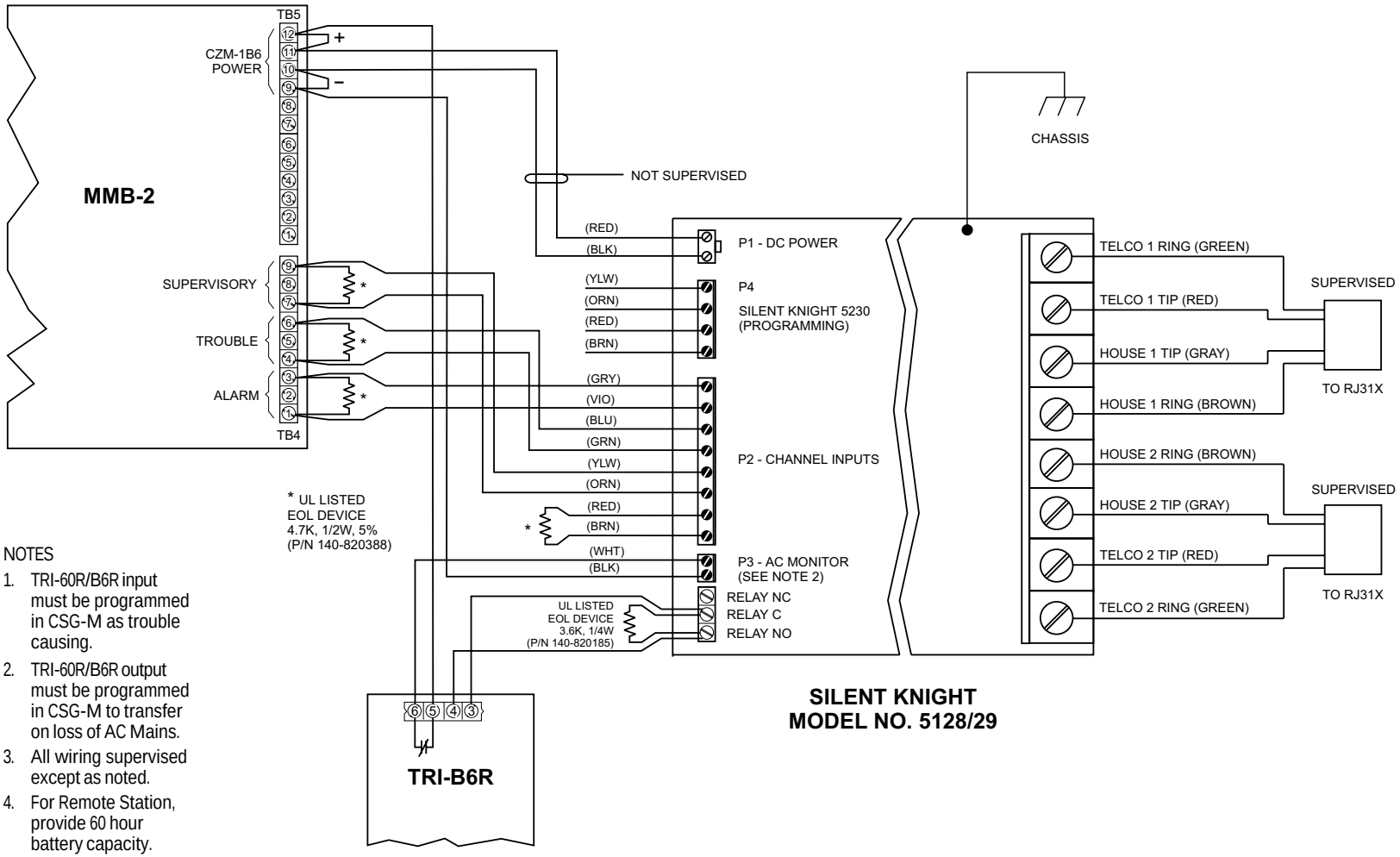


NOTES

1. TRI-60R/B6R input must be programmed in CSG-M as trouble causing.
2. TRI-60R/B6R output must be programmed in CSG-M to transfer on loss of AC Mains.
3. All wiring supervised except as noted.
4. For Remote Station, provide 60 hour battery capacity.

**MXL to Silent Knight Model 5128/5129 Wiring Diagram**



Technical Manuals Online! - http://www.tech-man.com

# TBM-2 Connections and Ratings

**Electrical ratings:**

For audio and telephone risers:

Maximum wire size:
14 AWG twisted pair, shielded

Minimum wire size:
18 AWG twisted pair, shielded

Maximum loop resistance:
20 ohms for all wires

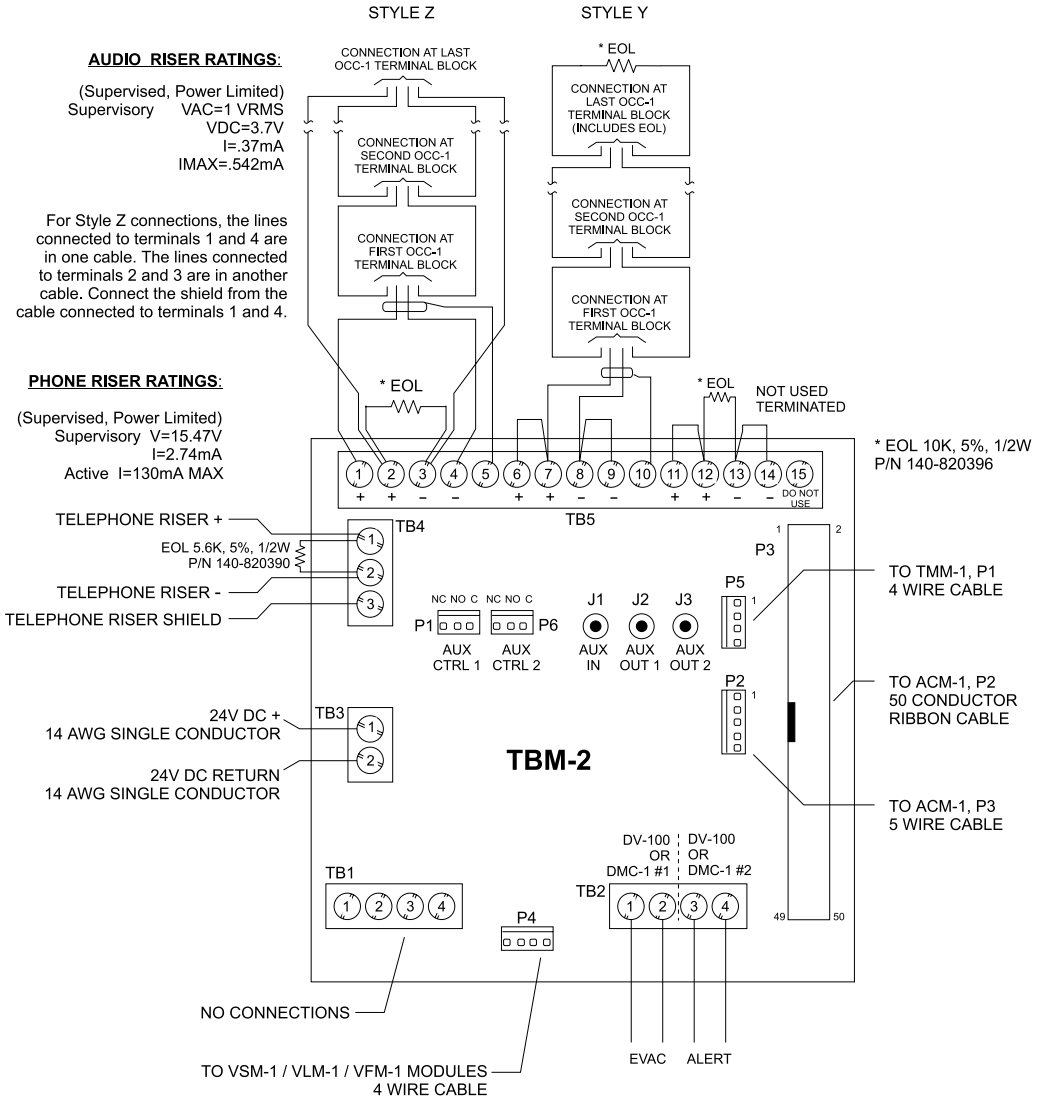


**TBM-2 Wiring Diagram (with MMB or PSR)**

NOTES

1. All wiring must be in accordance with Article 760 of NEC or the local buidling codes.
2. For all Audio and Telephone Risers:
   Maximum Loop Resistance: 20 ohms
   Minimum Wire Size: 18 AWG twisted pair, shielded
   Maximum Wire Size: 14 AWG twisted pair, shielded
3. Input impedance of AUX IN is 3K ohms, 200mV RMS.
   - The signal source must have isolation using a transformer.
4. The load impedance for AUX OUT must not be less than 10K ohms, 200mV RMS.
   - The load must have isolation using a transformer.
5. SPDT contacts activate when audio is present on AUX OUT jacks based on the CSG-M selection of microphone or telephone. Contact ratings: 0.3A at 24 VDC
   - If AUX OUT 1 is microphone, then AUX OUT 2 is telephone.
   - If AUX OUT 1 is telephone, then AUX OUT 2 is microphone.



Technical Manuals Online! - http://www.tech-man.com

All wiring must be in accordance with Article 760 of NEC or the local building codes.

## Electrical connections:

Connect the 24 VDC to TB3 using 14 AWG single conductor wire. Terminal 1 is for +24 VDC; terminal 2 is for 24 VDC return.

Refer to the CSG-M configuration printout to determine the wiring style, either Class B (Style Y) or Class A (Style Z) for terminal block TB5.

### For Style Z wiring

Connect terminals 1 and 4 in one cable going out to Riser 1.

Connect terminals 2 and 3 in another cable coming back from the last destination of Riser 1.

The other audio risers connect in a similar fashion.

### Style Y connections

Use only one cable.

Connect the riser cables to TB5 in the desired style, using 18-14 AWG twisted, shielded pair. The other ends of the risers connect to the OCC-1 terminal block. Refer to the *OCC-1 Installation Instructions*, P/N 315-090918, for further details.

For connections to other connectors and terminal blocks, refer to the appropriate module installation instructions.

WARNING
The user must comply with AUX IN and AUX OUT specifications or the MXLV System may not function properly. Always complete the full system test to ensure that all applications function completely.

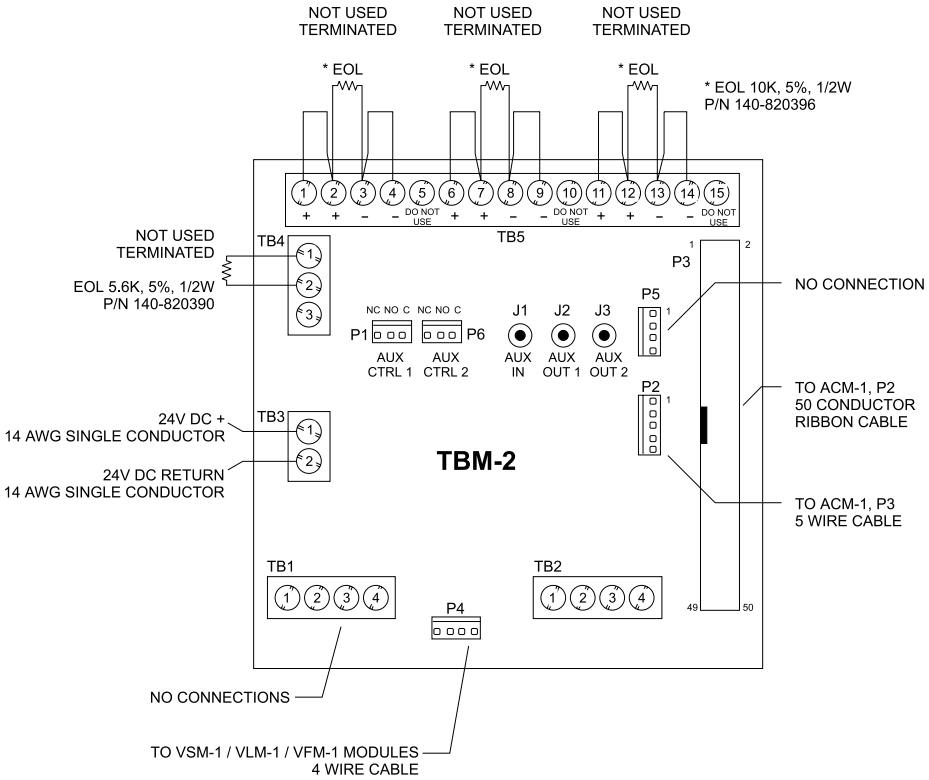


NOTES
1. All wiring must be in accordance with Article 760 of NEC or the local building codes.

**TBM-2 Wiring in an Expander Enclosure**



Technical Manuals Online! - http://www.tech-man.com

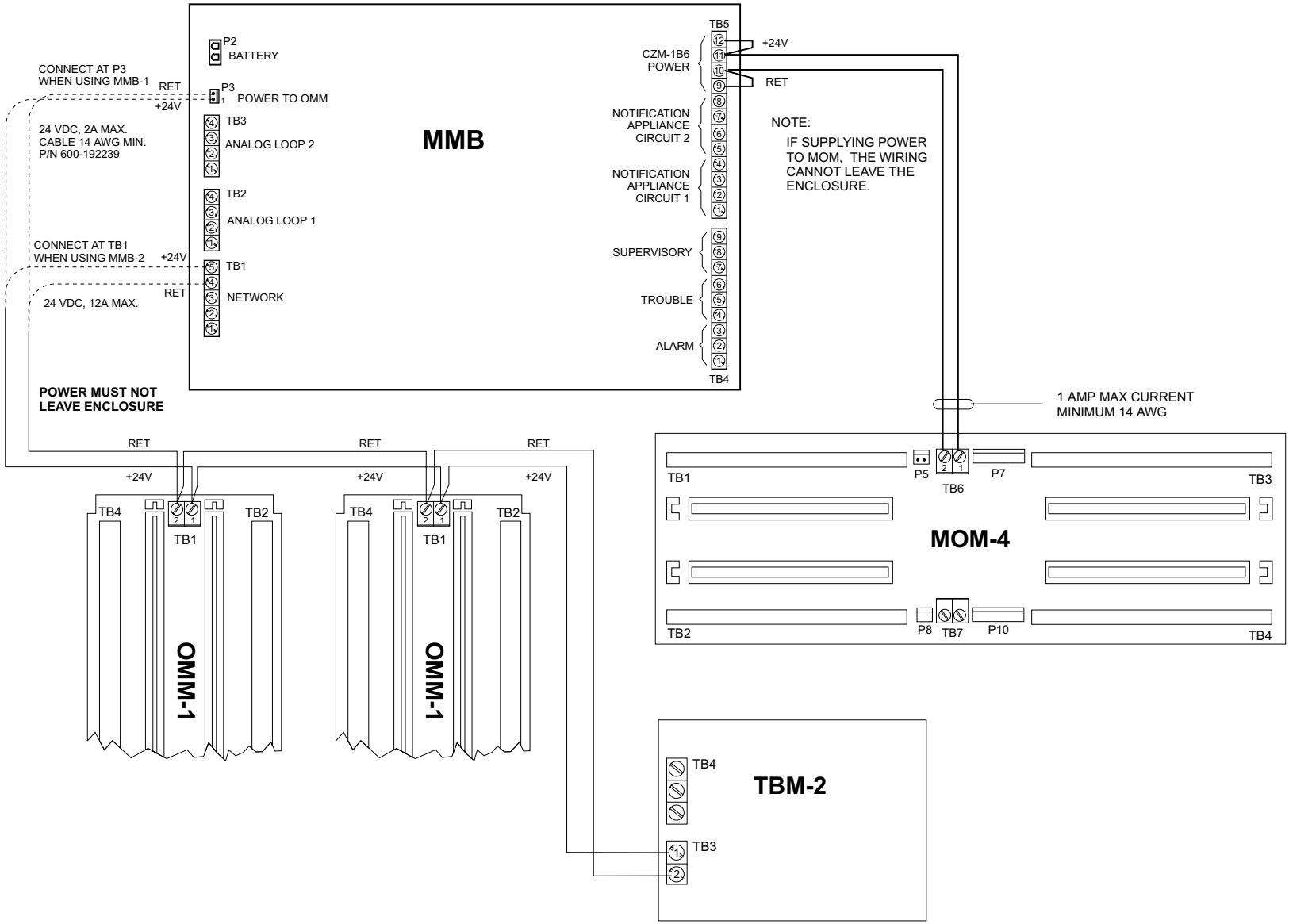


**24V Primary Power Supply Wiring Diagram**



Technical Manuals Online! - http://www.tech-man.com

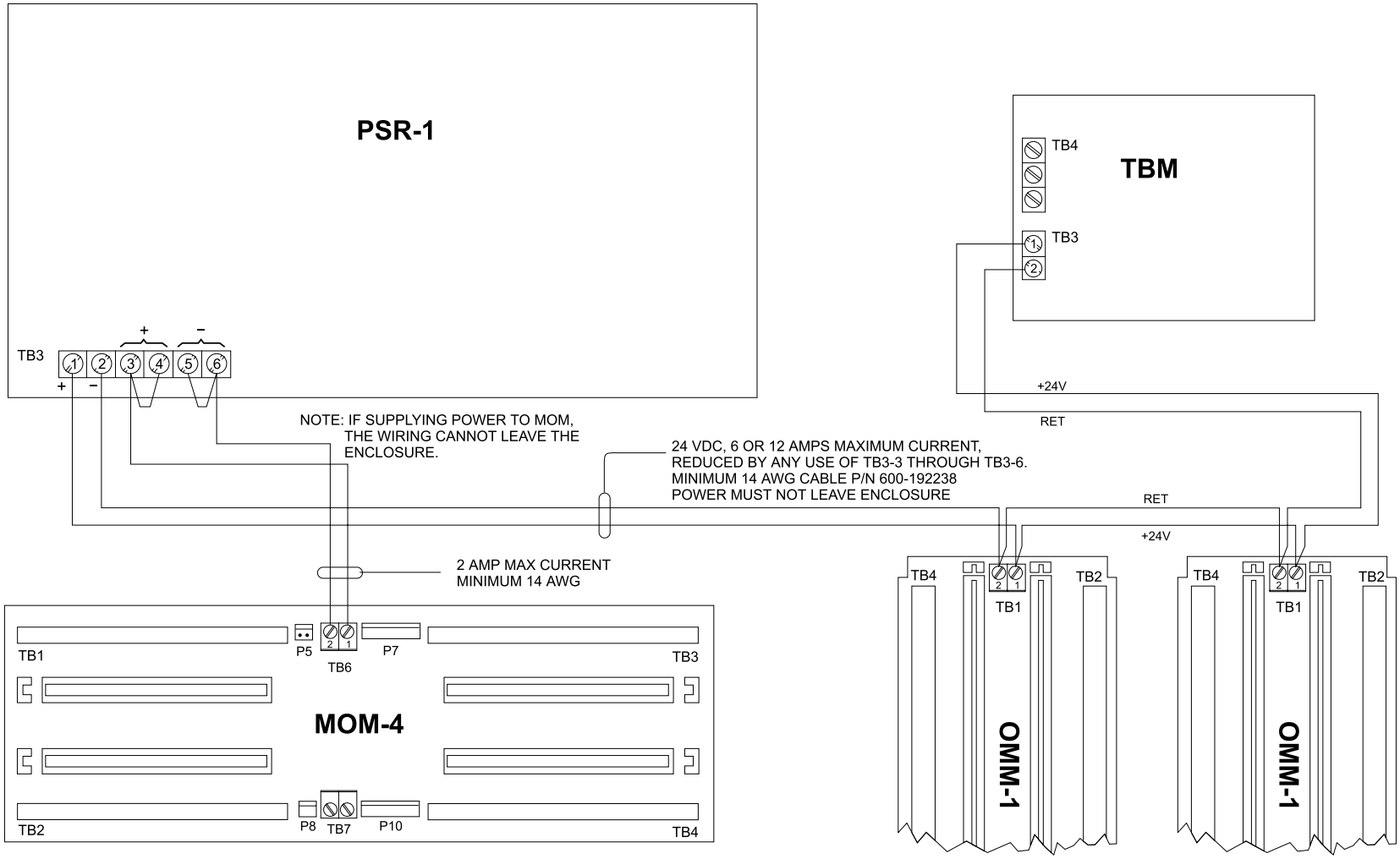


**24V Remote Power Supply Wiring Diagram**



Technical Manuals Online! - http://www.tech-man.com

# VSM-1, VLM-1 and VFM-1 Connections and Ratings

**Electrical ratings:**

| | |
|---|---|
| VSM-1/VLM-1 | 24 VDC, 160mA max |
| VFM-1 | 24 VDC, 90mA max |

All wiring must be in accordance with Article 760 of NEC and the local building codes.

**Electrical connections:**

Open the MHD panels so that you are looking at the back of the VSM-1s, VLM-1s, and VFM-1s.

Connect the VSM-1/VLM-1/VFM-1 modules together with the cables provided. ***The cables are polarized; do not force them.***

1. Start with the VSM-1/VLM-1/VFM-1 module at the far right on the top row.
2. Connect P1 of the first module to P2 of the module to its left, using the cable with the 4 inch wires, P/N 600-192237. Continue in the same manner until all the VSM-1/VLM-1/VFM-1 modules in the row are connected.
3. Connect the cables on the lower row in the same way if any VSM-1/VLM-1/VFM-1 modules are there.
4. Connect P1 of the module on the far left of the top row to P2 of the module on the far right of the bottom row. Use the 40-inch cable, Model MRRC-1 (P/N 600-192106), which is ordered separately. If the lower row has no modules mounted in it, omit this step.
5. **With an MMB or PSR:**

   Connect P2 of the VSM-1/VLM-1/VFM-1 module at the far left (back view) in the top row to P4 of the TBM-2 Termination Block module, using the 4 foot cable, P/N 600-192258. ***The cables are polarized; do not force them.***

**NOTE:** The TBM-2 module is located in the enclosure on the right side next to the MMB-1/-2 or the PSR-1.

**In a Remote Expander enclosure with a PS-5N7 used instead of an MMB-1/-2 or PSR-1:**

Connect P2 of the VSM-1/VLM-1/VFM-1 module at the far right in the top row to P4 of the TBM-2, using the 4 foot cable, P/N 600-192258. ***The cables are polarized; do not force them.***



Technical Manuals Online! - http://www.tech-man.com

**NOTE:**
The TBM-2 module is located in the enclosure on the right side beneath the PS-5N7. For more details, refer to the *PS-5N7 Installation Instructions*, P/N 315-092729.

6. Route the cable wires across the hinge to the back of the enclosure. Do not fasten the cable with a cable anchor until all wiring is complete.

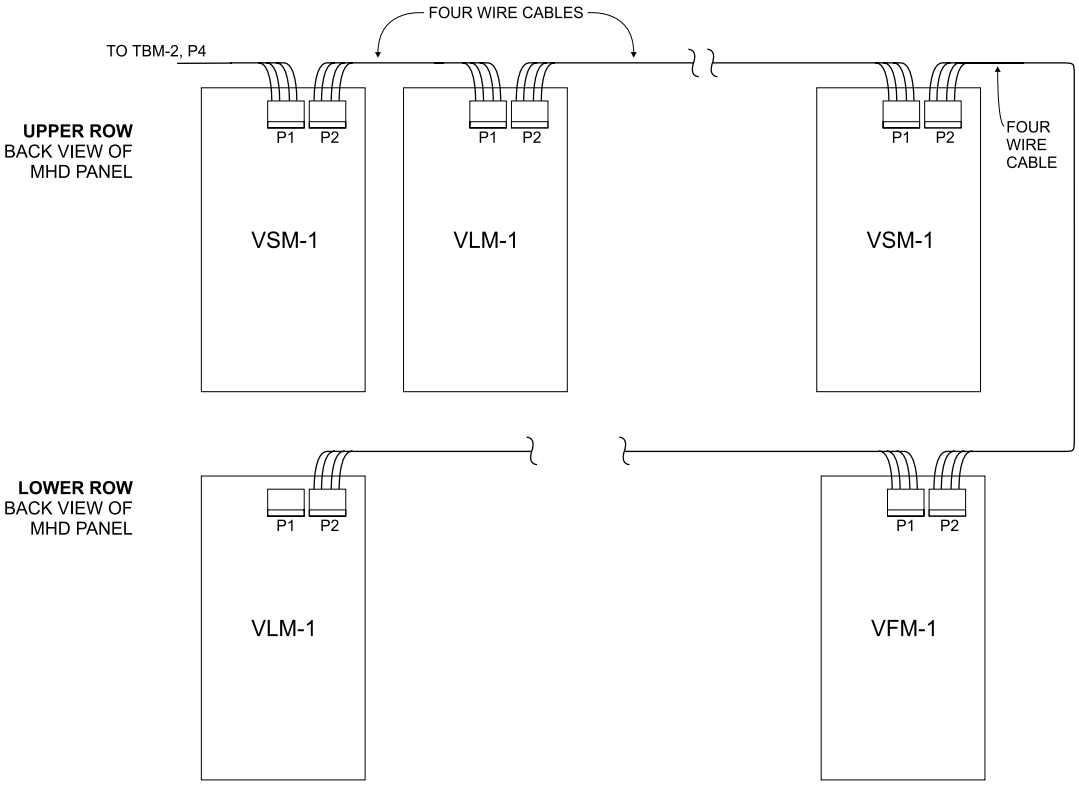


**VSM-1 / VLM-1 / VFM-1 Wiring**


Technical Manuals Online! - http://www.tech-man.com

# XLD-1 Connections and Ratings

**Electrical ratings:**

XLD-1 Input
24V unfiltered,
full wave rectified
(Alarm and Supervisory),
215mA at 24 VDC (no devices)
1.1mA at 24 VDC (per device)

Initiating Circuits
28 VDC peak
(Alarm and Supervisory),
40mA max per circuit
(0-30 devices in alarm)

Battery Calculations
XLD-1 Module Current: 215mA
Device Current: 1.1mA per device

All wiring must be in accordance with Article 760 of NEC and the local building codes.

NOTES

1. Power limited to NFPA 70 per NEC 760.
2. Minimum wire size: 18 AWG.
3. Maximum resistance: 100 ohms total.
4. Maximum capacitance: 0.4µF between + loop and – loop. 0.8µF between + loop and chassis. 0.8µF between – loop and chassis.
5. Each detector or group of detectors, requires a two-wire circuit of thermo-plastic fixture wire enclosed in conduit or limited energy shielded cable without conduit, if permitted by local building codes.
6. No end of line device required.
7. Operates in full conformance with Style 6.
8. Operates in full conformance with Style 4.
9. Any loop may be wired Class A or B.
10. 30 devices maximum per loop.
11. T-tapping is NOT allowed on Class A loops.
12. All circuits are supervised.

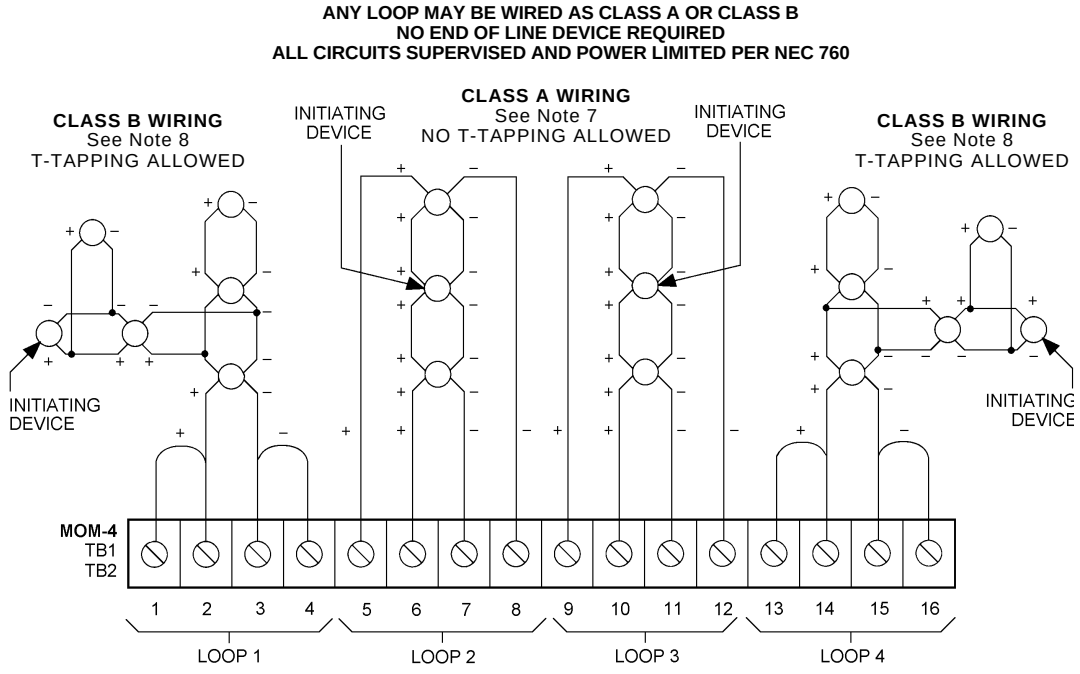


**XLD-1 Wiring**



Technical Manuals Online! - http://www.tech-man.com

Technical Manuals Online! - http://www.tech-man.com

# ZAC-30 Connections and Ratings

**Electrical ratings:**

Power requirement:

24 VDC, 3A at 30W
2A at 20W
1A at 10W

Battery drain:

160mA at supervision
3A max at 30W load
2A max at 20W load
1A max at 10W load

High Level Outputs:

25.2V RMS, 1.2A, 30W max
70.7V RMS, 0.42A, 30W max

Backup amplifier input:

1V RMS max

Frequency response:

300Hz—5KHz ± 1dB

Fuse requirements:

0.8A, P/N 105-292965, for output voltage 70.7V RMS
2.5A, P/N 105-291203, for output voltage 25.2V RMS

Compatible Notification Appliances: Refer to **Compatible Notification Appliances**, P/N 315-096363.

Speaker/strobe appliances are compatible for the speaker element only. For the strobe element to work, the appliance must also be wired to a ZC series card, a CSM-4, or an ICP-B6.

**Electrical connections:**

All wiring must be in accordance with Article 760 of NEC or the local building codes.

Use unshielded twisted pair for high level amplifier connections. Use shielded twisted pair for terminals 1 and 2 of the backup amplifier. Connect shield to terminal 2. Use single-conductor wire for other connections.



Technical Manuals Online! - http://www.tech-man.com

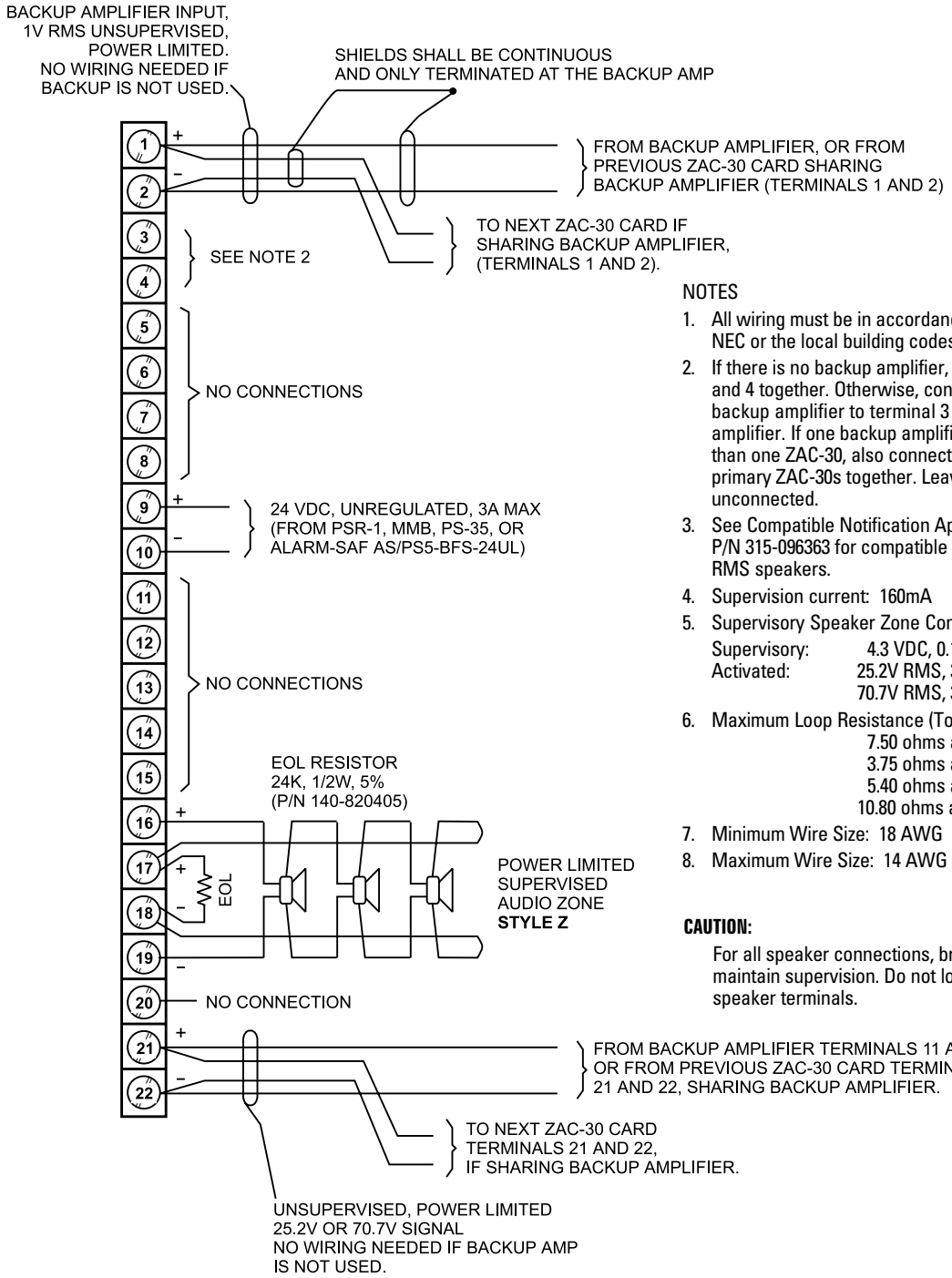


NOTES

1. All wiring must be in accordance with Article 760 of NEC or the local building codes.
2. If there is no backup amplifier, connect terminals 3 and 4 together. Otherwise, connect terminal 3 of the backup amplifier to terminal 3 of the primary amplifier. If one backup amplifier is shared by more than one ZAC-30, also connect all terminal 3s of primary ZAC-30s together. Leave the terminal 4s unconnected.
3. See Compatible Notification Appliances, P/N 315-096363 for compatible UL listed 25.2/70.7V RMS speakers.
4. Supervision current: 160mA
5. Supervisory Speaker Zone Connections
   Supervisory: 4.3 VDC, 0.18mA
   Activated: 25.2V RMS, 30 watts max (1.2A)
   70.7V RMS, 30 watts max (0.42A)
6. Maximum Loop Resistance (Total):
   7.50 ohms at 25.2V PMS, 15W
   3.75 ohms at 25.2V RMS, 30W
   5.40 ohms at 70.7V RMS, 30W
   10.80 ohms at 70.7V RMS, 15W
7. Minimum Wire Size: 18 AWG
8. Maximum Wire Size: 14 AWG

**CAUTION:**

For all speaker connections, break the wire run to maintain supervision. Do not loop the wire around speaker terminals.

**ZAC-30 Style Z (Class A) Wiring**
**(When a ZAC-30 is used as amplifier and audio zone card)**



Technical Manuals Online! - http://www.tech-man.com

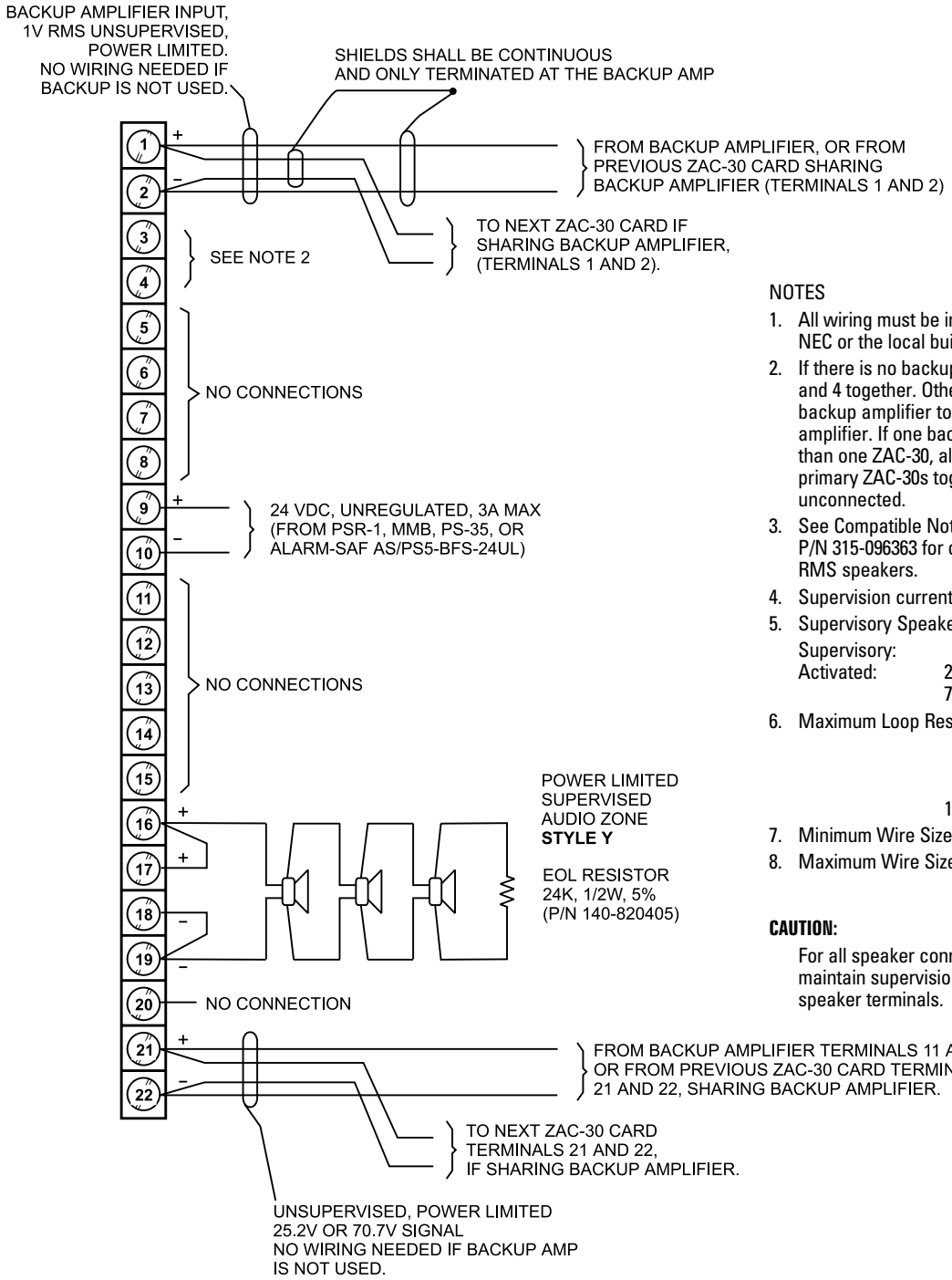


NOTES

1. All wiring must be in accordance with Article 760 of NEC or the local building codes.
2. If there is no backup amplifier, connect terminals 3 and 4 together. Otherwise, connect terminal 3 of the backup amplifier to terminal 3 of the primary amplifier. If one backup amplifier is shared by more than one ZAC-30, also connect all terminal 3s of primary ZAC-30s together. Leave the terminal 4s unconnected.
3. See Compatible Notification Appliances, P/N 315-096363 for compatible UL listed 25.2/70.7V RMS speakers.
4. Supervision current: 160mA
5. Supervisory Speaker Zone Connections
   Supervisory: 4.3 VDC, 0.18mA
   Activated: 25.2V RMS, 30 watts max (1.2A)
   70.7V RMS, 30 watts max (0.42A)
6. Maximum Loop Resistance (Total):
   7.50 ohms at 25.2V PMS, 15W
   3.75 ohms at 25.2V RMS, 30W
   5.40 ohms at 70.7V RMS, 30W
   10.80 ohms at 70.7V RMS, 15W
7. Minimum Wire Size: 18 AWG
8. Maximum Wire Size: 14 AWG

**CAUTION:**

For all speaker connections, break the wire run to maintain supervision. Do not loop the wire around speaker terminals.

**ZAC-30 Style Y (Class B) Wiring**
**(When a ZAC-30 is used as amplifier and audio zone card)**



Technical Manuals Online! - http://www.tech-man.com

NOTES

1. All wiring must be in accordance with Article 760 of NEC or the local building codes.
2. If there is no backup amplifier, connect terminals 3 and 4 together. Otherwise, connect terminal 3 of the backup amplifier to terminal 3 of the primary amplifier. If one backup amplifier is shared by more than one ZAC-30, also connect all terminal 3s of primary ZAC-30s together. Leave the terminal 4s unconnected.
3. See Compatible Notification Appliances, P/N 315-096363 for compatible UL listed 25.2/ 70.7V RMS speakers.
4. Supervision current: 160mA
5. Supervisory Speaker Zone Connections
   Supervisory:
   4.3 VDC, 0.18mA
   Activated:
   25.2V RMS, 15 watts max per split zone (0.6A)
   70.7V RMS, 15 watts max per split zone (0.21A)
6. Maximum Loop Resistance (Total):
   7.50 ohms at 25.2V RMS, 15W
   10.80 ohms at 70.7V RMS, 15W
7. Minimum Wire Size: 18 AWG
8. Maximum Wire Size: 14 AWG

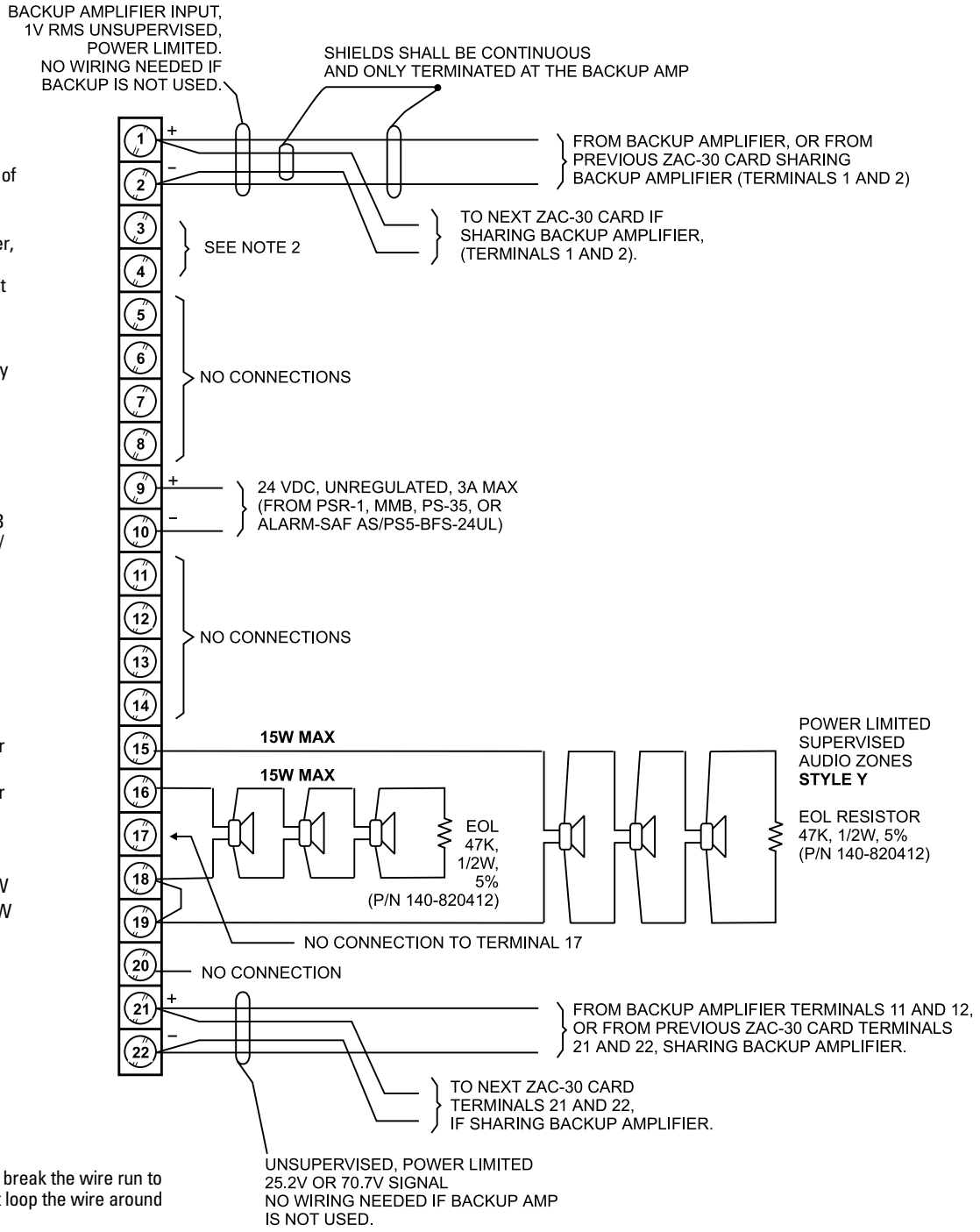


**CAUTION:**

For all speaker connections, break the wire run to maintain supervision. Do not loop the wire around speaker terminals.

**ZAC-30 Split Speaker Zone Style Y (Class B) Wiring**
**(When a ZAC-30 is used as amplifier and audio zone card)**



Technical Manuals Online! - http://www.tech-man.com

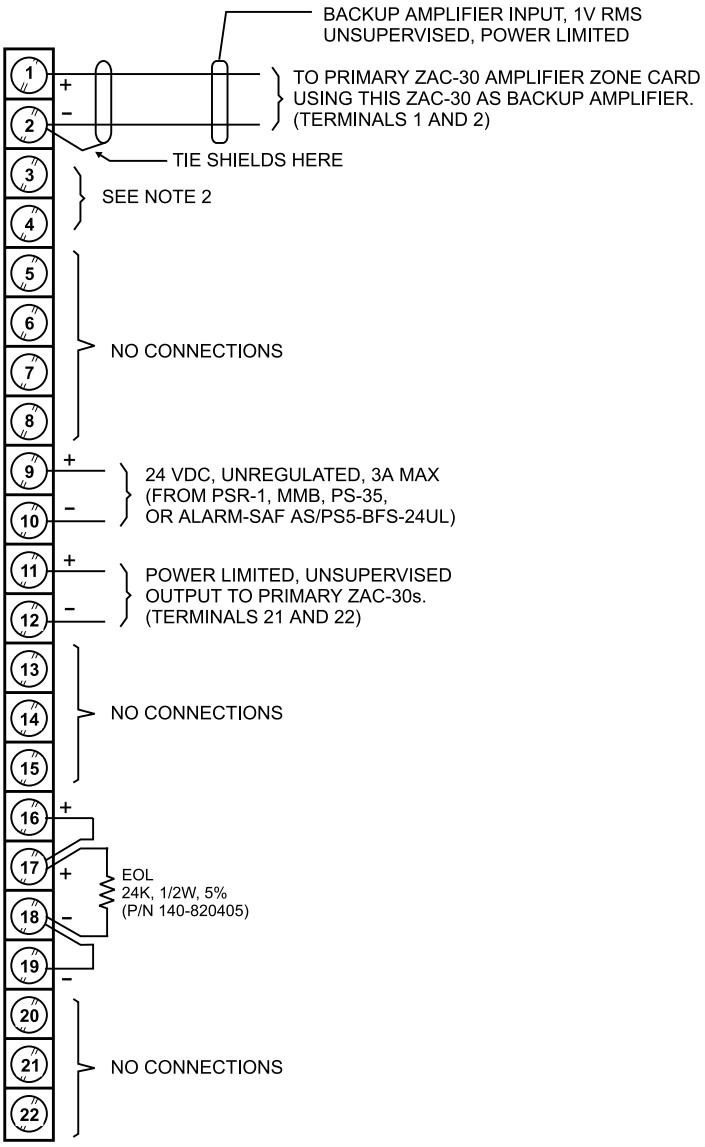


NOTES

1. All wiring must be in accordance with Article 760 of NEC or the local building codes.
2. If there is no backup amplifier, connect terminals 3 and 4 together. Otherwise, connect terminal 3 of the backup amplifier to terminal 3 of the primary amplifier. If one backup amplifier is shared by more than one ZAC-30, also connect all terminal 3s of primary ZAC-30s together. Leave the terminal 4s unconnected.
3. See Compatible Notification Appliances, P/N 315-096363 for compatible UL listed 25.2/70.7V RMS speakers.
4. Supervision current: 160mA
5. Supervisory Speaker Zone Connections

   Supervisory: 4.3 VDC, 0.18mA
   Activated: 25.2V RMS, 30 watts max (1.2A)
   70.7V RMS, 30 watts max (0.42A)
6. Minimum Wire Size: 18 AWG
7. Maximum Wire Size: 14 AWG

**CAUTION:**

For all speaker connections, break the wire run to maintain supervision. Do not loop the wire around speaker terminals.

**ZAC-30 Wiring**
**(When ZAC-30 is used as backup for other ZAC-30 cards used as amplifier and audio zone)**



Technical Manuals Online! - http://www.tech-man.com

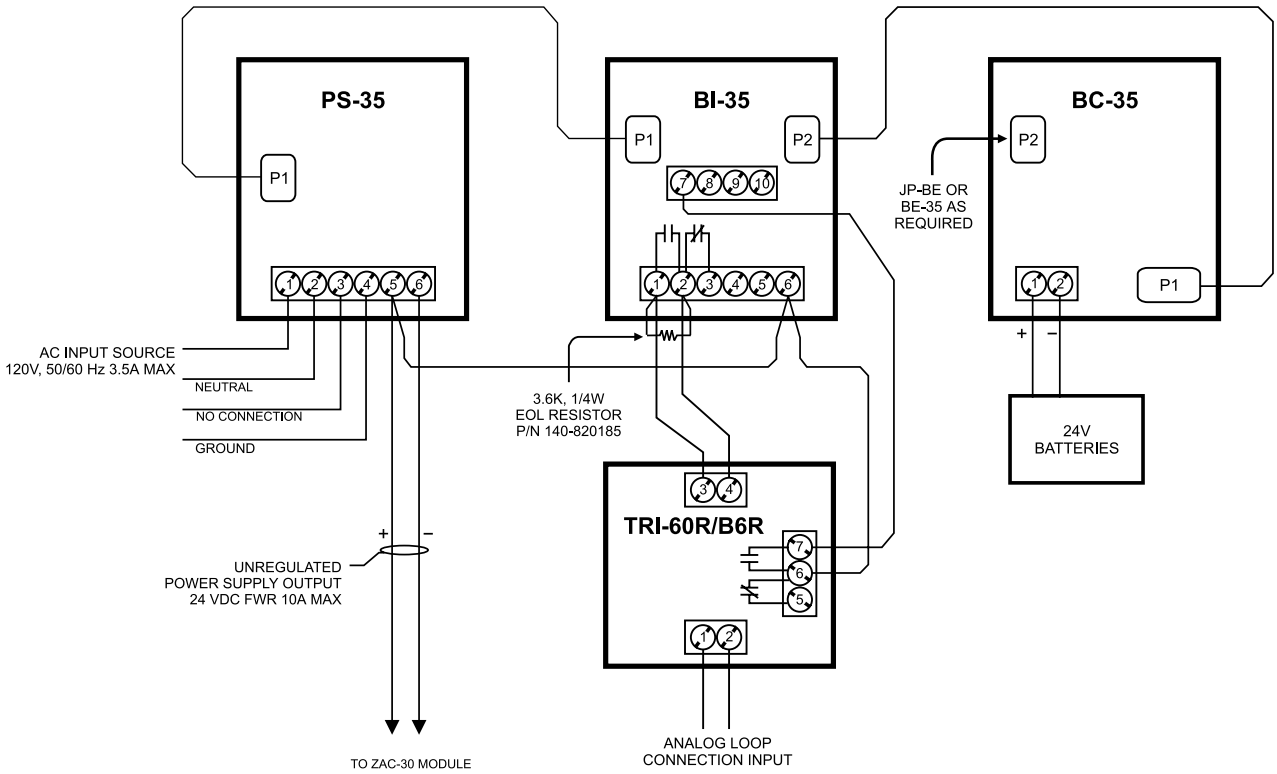


**ZAC-30 Power Connections When Using the PS-35**



Technical Manuals Online! - http://www.tech-man.com

# ZC1-8B Connections and Ratings

**Electrical ratings:**
24 VDC, 170 mA max
5 VDC, 31mA max

**NOTE:** Use shielded wiring on strobe circuits when they are in the same raceway as audio wiring.

**Inputs**
Speaker: 25.2 or 70.7V RMS
Strobe: 24V unfiltered,full wave rectified

**Outputs**
Max. loop resistance:
70.7V RMS
6.50 ohms max, 25W (0.35A)
3.25 ohms max, 50W (0.71A)
2.28 ohms max, 70W (1.0A)
1.63 ohms max, 100W (1.4A)

25.2V RMS:
3.0 ohms max, 37.5W (1.5A)
2.5 ohms max, 45W (1.8A)

Strobe (24 VDC)
3.0 ohms max, 24 VDC (1.5A)
2.5 ohms max, 24 VDC (1.8A)

Max. activated outputs:
70.7V RMS
100W max, 1.4A max

25.2V RMS:
45W max, 1.8A max

Strobe (24 VDC)
24 VDC max, 1.8A max

Supervisory outputs:
70.7V RMS, 25.2V RMS, 24 VDC:
1.5 VDC, .06mA

Max. card output:
(Single source for all three inputs)
25.2V RMS, 3.9A, 100W
70.7V RMS, 1.4A, 100W
24 VDC, 14.4A Non-power limited
24 VDC, 11.6A Power limited

Max. card output:
(Three separate sources of power)
70.7V RMS, 300W
25.2V RMS, 300W
24 VDC, 14.4A Non-power limited
24 VDC, 11.6A Power limited

**Fuses**
25.2V/24 VDC, 3.15A, 250V
(P/N 105-291200) Qty = 8

70.7V RMS, 1.6A, 250V
(P/N 105-291202) Qty = 8

70.7V RMS, 2.0A, 250V
(P/N 105-292199) Qty = 3

End of line resistor:
24K, ½W, ±5% (P/N 140-820405)

Compatible Notification Appliances:
Refer to **Compatible Notification Appliances**, P/N 315-096363.



Technical Manuals Online! - http://www.tech-man.com

## Electrical connections:

All wiring must be in accordance with Article 760 of NEC or the local building codes.

Some signal is lost in the zone wires due to line resistance. Refer to the tables below to determine the decibel loss for various wire gauges and lengths. A reduction in load reduces the loss. Use the largest wire size possible for the smallest loss.

**SPEAKER ZONE DECIBEL LOSS for 25.2V RMS, 35W load**

| Length | Gauge | | |
|---|---|---|---|
| | 14 AWG | 16 AWG | 18 AWG |
| (feet) | (loss in decibels) | | |
| 200 | 0.2 | 0.3 | 0.6 |
| 400 | 0.5 | 0.7 | 1.1 |
| 600 | 0.7 | 1.1 | 1.6 |
| 800 | 0.9 | 1.5 | 2.2 |
| 1000 | 1.2 | 1.8 | 2.7 |

**SPEAKER ZONE DECIBEL LOSS for 70.7V RMS, 25W load**

| Length | Gauge | |
|---|---|---|
| | 16 AWG | 18 AWG |
| (feet) | (loss in decibels) | |
| 200 | 0.04 | 0.06 |
| 400 | 0.07 | 0.11 |
| 600 | 0.11 | 0.17 |
| 800 | 0.14 | 0.22 |
| 1000 | 0.18 | 0.27 |



Technical Manuals Online! - http://www.tech-man.com

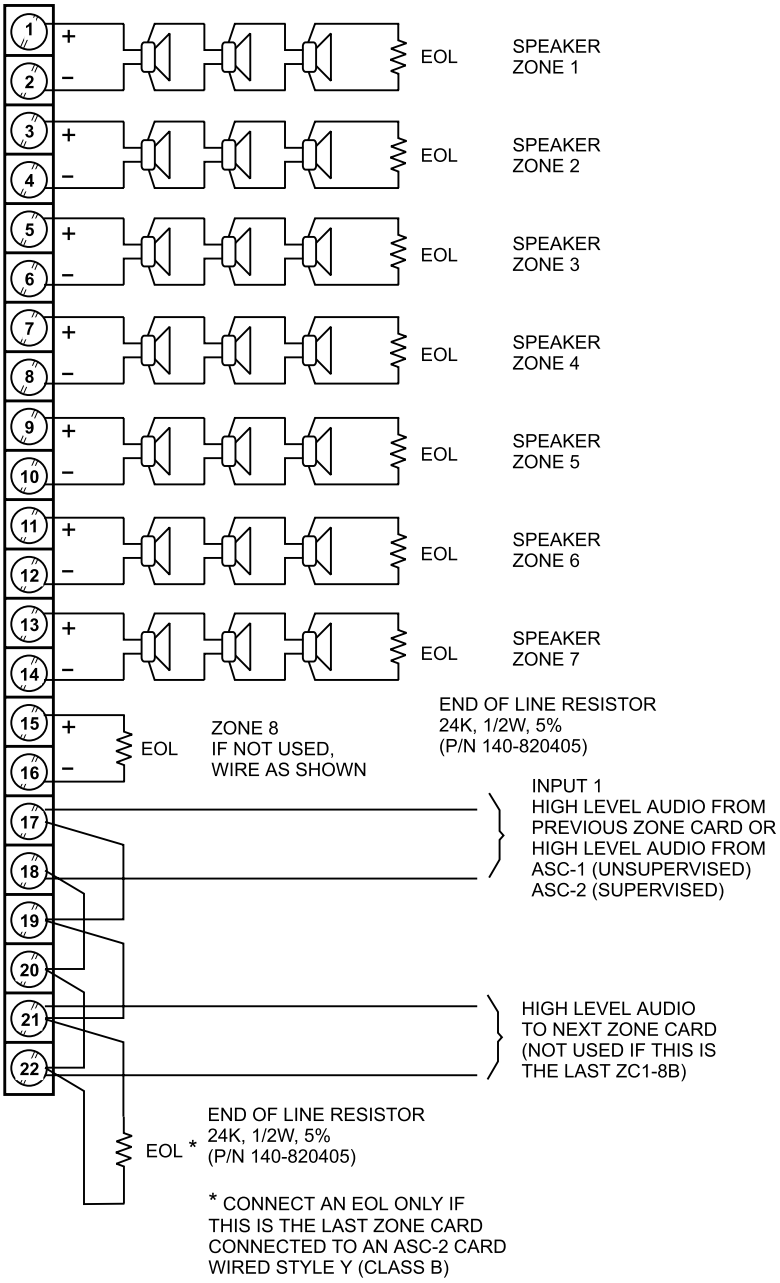


25/70.7V RMS SPEAKER UNITS:

Any UL listed Fire Protective Signaling Speaker rated 25/70.7V RMS may be connected to this circuit. See Compatible Notification Appliances, P/N 315-096363 for compatible speaker models.

ALL ZONES SUPERVISED, POWER LIMITED

Power Limiting is accomplished using the PLC-4 and PL864-25A, -70A, or -25S as required

All wiring must be in accordance with Article 760 of NEC or the local building codes.

Maximum Loop Resistance:
70.7V RMS, 6.5 ohms max, 25 watts
25.2V RMS, 3 ohms max, 37.5 watts
25.2V RMS, 2.5 ohms max, 45 watts

Minimum Wire Size: 18 AWG

Maximum Wire Size: 14 AWG

Supervisory Speaker Zone Connections

Supervisory: 1.5 VDC, 0.06mA
Activated: 25.2V RMS, 45 watts max (1.8A)
70.7V RMS, 70 watts max (1.0A)

Maximum Total Load: 25.2V, 3.9A, 100 watts
70.7V, 1.4A, 100 watts

**ZC1-8B Speaker Zone Wiring Diagram with One Amplifier as Power Source**



Technical Manuals Online! - http://www.tech-man.com

24 VDC STROBE UNITS:
See Compatible Notification Appliances, P/N 315-096363.

ALL ZONES SUPERVISED, POWER LIMITED
Power Limiting is accomplished using the PLC-4 and PL864-25A, -70A, or -25S as required

All wiring must be in accordance with Article 760 of NEC or the local building codes.

Maximum Loop Resistance:
Audio: 3 ohms max, 1.5A
2.5 ohms max, 1.8A

Minimum Wire Size: 14 AWG

Supervisory Strobe Zone Connections
Supervisory: 1.5 VDC, 0.06mA
Activated: 24 VDC, 45 watts max (1.8A)

Maximum Total Load: 24 VDC,
4.0A power limited
14.4A non-power limited

NOTE:
ALL STROBE ZONE POLARITIES ARE SHOWN IN SUPERVISORY CONDITION.
Strobe devices are not polarity supervised and should be tested in compliance with NFPA Standards.

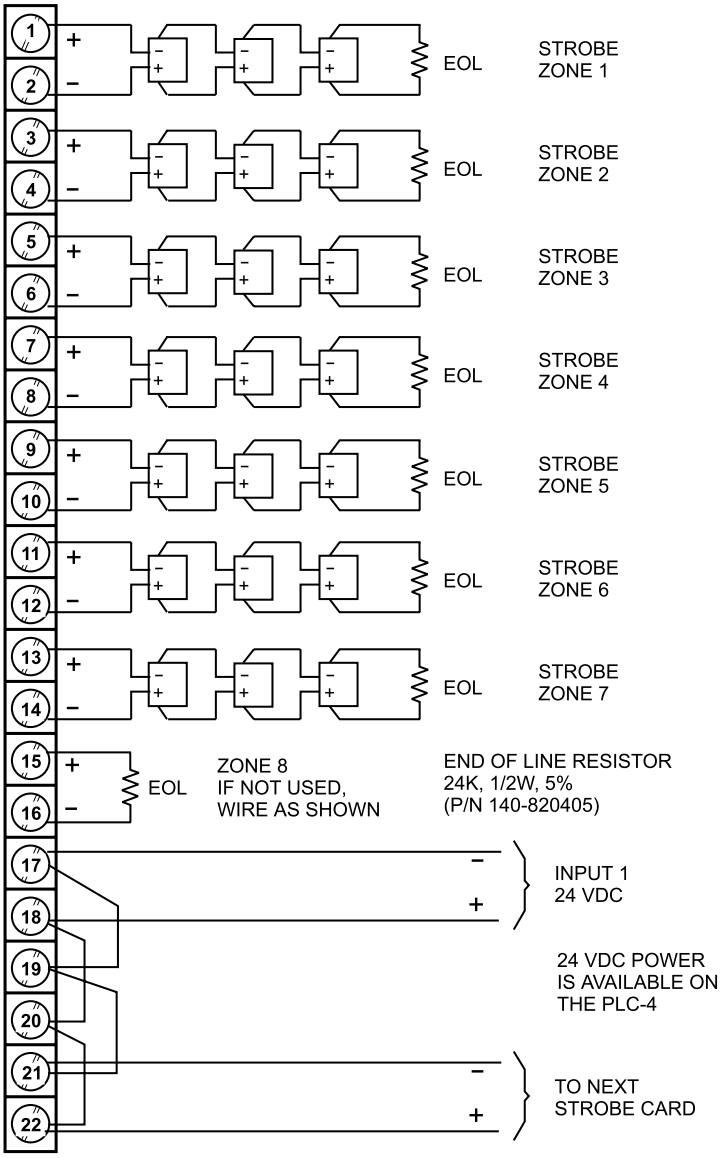


**ZC1-8B Strobe Zone Wiring Diagram (25V Only) with a Single DC Power Source**



Technical Manuals Online! - http://www.tech-man.com

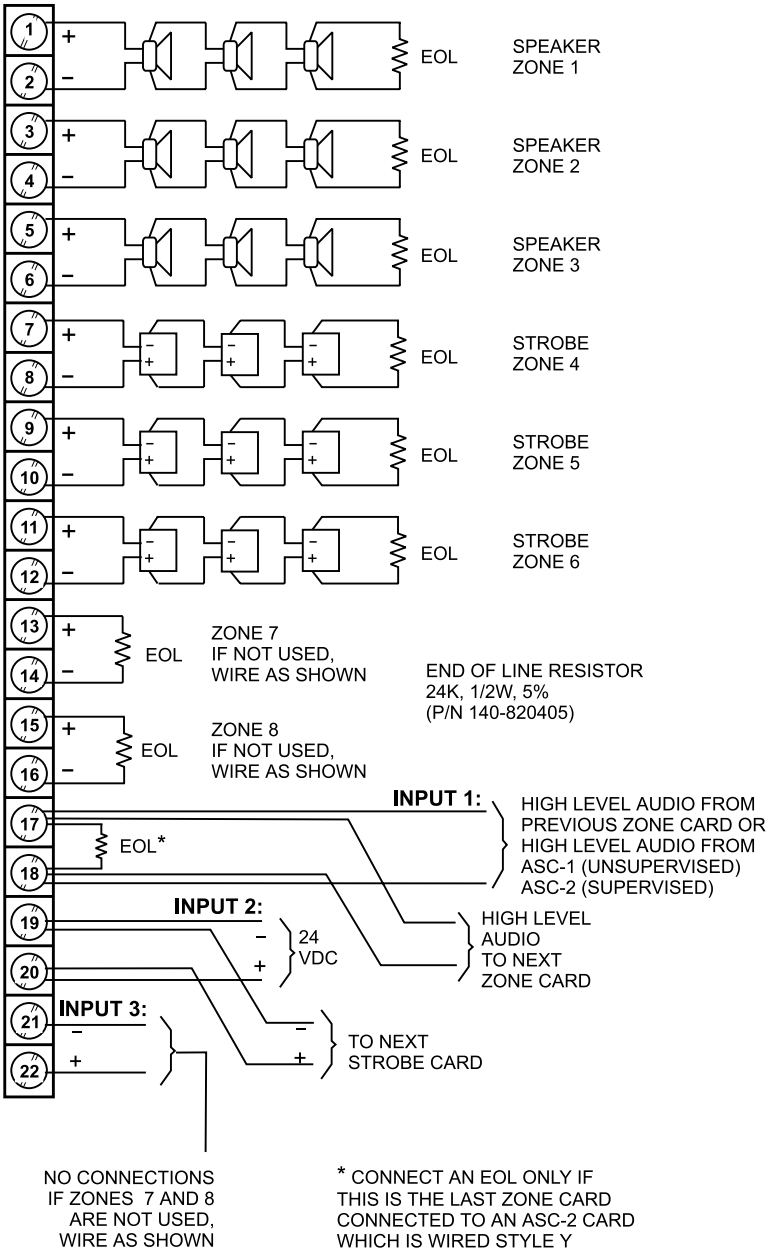


**ZC1-8B Combined Speaker Zone and Strobe Wiring Diagram with a Separate Power Source for Each Input (1, 2, and 3)**

25/70.7V RMS SPEAKER UNITS and 24 VDC STROBE UNITS:

Any UL listed Fire Protective Signaling Speaker rated 25/70.7V RMS may be connected to this circuit. See Compatible Notification Appliances, P/N 315-096363 for compatible combination speaker strobe models.

NOTE:

In combination models, the speakers must be connected to separate circuits from the strobes.

ALL ZONES SUPERVISED, POWER LIMITED

Power Limiting is accomplished using the PLC-4 and PL864-25A, -70A, or -25S as required

All wiring must be in accordance with Article 760 of NEC or the local building codes.

Maximum Loop Resistance:

Audio: 25.2V RMS and 24 VDC
3 ohms max, 37.5 watts (1.5A)
2.5 ohms max, 45 watts (1.8A)

Minimum Wire Size: 14 AWG

Supervisory Speaker Zone Connections

| | |
|---|---|
| Supervisory: | 1.5 VDC, 0.06mA |
| Activated: | 25.2V RMS, 45 watts max (1.8A) |
| | 70.7V RMS, 70 watts max (1.0A) |
| | 24 VDC, 45 watts max (1.8A) |

Maximum Total Load:

| | |
|---|---|
| For Input 1 (Outputs 1, 2, 3) and Input 2 (Outputs 4, 5, 6) | 25.2V, 3.9A, 100 watts |
| | 70.7V, 1.4A, 100 watts |
| | 24 VDC, 5.4A, 135 watts |
| For Input 3 (Outputs 7, 8) | 25.2V, 3.6A, 90 watts |
| | 70.7V, 1.4A, 100 watts |
| | 24 VDC, 3.6A, 90 watts |

NOTE:
ALL STROBE ZONE POLARITIES ARE SHOWN IN SUPERVISORY CONDITION.

Strobe devices are not polarity supervised and should be tested in compliance with NFPA Standards.



Technical Manuals Online! - http://www.tech-man.com

70.7V RMS SPEAKER UNITS:

Any UL listed Fire Protective Signaling Speaker rated 70.7V RMS may be connected to this circuit. See Compatible Notification Appliances, P/N 315-096363 for compatible speaker models.

NOTE:

In combination models, the speakers must be connected to separate circuits from the strobes.

ALL ZONES SUPERVISED, POWER LIMITED

Power Limiting is accomplished using the PLC-4 and PL864-25A, -70A, or -25S as required

All wiring must be in accordance with Article 760 of NEC or the local building codes.

Maximum Loop Resistance:

Audio: 25.2V RMS and 24 VDC
3 ohms max, 37.5 watts (1.5A)
2.5 ohms max, 45 watts (1.8A)

Minimum Wire Size: 14 AWG

Supervisory Speaker Zone Connections

Supervisory: 1.5 VDC, 0.06mA
Activated: 25.2V RMS, 45 watts max (1.8A)
70.7V RMS, 70 watts max (1.0A)
24 VDC, 45 watts max (1.8A)

Maximum Total Load:

For Input 1 (Outputs 1 , 2, 3) and Input 2 (Outputs 4, 5, 6): 25.2V, 3.9A, 100 watts; 70.7V, 1.4A, 100 watts; 24 VDC, 5.4A, 135 watts

For Input 3 (Outputs 7, 8): 25.2V, 3.6A, 90 watts; 70.7V, 1.4A, 100 watts; 24 VDC, 3.6A, 90 watts

NOTE:

Three 2A, 250V fuses (P/N 105-292199) are included in the fuse kit for applications where zones of up to 100W at 70.7V are required. With separate amplifiers for each input, one zone per input can be used for this purpose. Place fuses in the clips for the desired zone and connect the zone wires to the appropriate terminals. When these fuses are installed, the EL-410C/D amplifiers that connect to these zones cannot be used for any other zones.

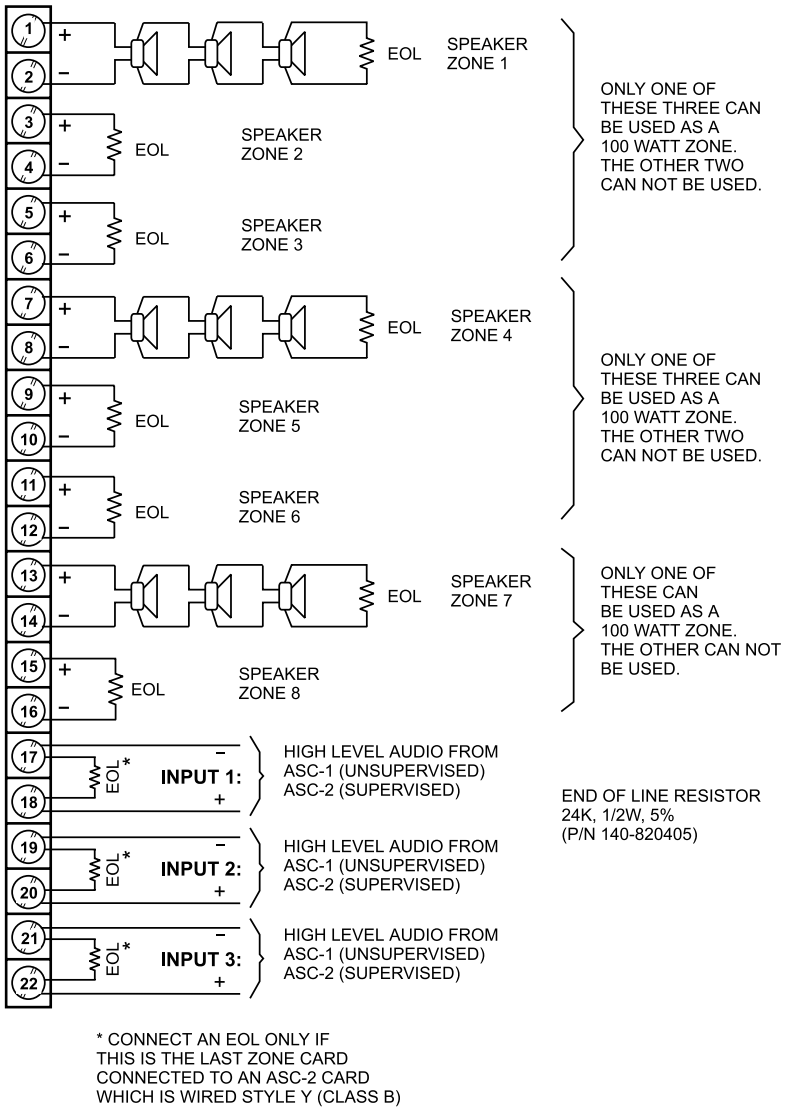


**ZC1-8B Speaker Zone Diagram with a Separate 70.7V RMS Power Source for Each Input (1, 2, and 3)**



Technical Manuals Online! - http://www.tech-man.com

# ZC2-4AB Connections and Ratings

**Electrical ratings:**

24 VDC, 167mA
5 VDC, 30mA

**NOTE:** Use shielded wiring on strobe circuits when they are in the same raceway as audio wiring.

Maximum loop resistance:
Total Resistance for Each Zone
70.7V RMS:
6.5 ohms max, 25W (0.35A)
3.25 ohms max, 50W (0.71A)
2.28 ohms max, 70W (1.0A)
1.63 ohms max, 100W (1.4A)

25.2V RMS:
3 ohms max, 37.5W (1.5A)
2.5 ohms max, 45W (1.8A)

**Inputs**

| | |
|---|---|
| Speaker: | 25.2 or 70.7V RMS |
| Strobe: | 24V unfiltered, full wave rectified |

**Outputs**

| | |
|---|---|
| Supervisory: | 1.5 VDC, 0.06mA |
| Activated: | 25.2V RMS/24 VDC, 45W max, 1.8A max |
| | 70.7V RMS, 70W max, 1.0A max |

**Fuses**

25V 3.15A, 250V (P/N 105-291200)
70V 1.6A, 250V (P/N 105-291202)

End of line resistor:
24K, ½W, ±5% (P/N 140-820405)

Max card output:
25.2V RMS, 3.9A, 100W
70.7V RMS, 1.4A, 100W

Compatible Notification Appliances:

Refer to **Compatible Notification Appliances**, P/N 315-096363.

**Electrical connections:**

All wiring must be in accordance with Article 760 of NEC or the local building codes.

Some signal is lost in the zone wires due to line resistance. Refer to the tables on the next page to determine the decibel loss for various wire gauges and lengths. A reduction in load reduces the loss. Use the largest wire size possible for the smallest loss.



Technical Manuals Online! - http://www.tech-man.com

**SPEAKER ZONE DECIBEL LOSS**
**for 25.2V RMS, 35W load**

| Length | Gauge | | |
|---|---|---|---|
| | 14 AWG | 16 AWG | 18 AWG |
| (feet) | (loss in decibels) | | |
| 200 | 0.2 | 0.3 | 0.6 |
| 400 | 0.5 | 0.7 | 1.1 |
| 600 | 0.7 | 1.1 | 1.6 |
| 800 | 0.9 | 1.5 | 2.2 |
| 1000 | 1.2 | 1.8 | 2.7 |

**SPEAKER ZONE DECIBEL LOSS**
**for 70.7V RMS, 25W load**

| Length | Gauge | |
|---|---|---|
| | 16 AWG | 18 AWG |
| (feet) | (loss in decibels) | |
| 200 | 0.04 | 0.06 |
| 400 | 0.07 | 0.11 |
| 600 | 0.11 | 0.17 |
| 800 | 0.14 | 0.22 |
| 1000 | 0.18 | 0.27 |


Technical Manuals Online! - http://www.tech-man.com

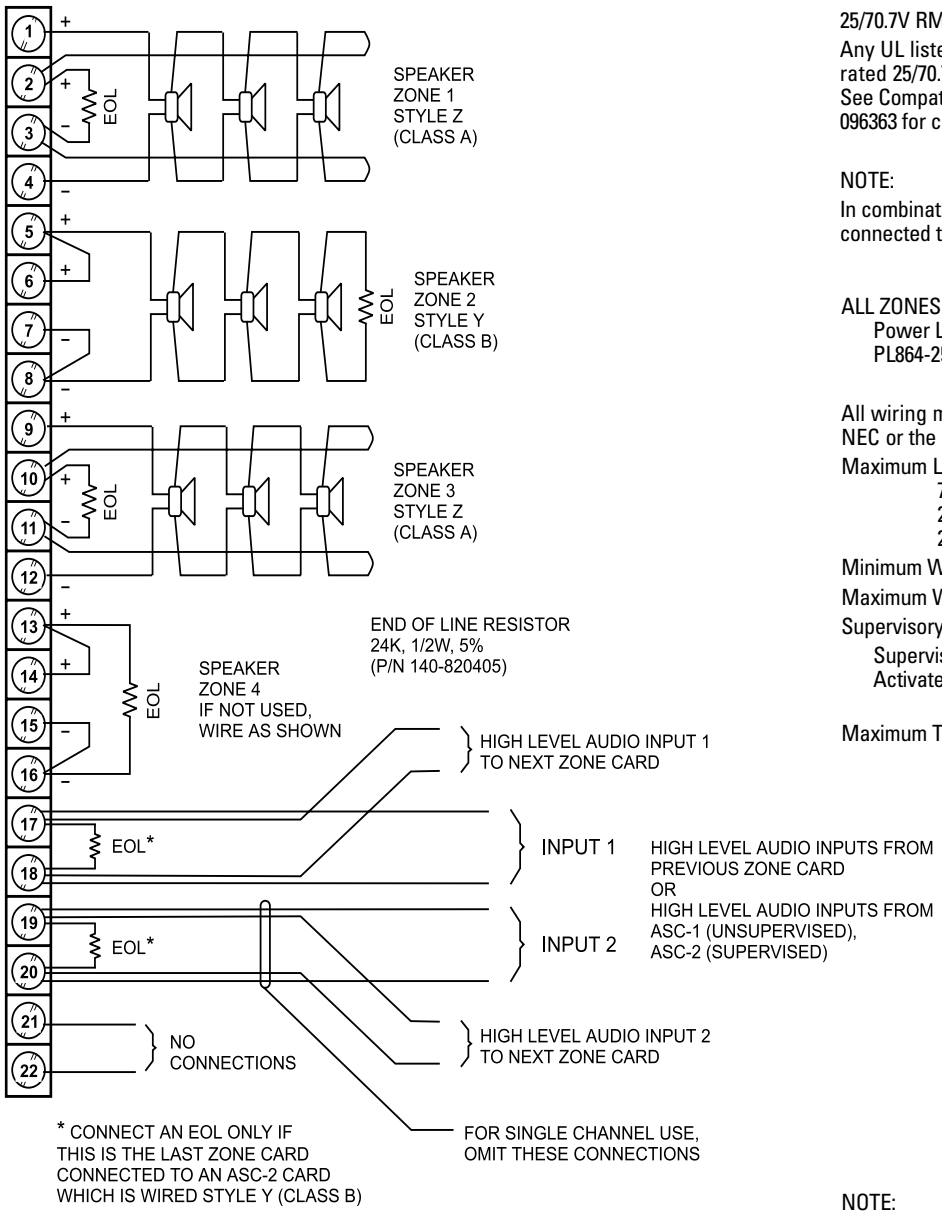


**ZC2-4AB Speaker Zone Wiring Diagram**

25/70.7V RMS SPEAKER UNITS:

Any UL listed Fire Protective Signaling Speaker rated 25/70.7V RMS may be connected to this circuit. See Compatible Notification Appliances, P/N 315-096363 for compatible speaker models.

NOTE:

In combination models, the speakers must be connected to separate circuits from the strobes.

ALL ZONES SUPERVISED, POWER LIMITED

Power Limiting is accomplished using the PLC-4 and PL864-25A, -70A, or -25S as required

All wiring must be in accordance with Article 760 of NEC or the local building codes.

Maximum Loop Resistance:
- 70.7V RMS, 6.5 ohms max, 25 watts (0.35A)
- 25.2V RMS, 3 ohms max, 37.5 watts (1.5A)
- 25.2V RMS, 2.5 ohms max, 45 watts (1.8A)

Minimum Wire Size: 18 AWG

Maximum Wire Size: 14 AWG

Supervisory Speaker Zone Connections

| | |
|---|---|
| Supervisory: | 1.5 VDC, 0.06mA |
| Activated: | 25.2V RMS, 45 watts max (1.8A) |
| | 70.7V RMS, 70 watts max (1.0A) |
| Maximum Total Load: | 25.2V, 3.9A, 100 watts |
| | 70.7V, 1.4A, 100 watts |

NOTE:

A 2A, 250V fuse (P/N 105-292199) is included in the fuse kit for applications where a single zone of up to 100W at 70.7V is required. Place this fuse in the clips for the desired zone and connect the zone wires to the appropriate terminals. When this fuse is installed, the EL-410C/D amplifier that connects to this zone cannot be used for any other zones.



Technical Manuals Online! - http://www.tech-man.com

24 VDC STROBE UNITS:
See Compatible Notification Appliances, P/N 315-096363.

ALL ZONES SUPERVISED, POWER LIMITED
Power Limiting is accomplished using the PLC-4 and PL864-25A, -70A, or -25S as required

All wiring must be in accordance with Article 760 of NEC or the local building codes.

Maximum Loop Resistance:
3.0 ohms max, 1.5A
2.5 ohms max, 1.8A

Maximum Wire Size: 14 AWG

Supervisory Speaker Zone Connections
Supervisory: 1.5 VDC, 0.06mA
Activated: 24 VDC, 45 watts max (1.8A)

Maximum Total Load: 24 VDC, 14.4A non-power limited
4A power limited

End of Line Resistor: 24K, ½W, 5% (P/N 140-820405)

24 VDC power is available on the PLC-4.

NOTE:
ALL STROBE ZONE POLARITIES ARE SHOWN IN SUPERVISORY CONDITION.
Strobe devices are not polarity supervised and should be tested in compliance with NFPA Standards.

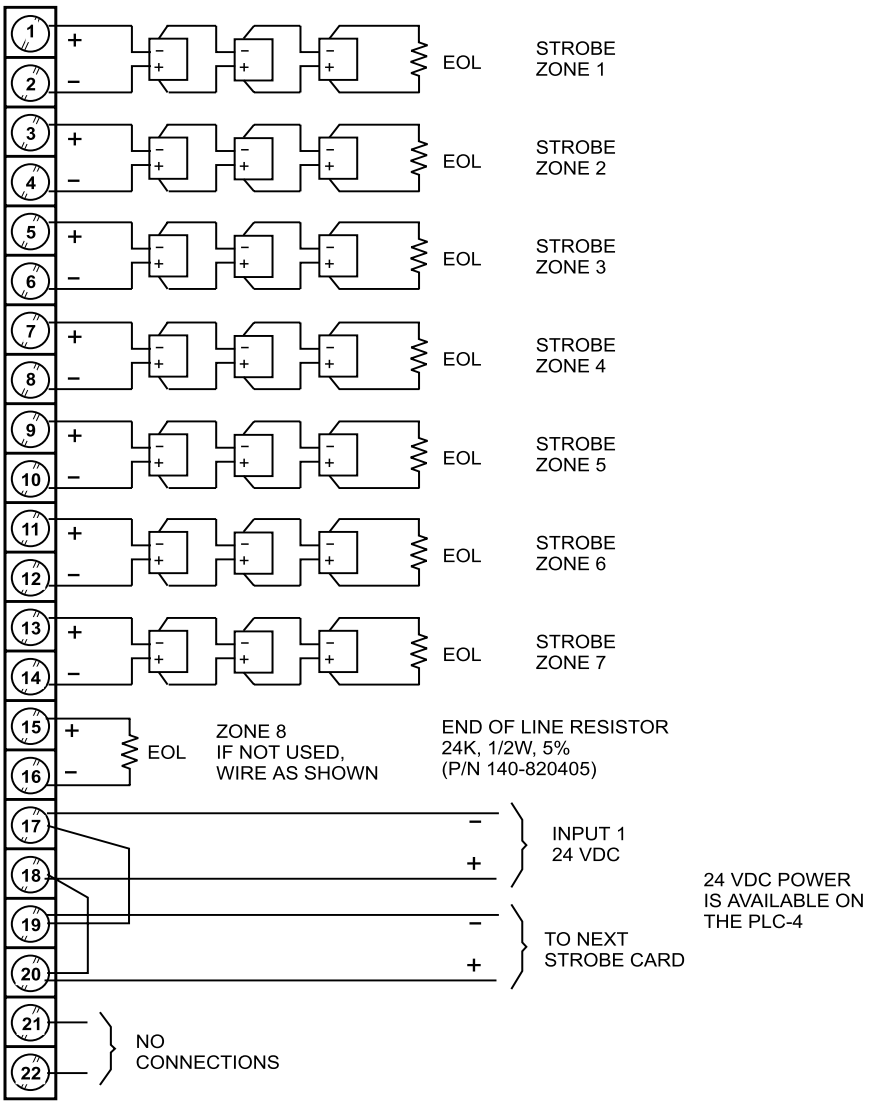


**ZC2-4AB Strobe Zone Wiring Diagram (25V Only)**



Technical Manuals Online! - http://www.tech-man.com

# ZC2-8B Connections and Ratings

**Electrical ratings:**

24 VDC, 342mA max
5 VDC, 31mA max

**NOTE:** Use shielded wiring on strobe circuits when they are in the same raceway as audio wiring.

Maximum loop resistance:
Total Resistance for Each Zone
70.7V RMS:
6.5 ohms max, 25W (0.35A)
3.25 ohms max, 50W (0.71A)
2.28 ohms max, 70W (1.0A)
1.63 ohms max, 100W (1.4A)

25.2V RMS:
3 ohms max, 37.5W (1.5A)
2.5 ohms max, 45W (1.8A)

**Inputs**

Speaker: 25.2 or 70.7V RMS
Strobe: 24V unfiltered, full wave rectified

**Outputs**

Supervisory: 1.5 VDC, 0.06mA

Activated: 25.2V RMS/24 VDC, 45W max, 1.8A max

70.7V RMS, 70W max, 1.0A max

**Fuses**

25V 3.15A, 250V (P/N 105-291200)

70V 1.6A, 250V (P/N 105-291202)

End of line resistor:
24K, ½W, ±5% (P/N 140-820405)

Max card output:
25.2V RMS, 3.9A, 100W
70.7V RMS, 1.4A, 100W

Compatible Notification Appliances:
Refer to **Compatible Notification Appliances**, P/N 315-096363.

**Electrical connections:**

All wiring must be in accordance with Article 760 of NEC or the local building codes.

Some signal is lost in the zone wires due to line resistance. Refer to the tables on the next page to determine the decibel loss for various wire gauges and lengths. A reduction in load reduces the loss. Use the largest wire size possible for the smallest loss.



Technical Manuals Online! - http://www.tech-man.com

**SPEAKER ZONE DECIBEL LOSS**
**for 25.2V RMS, 35W load**

| Length | Gauge | | |
|---|---|---|---|
| | 14 AWG | 16 AWG | 18 AWG |
| (feet) | (loss in decibels) | | |
| 200 | 0.2 | 0.3 | 0.6 |
| 400 | 0.5 | 0.7 | 1.1 |
| 600 | 0.7 | 1.1 | 1.6 |
| 800 | 0.9 | 1.5 | 2.2 |
| 1000 | 1.2 | 1.8 | 2.7 |

**SPEAKER ZONE DECIBEL LOSS**
**for 70.7V RMS, 25W load**

| Length | Gauge | |
|---|---|---|
| | 16 AWG | 18 AWG |
| (feet) | (loss in decibels) | |
| 200 | 0.04 | 0.06 |
| 400 | 0.07 | 0.11 |
| 600 | 0.11 | 0.17 |
| 800 | 0.14 | 0.22 |
| 1000 | 0.18 | 0.27 |


Technical Manuals Online! - http://www.tech-man.com

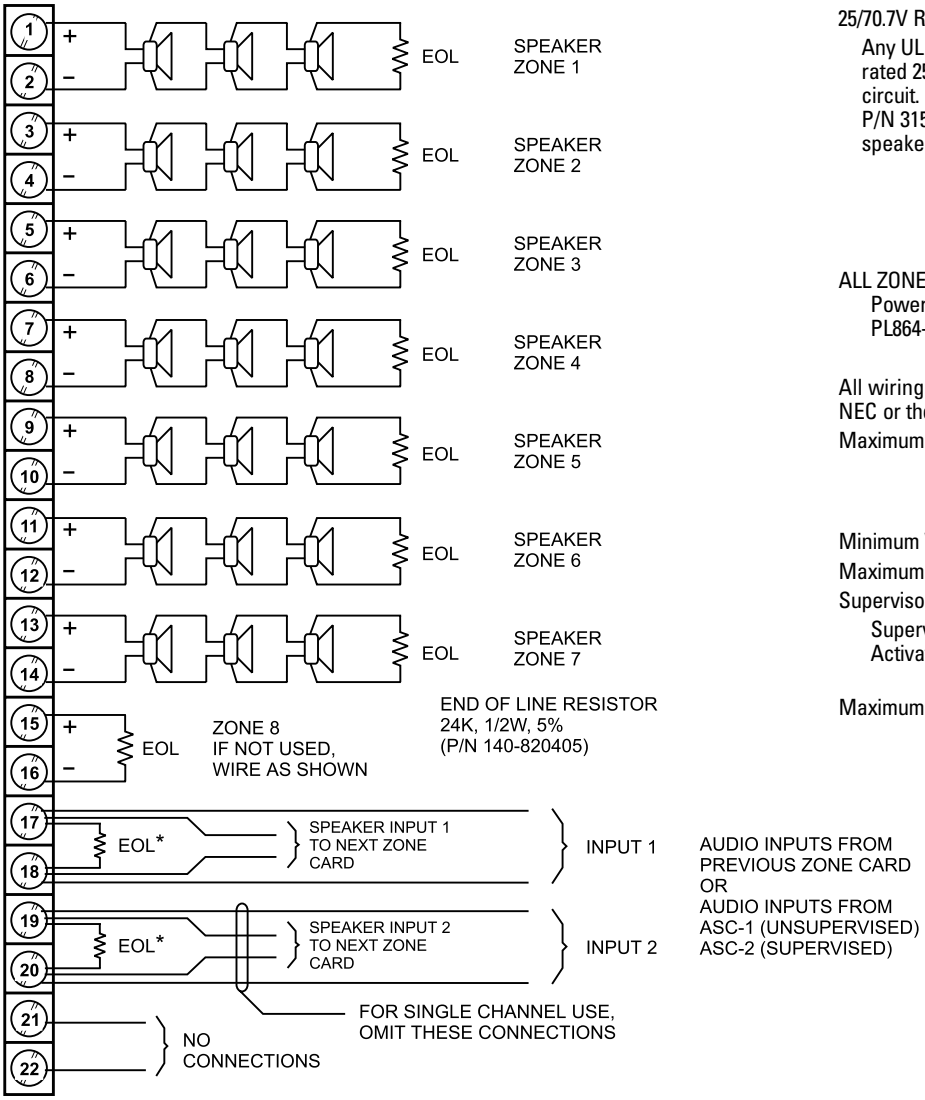


* CONNECT AN EOL (P/N 140-820405) ONLY IF THIS IS THE LAST ZONE CARD CONNECTED TO AN ASC-2 CARD WHICH IS WIRED STYLE Y (CLASS B)

25/70.7V RMS SPEAKER UNITS:

Any UL listed Fire Protective Signaling Speaker rated 25/70.7V RMS may be connected to this circuit. See Compatible Notification Appliances, P/N 315-096363 for compatible combination speaker strobe models.

ALL ZONES SUPERVISED, POWER LIMITED

Power Limiting is accomplished using the PLC-4 and PL864-25A, -70A, or -25S as required

All wiring must be in accordance with Article 760 of NEC or the local building codes.

Maximum Loop Resistance:
70.7V RMS, 6.5 ohms max, 25 watts (0.35A)
25.2V RMS, 3 ohms max, 37.5 watts (1.5A)
25.2V RMS, 2.5 ohms max, 45 watts (1.8A)

Minimum Wire Size: 18 AWG

Maximum Wire Size: 14 AWG

Supervisory Speaker Zone Connections

Supervisory: 1.5 VDC, 0.06mA
Activated: 25.2V RMS, 45 watts max (1.8A)
70.7V RMS, 70 watts max (1.0A)

Maximum Total Load: 25.2V, 3.9A, 100 watts
70.7V, 1.4A, 100 watts

NOTE:

A 2A, 250V fuse (P/N 105-292199) is included in the fuse kit for applications where a single zone of up to 100W at 70.7V is required. Place this fuse in the clips for the desired zone and connect the zone wires to the appropriate terminals. When this fuse is installed, the EL-410C/D amplifier that connects to this zone cannot be used for any other zones.

**ZC2-8B Speaker Zone Wiring Diagram**



Technical Manuals Online! - http://www.tech-man.com

Technical Manuals Online! - http://www.tech-man.com

# ZC3-4AB Connections and Ratings

**Electrical ratings:**
24 VDC, 168mA max
5 VDC, 28mA max

**NOTE:** Use shielded wiring on strobe circuits when they are in the same raceway as audio wiring.

Maximum loop resistance:
Total Resistance for Each Zone
70.7V RMS:
6.5 ohms max, 25W (0.35A)
3.25 ohms max, 50W (0.71A)
2.28 ohms max, 70W (1.0A)
1.63 ohms max, 100W (1.4A)

25.2V RMS:
3 ohms max, 37.5W (1.5A)
2.5 ohms max, 45W (1.8A)

**Inputs**

| | |
|---|---|
| Speaker: | 25.2 or 70.7V RMS |
| Strobe: | 24V unfiltered, full wave rectified |

**Outputs**

| | |
|---|---|
| Supervisory: | 1.5 VDC, 0.06mA |
| Activated: | 25.2V RMS/24 VDC, 45W max, 1.8A max |
| | 70.7V RMS, 70W max, 1.0A max |

**Fuses**

| | |
|---|---|
| 25V | 3.15A, 250V (P/N 105-291200) |
| 70V | 1.6A, 250V (P/N 105-291202) |

End of line resistor:
24K, ½W, ±5% (P/N 140-820405)

Max card output:
25.2V RMS, 3.9A, 100W
70.7V RMS, 1.4A, 100W

Compatible Notification Appliances:
Refer to **Compatible Notification Appliances**, P/N 315-096363.

Electrical connections:
All wiring must be in accordance with Article 760 of NEC or the local building codes.

Some signal is lost in the zone wires due to line resistance. Refer to the tables on the next page to determine the decibel loss for various wire gauges and lengths. A reduction in load reduces the loss. Use the largest wire size possible for the smallest loss.



Technical Manuals Online! - http://www.tech-man.com

**SPEAKER ZONE DECIBEL LOSS**
**for 25.2V RMS, 35W load**

| Length | Gauge | | |
|---|---|---|---|
| | 14 AWG | 16 AWG | 18 AWG |
| (feet) | (loss in decibels) | | |
| 200 | 0.2 | 0.3 | 0.6 |
| 400 | 0.5 | 0.7 | 1.1 |
| 600 | 0.7 | 1.1 | 1.6 |
| 800 | 0.9 | 1.5 | 2.2 |
| 1000 | 1.2 | 1.8 | 2.7 |

**SPEAKER ZONE DECIBEL LOSS**
**for 70.7V RMS, 25W load**

| Length | Gauge | |
|---|---|---|
| | 16 AWG | 18 AWG |
| (feet) | (loss in decibels) | |
| 200 | 0.04 | 0.06 |
| 400 | 0.07 | 0.11 |
| 600 | 0.11 | 0.17 |
| 800 | 0.14 | 0.22 |
| 1000 | 0.18 | 0.27 |


Technical Manuals Online! - http://www.tech-man.com

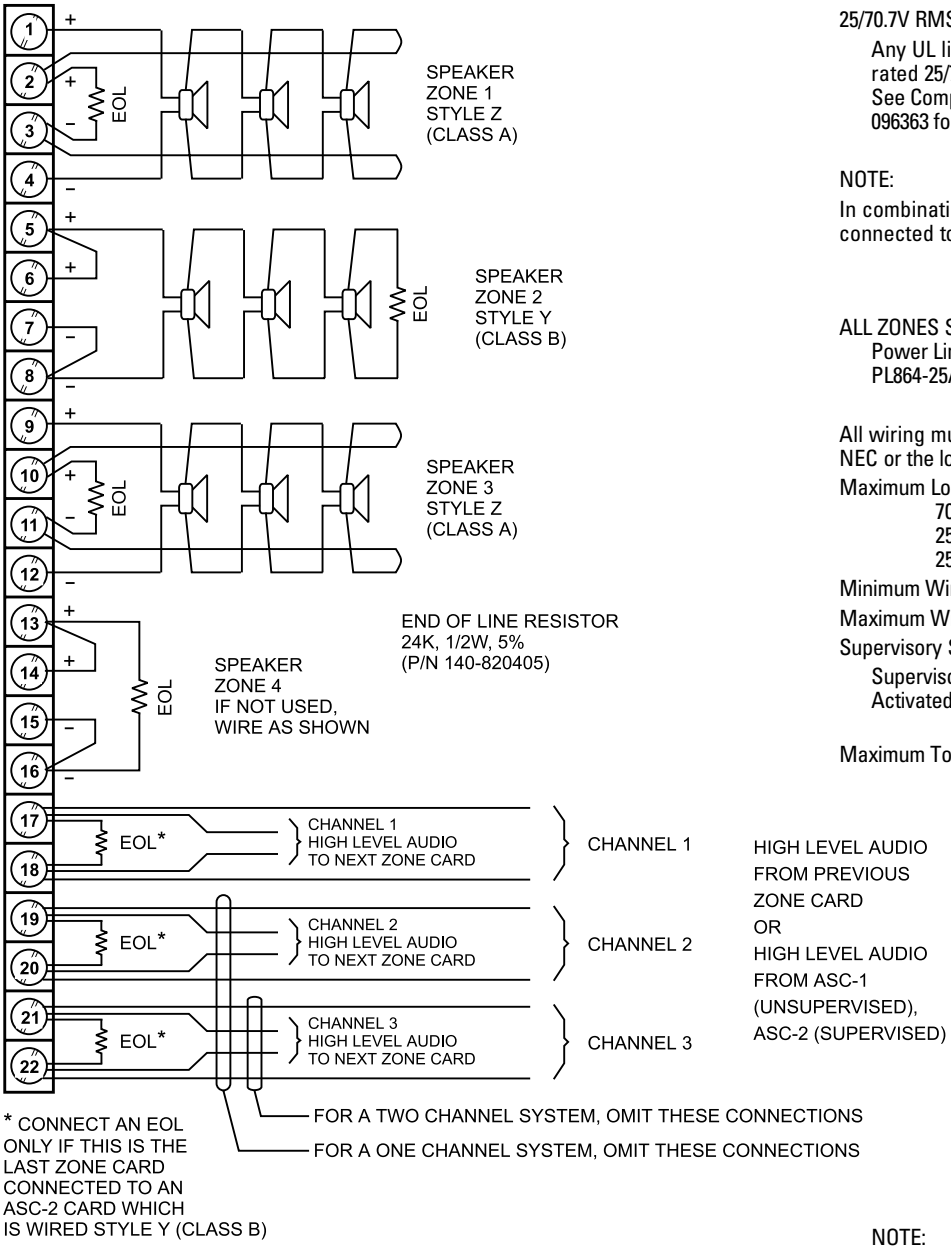


**ZC3-4AB Speaker Zone Wiring Diagram**

25/70.7V RMS SPEAKER UNITS:

Any UL listed Fire Protective Signaling Speaker rated 25/70.7V RMS may be connected to this circuit. See Compatible Notification Appliances, P/N 315-096363 for compatible speaker models.

NOTE:

In combination models, the speakers must be connected to separate circuits from the strobes.

ALL ZONES SUPERVISED, POWER LIMITED

Power Limiting is accomplished using the PLC-4 and PL864-25A, -70A, or -25S as required

All wiring must be in accordance with Article 760 of NEC or the local building codes.

Maximum Loop Resistance:
- 70.7V RMS, 6.5 ohms max, 25 watts (0.35A)
- 25.2V RMS, 3 ohms max, 37.5 watts (1.5A)
- 25.2V RMS, 2.5 ohms max, 45 watts (1.8A)

Minimum Wire Size: 18 AWG

Maximum Wire Size: 14 AWG

Supervisory Speaker Zone Connections

| | |
|---|---|
| Supervisory: | 1.5 VDC, 0.06mA |
| Activated: | 25.2V RMS, 45 watts max (1.8A) |
| | 70.7V RMS, 70 watts max (1.0A) |

Maximum Total Load: 25.2V, 3.9A, 100 watts
70.7V, 1.4A, 100 watts

NOTE:

A 2A, 250V fuse (P/N 105-292199) is included in the fuse kit for applications where a single zone of up to 100W at 70.7V is required. Place this fuse in the clips for the desired zone and connect the zone wires to the appropriate terminals. When this fuse is installed, the EL-410C/D amplifier that connects to this zone cannot be used for any other zones.



Technical Manuals Online! - http://www.tech-man.com

24 VDC STROBE UNITS:
See Compatible Notification Appliances, P/N 315-096363

ALL ZONES SUPERVISED, POWER LIMITED
Power Limiting is accomplished using the PLC-4 and PL864-25A, -70A, or -25S as required. 24 VDC power is available on the PLC-4.

All wiring must be in accordance with Article 760 of NEC or the local building codes.

Maximum Loop Resistance:
3.0 ohms max, 1.5A
2.5 ohms max, 1.8A

Minimum Wire Size: 14 AWG

Supervisory Strobe Zone Connections
Supervisory: 1.5 VDC, 0.06mA
Activated: 24 VDC, 45 watts max (1.8A)

Maximum Total Load: 24 VDC
4.0A power limited
14.4A non-power limited

End Of Line Resistor: 24K, ½W, 5% (P/N 140-820405)

NOTE:
ALL STROBE ZONE POLARITIES ARE SHOWN IN SUPERVISORY CONDITION.
Strobe devices are not polarity supervised and should be tested in compliance with NFPA Standards.

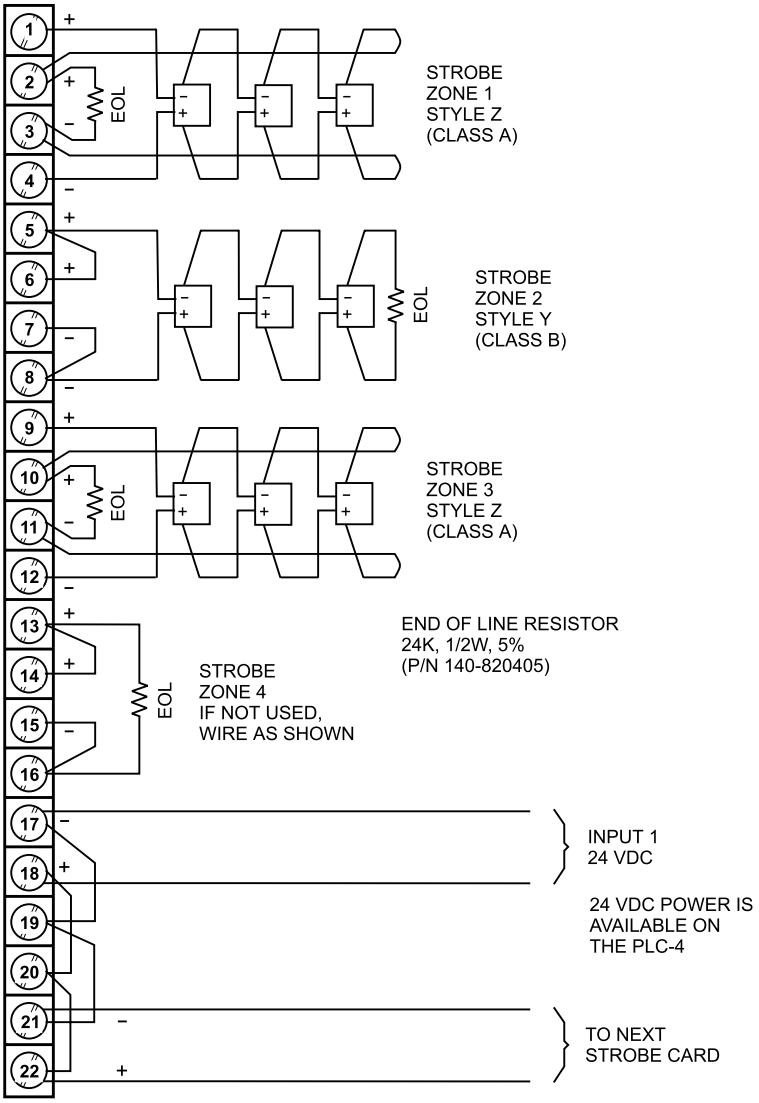


**ZC3-4AB Strobe Zone Wiring Diagram**



Technical Manuals Online! - http://www.tech-man.com

# ZCT-8B Connections and Ratings

**Electrical ratings:**

24 VDC, 78mA max
5 VDC, 33mA max

**Outputs**

Supervisory: 9 VDC, 9mA max
Activated: 12.5 VDC, 300mA max

**End of line resistor:**

10K, ¼W, ±1% (P/N 140-383467)

**Electrical connections:**

All wiring must be in accordance with Article 760 of NEC or the local building codes.

Terminate all unused outputs with an EOL resistor.

**COMPATIBLE TELEPHONE UNITS**

| | |
|---|---|
| FT-301 | Series Warden's Station |
| FT-302 | Series Warden's Station |
| FJ-303 | Jack |
| FJ-304 | Jack/Terminal Block |



Technical Manuals Online! - http://www.tech-man.com

ALL ZONES SUPERVISED, POWER LIMITED

All wiring must be in accordance with Article 760 of NEC or the local building codes.

Maximum Loop Resistance: 10 ohms

Minimum Wire Size: 18 AWG

Maximum Wire Size: 14 AWG

Supervised Telephone Zone Connections

| | |
|---|---|
| Supervised: | 9 VDC, 9mA max |
| Active: | 12.5 VDC, 300mA max |

Connect shield to negative zone terminal

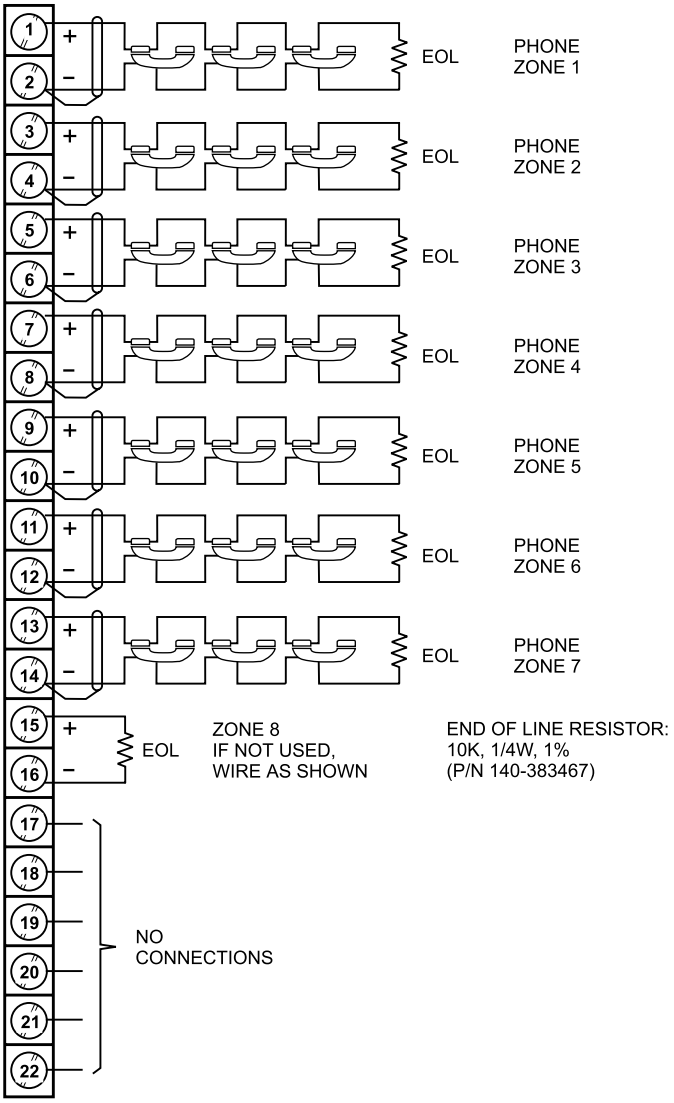


**ZCT-8B Telephone Zone Wiring Diagram**



Technical Manuals Online! - http://www.tech-man.com

# Compatible Devices

## TABLE 1
## CONVENTIONAL DEVICES

| Detector | Base | Installation Instructions | Compatible With | |
|---|---|---|---|---|
| DI-3/3H<br>DI-A3/A3H | DB-3S | 315-081943-15 | CZM-1B6 [1,6] | CZM-4 [4] |
| DI-B3/B3H | AD-3I/ILP<br>AD-3RI/3RP | 315-093234-4<br>315-086591-7 | CZM-1B6 [1,6] | CZM-4 [4] |
| DT-11 [5] | DB-11<br>DB-3S + DB-ADPT | 315-095429-1 | CZM-1B6 [1,6] | CZM-4 [4] |
| PBA-1191 [5,7] | PBB-1191 | 315-095424-2 | | CZM-4 |
| PE-3/3T | DB-3S<br>AD-3ILP<br>AD-3RP | 315-090875-6<br>315-093234-4<br>315-086591-7 | CZM-1B6 [1,6] | CZM-4 [4] |
| PE-11/PE-11T | DB-11<br>DB-3S + DB-ADPT<br>AD-11P/11PR | 315-094198-3<br>315-094198-3<br>315-095659-2 | CZM-1B6 [1,6] | CZM-4 [4] |
| **FM Approved Only** | | | | |
| DI-3IS + ISI-1 | DB-3S | 315-081943-15 | CZM-1B6 [2,6] | — |
| S121/S122 + ISI-1 | — | 315-085258C | CZM-1B6 [3] | — |

1. May use up to 15 detectors of any type.
2. May use up to 10 DI-3IS ionization detectors in addition to mechanical (non-energy storing) shorting devices.
3. May use up to five S121 or S122 flame detectors in addition to mechanical (non-energy storing) shorting devices.
4. May use up to 30 detectors of any type, except PB-1191.
5. Do not use with alarm verification.
6. Do not use detector operated accessories with CZM-1B6.
7. Only one PB-1191, and no additional device, can be connected to a CZM-4 initiating zone.
8. The FP-11 is only compatible with MXL Rev.10.0 or greater firmware.
9. Must use MXL/MXLV Rev 8.0 or greater firmware.
10. When the CSG-M is configured, the DUCT application must be selected when the device is used in an air duct housing or in a spot duct application.

## TABLE 2
## ANALOG ADDRESSABLE DEVICES

| Device | Base | Installation Instructions |
|---|---|---|
| CZM-1B6 | — | 315-095355-2 |
| FP-11/FPT-11[8] | DB-11, DB-X11RS<br>DB-3S + DB-ADPT<br>DB-X3RS + DB-ADPT<br>ADBI-60 + DB-ADPT | 315-095921-4 |
| FP-11 (d) [8, 10] | AD-11P/11XPR | 315-095659-2 |
| ICP-B6 | — | 315-095306-3 |
| ID-60I/60IH<br>ID-60IA/60IAH | DB-3S, DB-X3RS | 315-090287-2 |
| ID-60IB/601BH | AD-3I<br>AD-3XRI | 315-093234-4<br>315-093235-4 |
| ILI-1/1H<br>ILI-1A/1AH | DB-3S, DB-X3RS | 315-095387-1 |
| ILI-1B/1BH | AD-3I<br>AD-3XRI | 315-093234-4<br>315-093235-4 |
| ILP-1/ILPT-1 | DB-3S, DB-X3RS | 315-092594-5 |
| ILPT-1(d) | AD-3ILP<br>AD-3XRILP | 315-093234-4<br>315-093235-4 |
| ILP-2 [9] | DB-3S, DB-X3RS | 315-095028-1 |
| ILP-2(d) [9, 10] | AD-3ILP<br>AD-3XRILP | 315-093234-4<br>315-093235-4 |
| ILT-1 | DB-3S | 315-093336-1 |
| MSI-10/20 | — | 315-090903-3 |
| MSI-10B/20B | — | 315-093329-1 |
| MSI-B6F | — | 315-095302-1 |
| MSI-MB6 | — | 315-093613-1 |
| TRI-B6/6D/6R | — | 315-093315-3 |
| TRI-B6M | — | 315-094547-1 |
| TRI-S/D/R | — | 315-096242-2 |



Technical Manuals Online! - http://www.tech-man.com

Technical Manuals Online! - http://www.tech-man.com

# Device Analog Voltages

| Device | Input State | Voltage Response |
|---|---|---|
| CZM-1 | Normal | 0.50-4.19 |
| | Alarm | 4.20-5.00 |
| | Trouble | 0.00-0.47 |
| ID-60T-135<br>ILT-1 | Normal | 1.80-3.00 |
| | Alarm | 3.10-5.00 |
| | Trouble | 0.00-1.79 |
| MSI-10/20 | Normal | 1.80-3.00 |
| | Alarm | 3.10-5.00 |
| | Trouble | 0.00-1.79 |
| MSI-10B/20B | Normal | 1.80-3.00 |
| | Alarm | 3.10-5.00 |
| | Trouble | 0.00-1.79 |
| MSI-MB6 | Normal | 1.80-3.00 |
| | Alarm | 3.10-5.00 |
| | Trouble | 0.00-1.79 |
| MSI-B6F | Normal | 1.80-3.00 |
| | Alarm | 3.10-5.00 |
| | Trouble | 0.00-1.79 |
| TRI-60/60D/60R | Not Available | Not Available |
| TRI-B6/B6D/B6R | Not Available | Not Available |
| TRI-B6M | Not Available | Not Available |

| | | DETECTOR VOLTAGE RESPONSE | | | |
|---|---|---|---|---|---|
| Detector | Sensitivity | Alarm | Dust Threshold | Supervisory | Trouble |
| ID-60I/60IH<br>ID-60IA/60IAH<br>ID-60IB/601BH | LOW3 | 5.25-10.00 | 4.25-5.12 | 0.63-4.12 | 0.00-0.50 |
| | LOW2 | 5.12-10.00 | 4.12-5.00 | 0.63-4.00 | 0.00-0.50 |
| | LOW1 | 5.00-10.00 | 4.00-4.88 | 0.63-3.88 | 0.00-0.50 |
| | NORM | 4.88-10.00 | 3.88-4.75 | 0.63-3.75 | 0.00-0.50 |
| | HI-1 | 4.75-10.00 | 3.75-4.63 | 0.63-3.63 | 0.00-0.50 |
| | HI-2 | 4.63-10.00 | 3.63-4.50 | 0.63-3.50 | 0.00-0.50 |
| | HI-3 | 4.50-10.00 | 3.50-4.38 | 0.63-3.38 | 0.00-0.50 |
| ILI-1/1H<br>ILI-1A/1AH<br>ILI-1B/1BH | LOW3 | 5.25-10.00 | 4.25-5.12 | 0.63-4.12 | 0.00-0.50 |
| | LOW2 | 5.12-10.00 | 4.12-5.00 | 0.63-4.00 | 0.00-0.50 |
| | LOW1 | 5.00-10.00 | 4.00-4.88 | 0.63-3.88 | 0.00-0.50 |
| | NORM | 4.88-10.00 | 3.88-4.75 | 0.63-3.75 | 0.00-0.50 |
| | HI-1 | 4.75-10.00 | 3.75-4.63 | 0.63-3.63 | 0.00-0.50 |
| | HI-2 | 4.63-10.00 | 3.63-4.50 | 0.63-3.50 | 0.00-0.50 |
| | HI-3 | 4.50-10.00 | 3.50-4.38 | 0.63-3.38 | 0.00-0.50 |
| ID-60P | LOW3 | 5.12-10.00 | 4.12-5.00 | 0.88-4.00 | 0.00-0.75 |
| | LOW2 | 5.00-10.00 | 4.00-4.88 | 0.88-3.88 | 0.00-0.75 |
| | LOW1 | 4.88-10.00 | 3.88-4.75 | 0.88-3.75 | 0.00-0.75 |
| | NORM | 4.75-10.00 | 3.75-4.63 | 0.88-3.63 | 0.00-0.75 |
| | HI-1 | 4.63-10.00 | 3.63-4.50 | 0.88-3.50 | 0.00-0.75 |
| | HI-2 | 4.50-10.00 | 3.50-4.38 | 0.88-3.38 | 0.00-0.75 |
| | HI-3 | 4.38-10.00 | 3.88-4.25 | 0.88-3.25 | 0.00-0.75 |
| ILP-1/ILPT-1<br>ILPT-1(d) | LOW3 | 5.12-10.00 | 4.12-5.00 | 0.88-4.00 | 0.00-0.75 |
| | LOW2 | 5.00-10.00 | 4.00-4.88 | 0.88-3.88 | 0.00-0.75 |
| | LOW1 | 4.88-10.00 | 3.88-4.75 | 0.88-3.75 | 0.00-0.75 |
| | NORM | 4.75-10.00 | 3.75-4.63 | 0.88-3.63 | 0.00-0.75 |
| | HI-1 | 4.63-10.00 | 3.63-4.50 | 0.88-3.50 | 0.00-0.75 |
| | HI-2 | 4.50-10.00 | 3.50-4.38 | 0.88-3.38 | 0.00-0.75 |
| | HI-3 | 4.38-10.00 | 3.88-4.25 | 0.88-3.25 | 0.00-0.75 |
| ILP-2<br>(In Default/No Application Mode Only) | LOW3 | 5.12-10.00 | 4.12-5.00 | 0.88-4.00 | 0.00-0.75 |
| | LOW2 | 5.00-10.00 | 4.00-4.88 | 0.88-3.88 | 0.00-0.75 |
| | LOW1 | 4.88-10.00 | 3.88-4.75 | 0.88-3.75 | 0.00-0.75 |
| | NORM | 4.75-10.00 | 3.75-4.63 | 0.88-3.63 | 0.00-0.75 |
| | HI-1 | 4.63-10.00 | 3.63-4.50 | 0.88-3.50 | 0.00-0.75 |
| | HI-2 | 4.50-10.00 | 3.50-4.38 | 0.88-3.38 | 0.00-0.75 |
| | HI-3 | 4.38-10.00 | 3.88-4.25 | 0.88-3.25 | 0.00-0.75 |



Technical Manuals Online! - http://www.tech-man.com

Technical Manuals Online! - http://www.tech-man.com

# MXL Battery Calculations

Battery backup is a requirement for the MXL. To determine the size battery you must use, follow the procedures listed below. The MXL can charge a battery of up to 55 amp hours. A battery size calculation form is also provided.

1. Record all the modules required in the form on the following page.

2. Calculate each row across and place the total in the right column: **Total Standby 24 VDC Module Current**

3. Total the right-hand column and record it at the bottom of the form opposite **Total System Current.**

4. For **NFPA 72 Local, 72 Proprietary, and UL 1076 systems** multiply the total system current by 24 and record it at that **Total AH location.**

   or

   For **NFPA 72 Municipal Tie and 72 Remote Station systems** multiply the total system current by 60 and record it at that **Total AH location.**

   or

   For **FM Approved Deluge/ PreAction systems** multiply the total system current by 90 and record it at that **Total AH location**.

5. Multiply the AH Total by 1.3 to obtain the final battery amp hour capacity and record it opposite **Battery Size.**

Three battery models are UL listed for use with the MXL:

BP-61—24V, 15 AH

BTX-1—a set of 12V, 31 AH

BTX-2—a set of 12V, 55 AH

Select the battery that meets or exceeds the final calculated battery amp hour rating. Use an external battery box with the BTX-2 model.



Technical Manuals Online! - http://www.tech-man.com

| Module | Quantity | Standby 24 VDC Module Current (See Note 1) | Load Current Per Circuit | | |
|---|---|---|---|---|---|
| | | | End of Line Device | Device Current | Total Standby 24 VDC Module Current |
| MMB-1/-2 | | 175mA | | | |
| | | | 12mA per NAC | | |
| | | | | 1.1mA per device | |
| PSR-1 | | 70mA | 0 | 0 | |
| MKB-2 | | 5mA | 0 | 0 | |
| RCC-1/1F | | 75mA | 0 | 0 | |
| TSP-40 | | 70mA | 0 | 0 | |
| CSM-4 | | 10mA | | 0 | |
| | | | 12mA | | |
| CRM-4 | | 15mA | | | |
| | | | | 15mA per active relay | |
| CZM-4 | | 55mA | 0 | | |
| | | | | 3mA | |
| ALD-2I | | 105mA | 0 | | |
| | | | | 1.1mA per device | |
| XLD-1 | | 215mA | 0 | | |
| | | | | 1.1mA per device | |
| CMI-300 | | 30mA | 0 | 0 | |
| NET-4 | | 5mA | 0 | 0 | |
| NET-7 | | 30mA | 0 | 0 | |
| NET-7M | | 30mA | 0 | 0 | |
| NIM-1R | | 70mA | 0 | NA | |
| REP-1 | | 40mA | 0 | 0 | |
| PS-5A | | ¼ of 5V load | 0 | 0 | |
| PS-5N7 | | 150mA + ¼ of 5V load | 0 | 0 | |
| MOI-7 | | 120mA | 0 | 0 | |
| MOD-16 | | 2mA | 0 | 0 | |
| MID-16 | | 2mA | 0 | 0 | |
| CZM-1B6 | | 6mA | | | |
| | | | 5mA | | |
| | | | | NA | |
| ICP-B6 | | 18mA | 2.5mA | NA | |
| PIM-1 | | 10mA | 0 | NA | |
| PIM-2 | | (See Note 2) | 0 | NA | |
| PAL-1 | | (See Note 2) | 0 | NA | |
| D2300CP | | 50mA | 0 | 0 | |
| Silent Knight | | 60 mA | 0 | 0 | |
| ACM-1 | | 85mA | 0 | 0 | |
| TMM-1 | | 71mA | (See Note 3) | 0 | |
| VSM-1/VLM-1 | | 17mA | 0 | 0 | |
| VFM-1 | | 17mA | 0 | 0 | |
| ASC-1 | | 22mA | 0 | 0 | |
| ASC-2 | | 39mA | (See Note 3) | 0 | |
| OCC-1 | | 17mA | 0 | 0 | |
| BTC-1 | | 44mA | 0 | 0 | |
| RCM-1 | | 150mA | 0 | 0 | |
| ZAC-30 | | 160mA | 0 | 0 | |
| ZC1-8B | | 19mA | (See Note 3) | 0 | |
| ZC2-4AB | | 19mA | (See Note 3) | 0 | |
| ZC2-8B | | 19mA | (See Note 3) | 0 | |
| ZC3-4AB | | 18mA | (See Note 3) | 0 | |
| ZCT-8B | | 34mA | (See Note 3) | 0 | |
| | | | | **Total System Current** | |
| | | | | **NFPA Local (72A), Proprietary (72D), UL 1076 (MMB-2 only) - Total AH x 24 =** | |
| | | | | **NFPA Municipal Tie (72B), Remote Station (72C) - Total AH x 60 =** | |
| | | | | **FM Approved Deluge/PreAction - Total AH x 90 =** | |
| | | | | **Battery Size (with Alarm Reserve Correction) x 1.3 =** | |

NOTES

The following modules draw no 24 VDC current and do not need to be included in the battery calculations:

- OMM-1
- OMM-2
- MOM-2
- MOM-4
- MMM-1
- PLC-4
- TBM-2
- TSW-2

1. Use this column for battery size calculations.
2. Power is supplied by a separate UPS.
3. EOL currents included.



Technical Manuals Online! - http://www.tech-man.com

# MXL Power Supply Load Calculations

Each MXL System enclosure requires a power supply. This can be either an MMB-2, PSR-1, PS-5A or PS-5N7. To ensure that the power supply is not overloaded, complete the worksheet on the following page.

- Enter the quantity of each module in the enclosure.
- Calculate both the 24V and 5V loads for each row.
- Total the Active 24V and Active 5V columns.
- Ensure that both totals are within the power supply output ratings in the table to the right.

**POWER SUPPLY OUTPUT RATINGS**

| Module | Active 24 VDC Module Current | Active 5 VDC Module Current |
|---|---|---|
| MMB-2/MPS-6 | 6 amps | 500mA |
| MMB-2/MPS-12 | 12 amps | 500mA |
| PSR-1/MPS-6 | 6 amps | 800mA |
| PSR-1/MPS-12 | 12 amps | 800mA |
| PS-5A | 0 amps | 1 amp |
| PS-5N7 | 0 amps | 500mA |



Technical Manuals Online! - http://www.tech-man.com

The following modules draw no current from either the 5 VDC or 24 VDC power supplies and do not need to be included in these calculations:

- OMM-1
- OMM-2
- MOM-2
- MOM-4
- MMM-1
- PAL-1
- PIM-2
- PLC-4
- TBM-2
- TSW-2

| Module | Quantity | Active 24 VDC Module Current | Total Active 24 VDC Module Current (See Note 1) | Active 5 VDC Module Current | Total Active 5 VDC Module Current (See Note 2) |
|---|---|---|---|---|---|
| MMB-1/-2 | | (See Note 3) | | (See Note 3) | |
| PSR-1 | | (See Note 4) | | (See Note 4) | |
| PS-5A | | (See Note 5) | | (See Note 5) | |
| PS-5N7 | | (See Note 6) | | (See Note 6) | |
| MKB-2 | | 0 | 0 | 15mA | |
| RCC-1/1F | | 80mA | | 0 | 0 |
| TSP-40 | | 70mA | | 0 | 0 |
| CSM-4 | | 34mA + 1.5A max per circuit | | 30mA | |
| CRM-4 | | 75mA | | 30mA | |
| CZM-4 | | 720mA 4 zones in alarm | | 24mA | |
| ALD-2I | | 105mA + 1.1mA per device | | 0 | 0 |
| XLD-1 | | 215mA + 1.1mA per device | | 0 | 0 |
| CMI-300 | | 0 | 0 | 96mA | |
| NET-4 | | 0 | 0 | 20mA | |
| NET-7 | | 0 | 0 | 120mA | |
| NET-7M | | 0 | 0 | 120mA | |
| NIM-1R | | 0 | 0 | 160mA | |
| REP-1 | | 40mA | | 0 | 0 |
| MOI-7 | | 120mA | | 175mA | |
| MOD-16 | | 850mA max | | 2mA | |
| MID-16 | | 32mA max | | 2mA | |
| CZM-1B6 | | 50mA | | 0 | 0 |
| ICP-B6 | | 1.5A | | 0 | 0 |
| PIM-1 | | 0 | 0 | 25mA | |
| D2300CP | | 0 | 0 | 200mA | |
| Silent Knight | | 130mA | | 0 | 0 |
| ACM-1 | | 85mA | | 176mA | |
| TMM-1 | | 71mA | | 0 | 0 |
| VSM-1/VLM-1 | | 160mA | | 0 | 0 |
| VFM-1 | | 90mA | | 0 | 0 |
| ASC-1 | | 41mA | | 29mA | |
| ASC-2 | | 61mA | | 29mA | |
| OCC-1 | | 17mA | | 22mA | |
| BTC-1 | | 44mA | | 0 | 0 |
| RCM-1 | | 130mA | | 80mA | |
| ZAC-30 | | 3A at 30W | | 0 | 0 |
| ZC1-8B | | 170mA | | 31mA | |
| ZC2-4AB | | 167mA | | 30mA | |
| ZC2-8B | | 342mA | | 31mA | |
| ZC3-4AB | | 168mA | | 28mA | |
| ZCT-8B | | 78mA | | 33mA | |
| | | TOTAL | | TOTAL | |

1. Use this column to calculate total current from 24 VDC supply to make sure it is not overloaded.
2. Use this column to calculate total current from 5 VDC supply to make sure it is not overloaded.
3. MMB-2 supplies 5V at 500mA, 24V at 6A (MPS-6), 24V at 12A (MPS-12).
4. PSR-1 supplies 5V at 800mA, 24V at 6A (MPS-6), 24V at 12A (MPS-12).
5. PS-5A supplies 5 VDC at 1 amp max and no 24 VDC.
6. PS-5N7 supplies 5 VDC at 500mA max and no 24 VDC.



Technical Manuals Online! - http://www.tech-man.com

# Alarm Verification

The Alarm Verification feature provides the MXL with a way to verify an alarm from area type addressable smoke detectors connected to the analog loops or from standard smoke detectors connected to the CZM-4 module. This feature reduces the incidence of false alarms.

Revision level 2.00 and higher of the MXL supports Alarm Verification for CZM-1.

When a detector is supervised with Alarm Verification, it is turned off immediately after the System first detects alarm causing data from it.

The length of time that the detector is verified is fixed at 50 seconds. In MXL, an addressable detector is "turned off" by the System ignoring its data; a standard detector is turned off by the power actually being removed from the detector. After the turnoff period, the panel puts that detector into alarm if it has alarm causing data within 60 seconds of being turned back on. See the figure below for a graphic illustration of Alarm Verification.

You can select Alarm Verification for none, all, or any combination of addresssable smoke detectors.

Revision level 3.00 or higher of MXL supports a global verification feature called Device Confirmation. It provides adjustable A⇨B verification times for all addressable:

- Ionization detectors
- Photo detectors
- Ionization and photo detectors

**CAUTION**
Use only detectors which are subjected to air velocities of less than 100 feet per minute with Alarm Verification. Under dynamic air velocity conditions, smoke may be swept from a smoke detector after the initial alarm. That may cause a long delay before verification. **Do not select Alarm Verification for such applications.**

**A_____B_____C**

**Time⇨**

| | |
|---|---|
| A | Time at which the System initially recognizes an alarm from a smoke detector. |
| A⇨B | The 50 seconds during which the System ignores the alarm data |
| B⇨C | The 60 seconds during which the System alarms if the device is returning alarm data |

**Line Graph of Alarm Verification**



Technical Manuals Online! - http://www.tech-man.com

With Device Confirmation, the B⇨C verification time known as System Justified Alarm time is also adjustable. It is the same time used by both ionization and photo detectors. If a device is individually selected for alarm verification, the alarm verification feature takes priority over the device confirmation option. For adjustment ranges, refer to the **CSG-M Programming Manual**, P/N 315-090381.

There is an Override menu selection in the Test menu of revision level 3.00 or higher of MXL. Select *Alr_Verify* to disable all alarm verification or select *Alr_Confirm* to disable all alarm confirmation for a period of up to 4 hours or until manually re-enabled.



Technical Manuals Online! - http://www.tech-man.com

# Envirolink

## INTELLIGENT ENVIRONMENTAL COMPENSATION (IEC)

Envirolink is an optional feature that permits MXL to compensate automatically for environmental changes (such as dirt and dust buildup) in the analog voltage of an I Series photo or ion smoke detector. The selection of Envirolink devices is made in the CSG-M.

Once a detector is chosen to be covered by Envirolink, MXL stores and analyzes the analog readings of the smoke detector and adjusts the detector's threshold upward or downward, as necessary, to maintain a constant sensitivity.

As the analog voltage increases due to environmental factors, an equivalent increase in the detector's alarm threshold prevents factors other than smoke from causing an alarm. This method maintains the selected detector's sensitivity.

Typically, the analog voltage changes slowly over long periods of time for environmental factors, but changes quickly over short periods of time for actual smoke.

### Initial System Power-Up

When a new or modified CSG-M is loaded into a system, the MXL control panel goes through an initial system power-up. The MXL does **not** keep the Envirolink option where it was formerly applied when this new system powers up. The Envirolink memory re-initializes, and then MXL begins adjusting the alarm thresholds wherever Envirolink is selected in the new CSG-M.

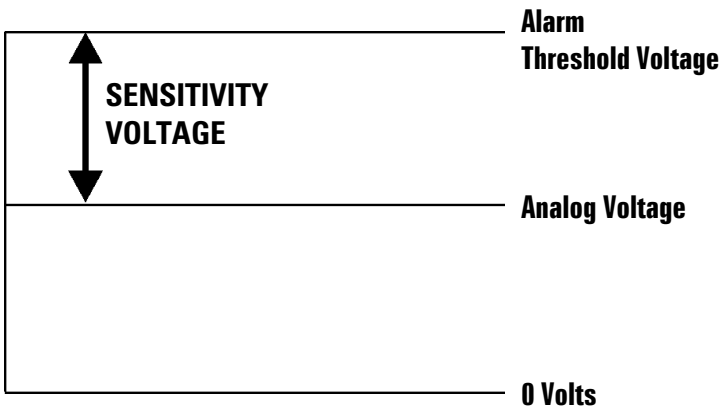


### Adjusting the Alarm Threshold When a New CSG-M is Uploaded

After MXL checks that the actual ID of a device with Envirolink agrees with the CSG-M, it adjusts the detector's alarm threshold according to the data stored. The first adjustment occurs after 100 hours of data accumulation. In the case of power cycling or resetting, adjustments begin within 90 seconds.



Technical Manuals Online! - http://www.tech-man.com

If a detector with Envirolink (IEC) reports an alarm condition before the detector's alarm threshold is adjusted, the alarm delays until the alarm threshold is adjusted. If the device continues to report an alarm condition once its alarm threshold is adjusted, the alarm reports.

If the CSG-M and the device ID do not agree, the IEC for that device does not activate until the trouble condition is removed from the system and the panel is reset.

## MXL Power On

When a system is brought on-line, or when there is a complete loss of power in an MXL-R enclosure containing detectors with IEC applied, the operator must perform a reset sequence for the IEC devices in that MXL-R and also reset the MXL.

When an MXL-R is powered the first time, and there is no data for IEC devices, MXL leaves these devices at the default alarm threshold. However, if former IEC data is available, MXL adjusts the device alarm threshold accordingly.

## Ongoing Adjustments of the Alarm Threshold

Environmental conditions usually cause a small change in the analog voltage over a long period of time. At regular intervals MXL collects analog data for each detector with IEC and adjusts the alarm threshold accordingly. MXL adjusts for both up and down changes in the analog voltage. In addition, if system power is lost, MXL adjusts the alarm thresholds as needed by using stored data.

## Indicating IEC Trouble Conditions

A trouble condition involving the IEC may be annunciated by the MXL as:

```
PRE-DIRTY ANALOG VOLT. REACHED
```

OR

```
IEC LIMIT REACHED. SERVICE REQ
```

The trouble conditions shown above are annunciated on a detector-by-detector basis as each detector is checked.

MXL annunciates a trouble condition for a detector when its alarm threshold reaches a predetermined limit. The operator should acknowledge the trouble, clean the detector if possible, and reset the control panel. If the detector is not cleaned, the control panel annunciates this trouble condition after every panel reset until the detector is cleaned. When it is cleaned, that is detected by the Auto Clean Detection feature.

## Automatic Cleanliness Detection

MXL automatically detects when an IEC detector was cleaned and checks whether the detector is considered clean by MXL's standards. If the detector is clean, IEC data for that device is reset to clean levels, and the following message prints:

```
Detector Cleaned
```



Technical Manuals Online! - http://www.tech-man.com

**NOTE:** Automatic detection and documentation of the cleaning of a detector by MXL may take as long as 1 hour. To avoid this, use the ***Det cleaned*** option in the Test menu to avoid automatic clean detection. When you enter the address of the detector that was cleaned, MXL adjusts that detector's Norm sensitivity setting reference.

## Detector Cleaned

IEC must be enabled in the CSG-M in order to have access to the **Det_cleaned** option through the MXL Annunciator Panel.

At the Test menu, use the Left or Right arrow key to cause the **D** in **Det_cleaned** to start blinking:

```
TEST: OVERRIDE DET_CLEANED
```

Press **ENTER** when the **D** is blinking to select **Det_cleaned.**

The System asks you to type the module and device numbers.

- Type the three-digit module number and the three-digit device number (mmm/ddd), including all leading zeroes.
- Press **ENTER**.

After entering the module-device, MXL checks whether the device is subject to IEC. If the device is not subject to IEC, or if IEC is not enabled for the system, an error messages displays:

```
DEVICE NOT SUBJECT TO IEC
IEC NOT ENABLED IN CSG-M
```

If the device is an IEC detector, MXL displays and prints the time, date, device, and custom message of the cleaned device.



Technical Manuals Online! - http://www.tech-man.com

Technical Manuals Online! - http://www.tech-man.com

# Latching/Non-Latching Troubles

## This feature is not available for Networked MXL Systems.

When the Latching/Non-Latching (self restoring) trouble option is set to **YES** in the CSG-M, MXL automatically removes trouble conditions from the trouble queue when the **OUT OF TROUBLE** condition is detected.

For NFPA 72 Local, 72 Municipal Tie, and 72 Remote Station systems, the following criteria must be met in order for the trouble to be removed from the trouble queue:

- Module and device numbers must be identical
- Trouble type must be identical
- Both IN/OUT conditions must be recorded in the queue
- All printers being used must print both IN/OUT conditions

When all these conditions are met, the MXL removes both the in and out occurrence of this trouble from the queue. If there are no other events in the system (alarm, supervisory, trouble, or security), MXL returns to the **SYSTEM NORMAL** display (without a system reset). If there are other events in the system, MXL updates the display.

For NFPA 72 Proprietary systems, the following criteria must be met if the trouble is to be removed from the trouble queue:

- Module and device numbers must be identical
- Trouble type must be identical
- Both IN/OUT conditions must be recorded in the queue
- All printers being used must print both IN/OUT conditions
- Both IN and OUT conditions must be acknowledged and printed

When all these conditions are met, MXL removes both the in and out occurrence of this trouble from the queue. If there are no other events in the system (alarm, supervisory, trouble, or security), MXL returns to the **SYSTEM NORMAL** display. If there are other events in the system, MXL updates the display.

Not all troubles can be removed from the trouble queue. If there is no **OUT** condition reported (i.e., **Class A loop trouble**), MXL requires an acknowledgement and reset.



Technical Manuals Online! - http://www.tech-man.com

Technical Manuals Online! - http://www.tech-man.com

# Installing A Security Point

**WARNING: These circuits are intended for 24 hour alarm monitoring only.**

UL 1076 requires a TSW-2 tamper switch as well as a TSP-40 printer. Only Models TRI-60/-60D/-60R or TRI-B6/-B6D/-B6R may be used as security points. A **COMMUNICATION FAILURE** with a TRI device configured for **SECURITY** results in a **SECURITY ALARM** as well as a communication trouble. When installing a TRI device in the CSG-M, be sure to set the device usage field to security; otherwise, the device usage defaults to fire alarm.

**CAUTION:**

- When setting the device address using the FPI-32, select the normally closed alarm causing input.
- Connect only one switch per TRI input.

**For proprietary burglary application (UL 1076):**

- Use a TSW-2 tamper switch to monitor the main enclosure.
- Monitor each TRI-60/-60D/-60R or TRI-B6/-B6D/-B6R related to this application for 24 hours by using a listed motion detector (to prevent tampering).

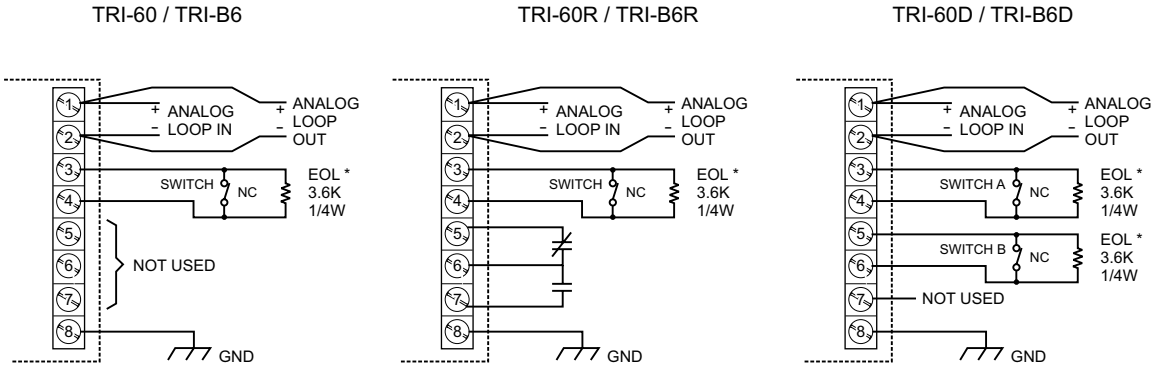


* END OF LINE DEVICE: P/N 140-820185
REFER TO **TRI INSTALLATION INSTRUCTIONS**,
P/N 315-092329 OR 315-093315, AS APPLICABLE

**Installing the Security Point for UL 1076**



Technical Manuals Online! - http://www.tech-man.com

Technical Manuals Online! - http://www.tech-man.com

# Application Specific Detection (ASD)

Application Specific Detection (ASD) allows the system designer (and anyone with Control menu access) to program an ILP-2 or FP-11 detector's sensitivity, pre-alarm threshold, and other alarm-related parameters using English descriptions of the detector's environment (application). This eliminates the need for detailed knowledge of smoke detector terminology and operation. The designer can set all of the critical detector parameters by simply selecting an application description that closely fits the one where the detector is to be installed.

For example, to use ASD to select the optimal parameters for a detector in a hotel lobby, select the LOBBY application in the CSG-M for that device. The MXL will automatically transmit the factory determined sensitivity, pre-alarm threshold, and detection algorithm (R-algorithm) to the corresponding device. This eliminates the guesswork of selecting these parameters for different environments. Changes made at the control panel using the Control menu (Change_Apps) override the ASD settings made in CSG-M for that ILP-2 or FP-11 device until the next power-on reset.

**ASD SUBMENU ABBREVIATIONS**

| MXL Menu | CSG-M Application | Description |
|---|---|---|
| **NONE** | Disable | No Applications (Standard Photoelectric Detector) |
| **OFFC** | Office (Retail) | Reasonably clean, climate controlled atmosphere |
| **WHSE** | Warehouse (Light Manufacturing) | Airborne dust, equipment, fork truck and light to medium dock area exhaust fumes |
| **LOBY** | Lobby | Relatively clean area, temperature changes, cellular phones, smoking |
| **COMP** | Computer Room | Very controlled environment, clean, temperature closely regulated, high cost clean machinery operating, no smoking, high air velocity |
| **DORM** | Dormitory | Airborne dust and temperature changes, living quarters, cooking fumes, smoking |
| **HLTH** | Healthcare | Higher level risk, relatively clean, electronic equipment |
| **PARK** | Parking Garage | Airborne dust, car and diesel fumes, temperature swings |
| **UTIL** | Utility (Transformer) Room | Normal to somewhat dirty environment, heat from running equipment |
| **PREC** | Precious Storage (Sensitive Environment) | Sensitive materials or equipment storage, clean dust-free environment, earliest warning desired |
| **HOST** | Hostile Environment | Dirty, dusty, humid, operating equipment, RF present, wide temperature swings |
| **DUCT** | Duct (Open air or duct housing) | Dirty, dusty, humid, wide temperature swings, high air velocity |



Technical Manuals Online! - http://www.tech-man.com

## Testing ASD Devices

Since one of the parameters transmitted to the detector adjusts the detection algorithm (R-algorithm) to reduce false alarms, it is necessary to defeat ASD (or at least the R-algorithm) when smoke testing ASD devices. The **Test ASD_Devices** menu option has been supplied for this purpose. When ASD devices are to be smoke tested, the **Test ASD_Devices** option must be enabled. This disables the application specific detection R-algorithm so the detector will alarm using the standard test gas method. If the **Test ASD_Devices** option is not enabled prior to smoking the device, the tester may find it extremely difficult to alarm the detector since the algorithms are designed not to be fooled by a deceptive phenomenon such as test gas.

Once the **Test ASD_Devices** option has been enabled using the test menu, the tester should wait 3 minutes before attempting to test the ASD devices. This time may vary slightly with the number of ALDs and ASD detectors in a system. This will ensure that the ASD R-algorithm has been defeated for test purposes. The system will not reset until the **Test ASD_Devices** option has been disabled.



Technical Manuals Online! - http://www.tech-man.com

# Testing

To ensure maximum safety, follow the procedure described below. To ensure proper and reliable operation, we recommend the following inspection and testing schedule:

## Every Six Months

1. Check the sensitivity of each detector, using the **List Sensitivity** menu. Refer to Appendix B - Device Analog Voltages for a list of acceptable detector sensitivity ranges.

2. If the **PARTIAL SYSTEM DISABLE** LED is lit, check that all appropriate detectors are armed, using the Control **Arm/Dis** menu.

3. Activate a detector or alarm initiating device. To test for *Go/No Go* operation, use **CERBERUS PYROTRONICS™** Test Gas, P/N 315- 282747, following the instructions on the label. Check that the detector LED lights and that the proper indication is given at the Control Panel.

4. Verify that an alarm can be acknowledged and that the System can be silenced and reset

5. Verify the time and date setting of the System clock.

## Every Year

1. Check that the System operates as programmed by CSG-M and in accordance with specifications.

2. Perform any other applicable tests required by national or local fire codes.

**IMPORTANT**
**If the System is connected to the Fire Department, or activates an external System (for example, a leased line connection), disarm the related outputs before servicing to prevent activation. Notify persons in the facility that you are conducting a System test so that they can ignore any alarms that sound during testing. Be sure to reset the System at the end of the inspection.**



Technical Manuals Online! - http://www.tech-man.com

Technical Manuals Online! - http://www.tech-man.com

# MXL Trouble Messages

| Trouble Message | The Probable Cause Is: |
|---|---|
| +15V Fault | OCC-1 module defective, ZAC-30 module defective, OMM-1 pins shorted. |
| 24 Volts on Battery Backup | A PSR-1 has switched its 24V supply to battery due to an AC failure or brownout. |
| AC Fail or Brownout | Primary AC power is missing or below the brownout level; the System is running on battery backup. |
| Airflow Too Low | AnaLASER airflow is below programmed threshold. |
| Airflow Too High | AnaLASER airflow is above programmed threshold. |
| Amplifier 1 Trouble<br>Amplifier 2 Trouble<br>Amplifier 3 Trouble | Amplifier output, wiring from OCC-1 to amplifier input is incorrect. |
| Amplifier 1 Backed Up<br>Amplifier 2 Backed Up<br>Amplifier 3 Backed Up | Backup amplifier is active and described amplifier has failed. |
| Amplifier 1 Signal Loss<br>Amplifier 2 Signal Loss<br>Amplifier 3 Signal Loss | • Riser wiring defective.<br>• ASC-1 switch setting is incorrect.<br>• Audio output from TBM-2 is not present.<br>• ACM-1 or TBM-2 is defective.<br>• Wiring from TBM-2 to OCC-1 is defective. |
| AnaLASER Power Trouble | Problem with AnaLASER power supply. |



Technical Manuals Online! - http://www.tech-man.com

| Trouble Message | The Probable Cause Is: |
|---|---|
| ASD Testing Enabled | Application specific detector testing is enabled. The applications feature is disabled during testing. |
| Audio Fault Isol-St 4Rx<br>Audio Fault Isol-St 4Tx<br>Audio Fault Isol-St 7Rx<br>Audio Fault Isol-St 7Tx | This trouble will be reported by the RCM-1 module on either side of shorted riser, denoting where the short has occurred. |
| Audio Output Class A Active | Broken wire or missing EOL on riser. |
| Audio Output Shorted | Shorted wire on riser. |
| Audio Riser 1 Trouble<br>Audio Riser 2 Trouble<br>Audio Riser 3 Trouble | Wiring from TBM-2 to EOL. EOL missing, wiring to EOL is shorted. |
| Audio Riser 1 Class A Active<br>Audio Riser 2 Class A Active<br>Audio Riser 3 Class A Active | Riser wiring open, Class A jumpers missing. |
| Aux Power Voltage Low | PSR-1 24V output is overloaded. MPS-6/-12 harness is missing. |
| Aux Pwr Class A Fail Neg | The negative side of the CZM-1B6 power circuit is open. |
| Aux Pwr Class A Fail Pos | The positive side of the CZM-1B6 power circuit is open. |
| Aux RS232 Transmit Fail | The NET-7 detected a failure on its auxiliary programming port. |
| Backup Tone Card | Backup Tone Card is defective or missing. |
| Battery Backup Invalid | A battery is connected, but not selected in CSG-M. |
| Battery Fuse/Wiring Open | Either the battery is not connected, or the battery fuse is blown, or the battery voltage is too low. |


Technical Manuals Online! - http://www.tech-man.com

| Trouble Message | The Probable Cause Is: |
|---|---|
| Carrier Lost | CMI-300 to CXL communications problem where the CMI-300 does not see the CXL's modem carrier (tone). No data is being transmitted. |
| Class A Loop Trouble | If Class A: The initiating circuit at this module address has an open.<br>If Class B: Wired zones are missing the Class A jumpers. |
| CMI-300 General Trouble | Communications trouble between the CMI-300 and the CXL. Data is attempting to transmit. |
| Configuration Error | • A configuration error where the PSR-1 switch setting does not agree with CSG-M.<br>• Jumper plug on P10 of PSR-1 is missing when using an MPS-6. |
| CSGM Out Of Date | This MXL (node) will need to be updated with the latest CSG-M networked program. A network CSG-M has been loaded on another MXL (node) and has a reference to this MXL (node). |
| Daily Detector Test Abnormal | Device is defective. |
| Default Trouble Active | PSR-1 remote panel has its local trouble bus active. |
| Detector Trouble | AnaLASER detector in need of repair. |
| Dev Detected Waveform Error | An analog device reports this trouble if it receives an unknown polling waveform. |
| Device Communication Error | An analog device whose response has failed error checking. |



Technical Manuals Online! - http://www.tech-man.com

| Trouble Message | The Probable Cause Is: |
|---|---|
| Device LED Turned On | A device LED was turned on from the Test menu of the MXL. |
| Device Multiple Response | Two or more analog devices at the same address have reported during normal supervision. |
| Device Out of Calibration | This message is used with XLD and is the same as the XL-3 message, *Response out of window at cal.* |
| Device Receive Error | An analog device reports this trouble if it receives an incorrect analog transmission. |
| DMC-1 In Record Mode | The DMC-1 digital message unit is recording its message. |
| DMC-1 Tone Trouble | DMC-1 supervisory tone has failed. Replace the DMC-1 Module. |
| DMC-1 Phrase Trouble | The CSG-M has a non-specified phrase. Reconfigure the CSG-M. |
| DMU 1 Failure<br>DMU 2 Failure | These messages will be displayed if the DV-100 message unit activates a trouble causing TRI module, which is programmed in the ACM network menu for a DMU trouble module address. |
| Event log 80% full | Use extract history in CSG-M to reset the MXL history log. |
| Event log 90% full | Use extract history in CSG-M to reset the MXL history log. |
| Function Recursion Trouble | The number of evaluations of output logic required until outputs are stable has exceeded the system maximum. Rewrite CSG-M to simplify functions. |
| Generic Input Terminal | Device being monitored by this OCC-1 input is in a fault condition. |



Technical Manuals Online! - http://www.tech-man.com

| Trouble Message | The Probable Cause Is: |
|---|---|
| Global Audio Riser-St 4 | Either a short or open circuit on the RCM-1 B Riser, Style 4 pair. |
| Global Audio Riser-St 7 | Either a short or open circuit on the RCM-1 B Riser, Style 7 pair. |
| Ground Fault Minus | Low impedance to the negative side of one of the field wiring circuits to earth ground. |
| Ground Fault Plus | Low impedance to the positive side of one of the field wiring circuits to earth ground. |
| High Battery Voltage | Battery voltage is too high because battery has been overcharged. Battery and/or charger are possibly defective. |
| History Manually Turned Off<br>History Manually Turned On<br>History Manually Erased | History Log has been manually changed (Turned Off / Turned On / Erased) using the MKB. |
| IEC Limit Reached. Service Req | Detector environmental compensation has reached UL limit. Detector is very dirty and requires cleaning. |
| IEC/Pre-alarm Memory Error | An unsuccessful attempt was made to access the IEC area of flash memory. Is IEC-1 module present? Is segmented flash present? |
| Incorrect Custom Phrase Count | The number of phrase counts in the DMC-1 does not agree with the number of phrase counts in the CSG-M. |
| Incorrect Device ID | An analog device whose type or usage does not agree with the CSG-M assignment at that address. |
| Incorrect Enclosure | A module was detected in the wrong MXLR enclosure. This feature of NET-7s can be disabled in Rev. 3.01 and higher of CSG-M. |



Technical Manuals Online! - http://www.tech-man.com

| Trouble Message | The Probable Cause Is: |
|---|---|
| Incorrect Library Version | There is an incompatibility between the library CSG-M selection and the DMC-1 library chip. There is an incorrect factory recorded selection. |
| Incorrect Node Address | Address on NIM-1R is incorrect. |
| Incorrect Submodule ID | Incorrect OCC-1 or ACM-1 submodule installed or programmed incorrectly. |
| Input Dev Response Too Low | Input wiring to TRI, ICP-B6, and CZM-1B6 modules has an open circuit or no EOL. Loss of power to ICP-B6 or CZM-1B6 modules. Smoke detector chamber defective. |
| Input Device Not Responding | A device assigned in CSG-M is not reporting at its address. |
| Input Device Requires Service | An ion or photo detector has exceeded the 80% dust threshold. |
| Input Disarmed | An initiating device was disarmed through the Control menu. |
| Keyswitch Activated (CANADA) | This is a trouble type for activation of Canadian manual station keyswitch if no alarm is present. |
| Lamp Supervision Trouble | MID-1 input trouble when used for lamp supervision. |
| Local Audio Riser | Open circuit detected on the RCM-1 D Riser. |
| Log FULL, Events Will Be Lost | History Log is full. Use extract history in CSG-M to reset the MXL history log |
| Loss of 24V Input Power | A CZM-4 has lost its 24 VDC input. |
| Low Battery Voltage | MMB or PSR-1 low battery condition. |
| Low IEC Voltage, Service Req | Defective device. |


Technical Manuals Online! - http://www.tech-man.com

| Trouble Message | The Probable Cause Is: |
|---|---|
| Memory Error In RAM Test | An error was detected in RAM memory IC 112 or IC 113. |
| Memory Error in ROM test | An error was detected in the EPROM IC 111 or IC 110 |
| Mic Input Trouble | Microphone input open or shorted. |
| Mic Key Trouble | Microphone push button switch wires shorted or open. |
| Mic Pre-amp Trouble | Pre-amp for microphone in ACM-1 failed and backup is switched. |
| Missing Device ID Response | An ALD module has not returned an ID Poll response for **any** of its detectors or devices. **NOTE:** This trouble will accompany *module not responding* for missing ALD modules. |
| Module A/D Convert Fail | The PSR-1 at this address has a failed analog-to-digital converter. |
| Module Address Buffer Full | The NET-7 enclosure checking has failed. The maximum number of 21 module addresses was exceeded. |
| Module Comm Failure | When network communications are interrupted, and then restored, all module addresses affected report this trouble. |
| Module Not Responding | The module assigned in CSG-M at this address is not responding. |
| Module RAM Failure | The CRM-4, CSM-4, or CZM-4 at this address has determined that its internal RAM is not operating properly. |
| Module ROM Failure | The module at this address has a ROM checksum failure. |



Technical Manuals Online! - http://www.tech-man.com

| Trouble Message | The Probable Cause Is: |
|---|---|
| MOI-1 Local Trouble | This trouble is reported when the TRBL IN input of the MOI-1/-7 is driven high. |
| MOI-1 Voice System Trouble | This condition is caused by driving the TRBL IN of the MOI-1/-7 high with voice modules configured in CSG-M for this module. |
| MOI-1 Zone Disarmed | Output of an MOI-1/-7 (MOD-16 or VPM-5) has been disarmed at the MXL. |
| MXL Network Failure | The MKB/RCC-1 has lost communication with the MNET. |
| Network CSGM Upload Needed | A function was added to an XNET node and had a reference to another node. This function shall be added to **each** node it references. |
| Network Disabled | The remote PSR-1 has its MNET network disabled switch set incorrectly. |
| Network Input Disarmed | A point on another XNET node has been disarmed. |
| Network Loop A Failure | The Style 7 primary (A) RS485 MNET network loop has failed. |
| Network Loop B Failure | The Style 7 secondary (B) RS485 MNET network loop has failed. |
| No CSG - Default In Use | No CSG-M custom programming was found in FLASH memory so the system is using the default CSG-M. |
| Node Disconnected | XNET node was logically disconnected from the NCC. |
| Node Multiple Response | Two nodes are programmed at the same address. |
| Node Not Responding | XNET wiring and/or NIM-1R module is defective. |


Technical Manuals Online! - http://www.tech-man.com

| Trouble Message | The Probable Cause Is: |
|---|---|
| OCC-1 Degrade Mode | If this is the only problem present, the OCC-1 module and/or OMM-1 motherboard is defective. |
| Out of RAM Call Pyrotronics | The configuration upload is too large. |
| Out of Tasks Call Pyrotronics | Contact the Siemens Building Technologies, Inc. Technical Services Department. |
| Output Disarmed | Indicates that an output point has been manually disarmed. |
| PRE 1 Level<br>PRE 2 Level | AnaLASER device has reached its pre-alarm setting. |
| Pre-alarm | Device has reached its pre-alarm setting. |
| Pre-dirty Analog Volt. Reached | IEC compensation has reached a level where the detector should be cleaned. |
| Printer Off Line/Fault | A supervised printer is not responding. |
| Printer Out Of Paper | The TSP-40 has run out of paper. |
| PSR-1 Driver Disarmed | A PSR-1 relay output device has been disarmed. |
| Relay Coil Open | The relay coil at this address is open. |
| Relay Disarmed | The relay at this address has been disarmed from the Control menu. |
| Relay Driver Inoperative | The relay on the CRM-4 or CSM-4 at this address does not operate when commanded to energize. |
| Relay Supervision Failure | The relay at this address has a coil failure. |
| Remote Node Disconnected | XNET node was logically disconnected from the NCC. |



Technical Manuals Online! - http://www.tech-man.com

| Trouble Message | The Probable Cause Is: |
|---|---|
| ROM SW Version Error | Module at the address noted needs an update to latest available software level. |
| Signal Circuit Disarmed | The NAC at this address was disarmed from the Control panel. |
| Signal Circuit Loop Open | The NAC at this address has a broken wire or missing EOL device. |
| Signal Ckt Loop Shorted | The NAC at this address is shorted, or the EOL device is the wrong value, or the notification appliances are not polarized or are connected backwards. |
| Signal Module Zone Code | Zone code failure on the CSM-4 module. |
| Software Key Violation | Incorrect Software Key Installed (NCC only). |
| Stack Fault  Call Pyrotronics | When the message *Call Pyrotronics* appears, a four letter Alpha ID will be displayed. This number is necessary when reporting the problem to Siemens Building Technologies, Inc. |
| Strobe Power Fault | PL 864-25S module is being monitored by this OCC-1 input and is in a fault condition. |
| Style 4 Network Mode | The Style 4 jumper on a NET-7 is found on a Style 7 system. Move the jumper to the Style 7 position. |
| Style 7 Network Mode | The Style 7 jumper on a NET-7 is found in the Style 4 mode. Move the Style 7 jumper to the Style 4 position. |
| Sub-module Communication Error | OCC submodule is defective. |
| Sub-module Multiple Response | Two submodules at the same address. |
| Sub-module Not Responding | Check device at the designated location. |


Technical Manuals Online! - http://www.tech-man.com

| Trouble Message | The Probable Cause Is: |
|---|---|
| Sys Halt Too Many ALD/ACM | The maximum allowable number of ALD-2Is and ACM-1s has been exceeded in an MXL system with MMB-2, Rev. 9. If this is a new system, reconfigure the CSG-M. If this is an existing system and needs an upgrade, contact Siemens Building Technologies, Inc. Technical Support. |
| System Commissioning Mode | The system has been put in the commissioning mode. |
| System Signal Power Failure | A CSM-4 has lost power to its output circuits. |
| Tamper Switch | This is a security-type message for the tamper switch on the MMB-1/-2 or PSR-1 board when the system is selected for UL 1076 operation. |
| Telephone Riser Trouble | Telephone riser shorted or open. |
| Tone Generator Trouble | Tone generator on ACM-1 failed. |
| Too Many ALD-2s | More than 24 ALD-2Is are installed on the system. This is beyond the maximum allowed (Pre 9.0 firmware systems). |
| Trouble Causing Input | A device programmed on the system as *trouble causing* has been activated and has changed state. |
| Trouble Type Not Defined | Unspecified trouble has been received from this address. |
| Troubles Summarized | While the system is in the commissioning mode, the modules will display this message in lieu of all the devices on this module. |
| Unspecified Dev Responding | An analog device has reported at an address not assigned in CSG-M. |



Technical Manuals Online! - http://www.tech-man.com

| Trouble Message | The Probable Cause Is: |
|---|---|
| Unspecified Mod Responding | A module has reported at an address not assigned in CSG-M. |
| Unspecified Node Responding | • NIM-1R address on another node is incorrect.<br>• The network CSG-M is incorrect. |
| Unspecified Submodule Responding | A submodule has been reported at an address not assigned in CSG-M. |
| WALKTEST Activated | The MXL has been placed in the walk test mode. |
| Warm Reset | The hardware reset input to the MXL was used. |
| Watch Dog Circuit Triggered | The watch dog circuit on the MMB-1/-2 triggered. |
| Zone Loop Open | Broken wire on CZM-4 circuit. |
| Zone Loop Shorted | Shorted wire on CZM-4 circuit. |
| Zone Power Loss | The CZM-4 zone at this address has lost its 24 volt input. |


Technical Manuals Online! - http://www.tech-man.com

# Power Limited Wiring

For power limited wiring refer to the following Installation Instructions:

| Enclosure | Installation Instructions |
|---|---|
| LLM-1 | 315-093530-2 |
| MME-3 | 315-094883-2 |
| MLE-6 | 315-094970-1 |
| MXL-RK1 | 315-093402-6 |
| PLC-4 | 315-093312-1 |



Technical Manuals Online! - http://www.tech-man.com

Technical Manuals Online! - http://www.tech-man.com

# New Two Stage Alarm

## For use in Canada only with MXL software version 6.04 and higher

To satisfy the many requirements of Canadian Two Stage alarm, this MXL feature has been redesigned. The new implementation of Canadian Two Stage Alarm is available with revision 6.04 of MXL firmware and revision 6.07 of CSG-M. All new installations of Two Stage Alarm should use the new implementation. However, backwards compatibility with the original Two Stage Alarm has been maintained.

The hardware requirements for the new Two Stage Alarm are as follows:

- MXL firmware revision 6.04 or higher
- CSG-M revision 6.07 or higher
- CSM-4s must contain revision 4 or higher

The new Two Stage implementation is designed for flexibility. It allows the system designer/programmer to define how Two Stage alarm should function.

```
                    Fire Protection Company Name
   CSG-M Memory=2864 used, 243212 free   CONFIG => TWOSTG
                     Other System Flags

    Sensitivity Adjustments Allowed -----------------> NO
    Block Alarm and Trouble Acknowledge Allowed -----> YES
    Multienclosure System ---------------------------> NO
    Device disarm through RESET ---------------------> NO
    Self restoring troubles -------------------------> NO
    NFPA 71 connection ------------------------------> NO
    NET 7 panel checking ----------------------------> NO

    Network Repeater Used ---------------------------> NO
    Independent Function Keys -----------------------> NO
    New Two Stage Configuration ---------------------> YES

Move Cursor to Select, ENTER to TOGGLE     ESC = Prev. Menu
```

**CSG-M Other System Flags Menu**



Technical Manuals Online! - http://www.tech-man.com

## Selecting Two Stage

A new selection in the CSG-M determines which version of Two Stage Alarm is used in an MXL. In the *Other System Flags* menu (under the *Options, System Message, Authorizations* menu), a YES/NO option has been added for **New Two Stage Configuration**. This flag determines which implementation of Two Stage alarm is used in the MXL.

- Select **NO** for the old system flag driven version of Two Stage
- Select **YES** for the new control function version of Two Stage

**NOTE:** When recompiling an older implementation of Two Stage Alarm under CSG-M 6.07 or higher, make certain that the New Two Stage Configuration flag is set to **NO** before compiling and uploading to the MXL.

## Two Stage Signal Circuit Output Definition

The output for all the coded audibles must be defined on a system basis. This is done in CSG-M from the *Options, System Message, Authorizations* menu. The *Zone Coded Audible Format* menu item determines the system's Two Stage audible definition. The following nine selections are provided for Two Stage audibles:

Two Stage Audible - 30/120 SPM
Two Stage Audible - 30SPM/Steady
Two Stage Audible - 30SPM/Temporal
Two Stage Audible - Steady/Steady
Two Stage Audible - Steady/120 SPM
Two Stage Audible - Steady/Temporal
Two Stage Audible - Zone Coded/Steady
Two Stage Audible - Zone Coded/120 SPM
Two Stage Audible - Zone Coded/Temporal

Note that each selection contains a slash (/) which separates the Stage 1 audible signal from the Stage 2 audible signal as shown in the following example.

***Example:***

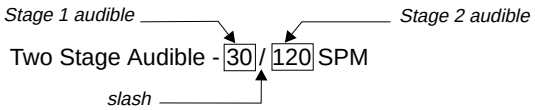


When zone coding is selected for Stage 1, the system displays the *Zone Coding Characteristics* menu. (See Figure on the next page.) This menu allows the system designer to program the number of rounds, minimum number of rounds, etc. **The final state will always be STEADY no matter what is selected in this menu.**

- Zone codes must be entered on a point by point basis.
- Zone codes will be output first by priority, second by queue order.
- In order to have the codes sound in the queue order only, all priorities must be the same.

## Two Stage Control Function (CSG-M)

The addition to the MXL that provides increased flexibility is the Two Stage Control Function. This function has two inputs and an output list.

The inputs are labeled **Stage 1** and **Stage 2.** The inputs may contain the following items:

- a device address
- function output (logic, timer, etc.)
- system flag reference



Technical Manuals Online! - http://www.tech-man.com

```
                         Fire Protection Company Name
CSG-M Memory=2900 used, 316874 free                        CONFIG => TWOSTG
                    Options, System Message, Authorizations

      System Message -----------------> ----- CERBERUS Pyrotronics -----
      Authorization Code-Level 1 -----> 11111
      Authorization Code-Level 2 -----> 22222
      Authorization Code-Level 3 -----> 33333
      COUNTRY where installed --------> Canada
      Language Selection -------------> ENGLISH and FRENCH
      NFPA System Designation --------> NFPA A System
      Backup Power Type --------------> 15 Amp Hour
      Zone Coded Audible Format ------> TWO STAGE AUDIBLE - ZONE CODED/STEADY
      Function Evaluation Limit ------> 32
      Photo Detector Confirmation ----> 0
      Ion Detector Confirmation ------> 0
      Sys. Justified Alarm Time ------> 60
      Intelligent Env. Compensation --> OFF

      VDT Password Time Out (hh:mm) --> 00:05

                          Zone Coding Characteristics

          Move Cursor to Highlight Selection, then ENTER   ESC=Prev. Menu
```

```
                         Fire Protection Company Name
CSG-M Memory=2900 used, 316874 free                        CONFIG => TWOSTG
                          Zone Coding Characteristics

    # rounds (3-15) ----------------> 5
    Tempo --------------------------> 60/MIN
    Final output status ------------> AUDIBLES ON
    Inter-digit time (0.5-15 secs) -> 1.0
    Inter-round time (0.5-15 secs) -> 2.0
    Inter-group time (0.5-15 secs) -> 4.0
    Minimum # round (3-15) ---------> 3
    Zone Code Alarms After Silence -> YES

        Move Cursor to Highlight Selection, then ENTER   ESC=Prev. Menu
```

**Selecting the Zone Coding Characteristics Menu**



Technical Manuals Online! - http://www.tech-man.com

The output may only be a list of CSM-4 or main board signal circuits. The signal circuits referenced **must be** zone coded audibles.

The following table describes how the Two Stage Control Function works.

**TWO STAGE CONTROL FUNCTIONS**

| Stage 1 Input | Stage 2 Input | Coded Audibles in Ouput List |
|---|---|---|
| False | False | Silent |
| True | False | Stage 1 Audible Signal *For example: 30 SPM, steady or zone coding* |
| False | True | Stage 2 Audible Signal *For example: 120 SPM, steady or temporal* |
| True | True | Stage 2 Audible Signal *For example: 120 SPM, steady or temporal* |

Multiple Two Stage control functions may be used in a configuration. A single coded audible may appear on the output list of more than one Two Stage control function. Due to the potential conflict between the functions controlling the same coded output, the following rule applies to the Two Stage control function:

- When a coded audible appears on the output list of more than one Two Stage control function and there is a conflict (that is, some functions indicate Stage 1 and some functions indicate Stage 2), then Stage 2 has priority over Stage 1. As a result, the coded audibles in question will output Stage 2 (either 120 SPM, steady, or temporal, as selected).

**NOTE:** When zone coding is selected as the Stage 1 audible output, Stage 2 always has priority over the Stage 1 coding. Once the coded circuit is driven into Stage 2 by logic, all zone codes will stop for that circuit no matter what the minimum rounds are.

**NOTE:** When an MXLV is used in place of CSM-4 signaling circuits, the Two Stage control function is not used. In the MXLV situation, the same concepts apply to a speaker function that would apply to the Two Stage control function.

## Two Stage System Flags

There are two system flags associated with Two Stage alarm: **Reset Inhibit** and **Two Stage Audible State.** Both of these flags are writable with user-designed logic. Refer to the following table for Setting the Two Stage System Flags.

**SETTING THE TWO STAGE SYSTEM FLAGS**

| When the Reset Inhibit flag is held:* | Then the Normal Reset (Red MMB key) is: |
|---|---|
| True | Inhibited |
| False | Not Inhibited |
| *The default value of Reset Inhibit is FALSE if the system does not require a Reset Inhibit. | |
| **If the Two Stage Audible State flag is held:**** | **Then the Normal Audible Silence (Red MKB key) is:** |
| False | Inhibited |
| True | Not Inhibited |
| **The default value of Two Stage Audible State is TRUE if the system does not require a Two Stage Audible State Inhibit. | |



Technical Manuals Online! - http://www.tech-man.com

It is important to note that other Two Stage writable flags used in the previous Two Stage implementation are not used in the new Two Stage implementation.

## Keyswitch Devices

There are two keyswitch types available in the MXL. All logic associated with a keyswitch device is CSG-M programmable. The only MXL defined aspects of a keyswitch are as follows:

### Keyswitch Type 1

1. If a Type 1 keyswitch is activated, an alarm event will result.
2. The event will be recorded on the alarm queue and all standard MXL functions associated with an alarm will occur (that is, the ANY ALARM flag will be set to TRUE, the ANY NEW ALARM flag will pulse, etc.).
3. This is true even if there are no previous alarms.

### Keyswitch Type 2

1. If a Type 2 keyswitch is activated when no alarms are present in the system, it will result in a trouble condition at the MXL.
2. If an alarm is detected while this trouble condition is present on the trouble queue, the active Type 2 keyswitch will be added to the system as an alarm event (added to alarm queue).
3. If the keyswitch is activated when an alarm is present in the system, the keyswitch will be treated as an alarm.

All other system behavior is determined by output logic design.

## Sample Two Stage Systems

### Using Reset Inhibit with Timer

This figure (see page M-6) shows methods of implementing Reset Inhibit with a timer, creating an ANY KEYSWITCH function/flag and a timer based signal silence inhibit function.

Keep in mind that your implementation of these features may vary from the examples shown. If Reset Inhibit or Two Stage Audible Silence are not required in your system, then references to these flags are not required in the logic design.

### Basic Two Stage System

This figure (see page M-7) demonstrates a basic Two Stage system design. Its operation is summarized below:

- This system will output Stage 1 audibles when the first alarm occurs.
- If the alarm is not acknowledged prior to the expiration of *stg1_timer*, coded audibles will be forced output Stage 2 audibles.
- If the alarm is acknowledged during Stage 1, only a keyswitch will place the system in the second stage.
- If the system is reset after the alarm has been acknowledged and coded audibles silenced, the system may be reset (provided the RESET INHIBIT logic permits).
- If a keyswitch is activated after the ANY_ALARM flag is TRUE, the system will output the second stage audibles.



Technical Manuals Online! - http://www.tech-man.com

- In either stage, the audible silence flag/key controls the silencing and unsilencing of the coded audibles.
- The Panel Reset flag is used to assure timers and latches are reset for the next event after reset.

**Complex Two Stage System**

This figure (see page M-8) demonstrates a more complex Two Stage system. The basic principles of operation are the same as the basic Two Stage system with a slight variation.

In this example, several Two Stage control functions are used in the system design. Together with the proper glue logic, a modified Two Stage system is the result. In this system, the floors above and below the alarm signal Stage 1 coded audibles while the floor of alarm codes Stage 2 audibles.

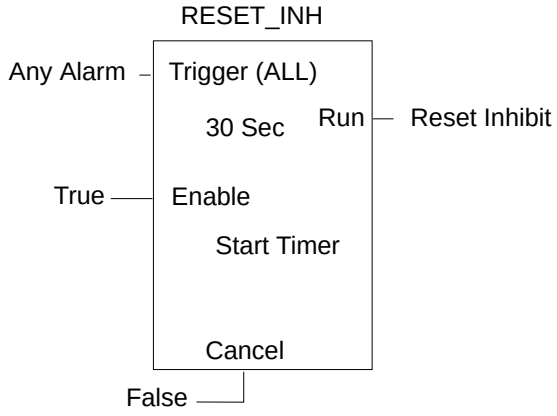


**Typical RESET INHIBIT Timer Function**

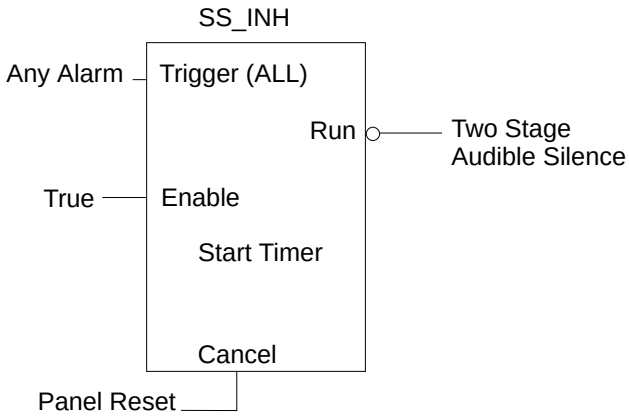


**Typical Signal Silence Inhibit Function**

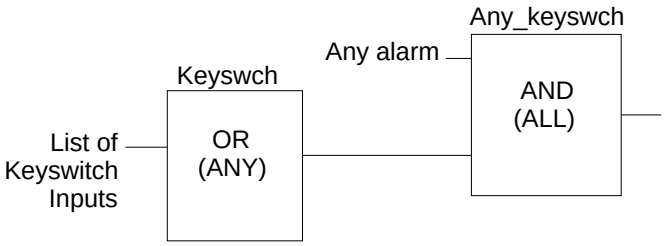


**Typical ANY KEYSWITCH Function**

## Using Reset Inhibit with Timer



Technical Manuals Online! - http://www.tech-man.com

The general differences between the basic and complex systems are as follows:

- The first alarm will result in Stage 1 coding on that floor.
- An activation of a keyswitch will place the system in second stage. Therefore, the floors above and below the alarm will code Stage 1; Stage 2 will code on the floor of alarm.
- If an adjacent floor generates an alarm, that floor will code Stage 2.

This same principle may be applied to networked MXLs using external references.

**For example:** The building in alarm codes Stage 2 while the adjacent buildings code Stage 1.

Visual indications are made using MOD-16 outputs or LED functions to VSM LEDs. Simply connect the signal in the logic diagram to the desired LED or other function to indicate the system stage.

**For example:** Connect Stage 1 and Stage 2 inputs to an LED function to indicate the system state.

**NOTE**: Since other audibles may be present in the system besides coded (Two Stage) audibles, the AUDIBLE SILENCE LED on the MKB will indicate the state of the AUDIBLE SILENCE flag as usual. Its state will only change with manual intervention (manual silence/ unsilence).

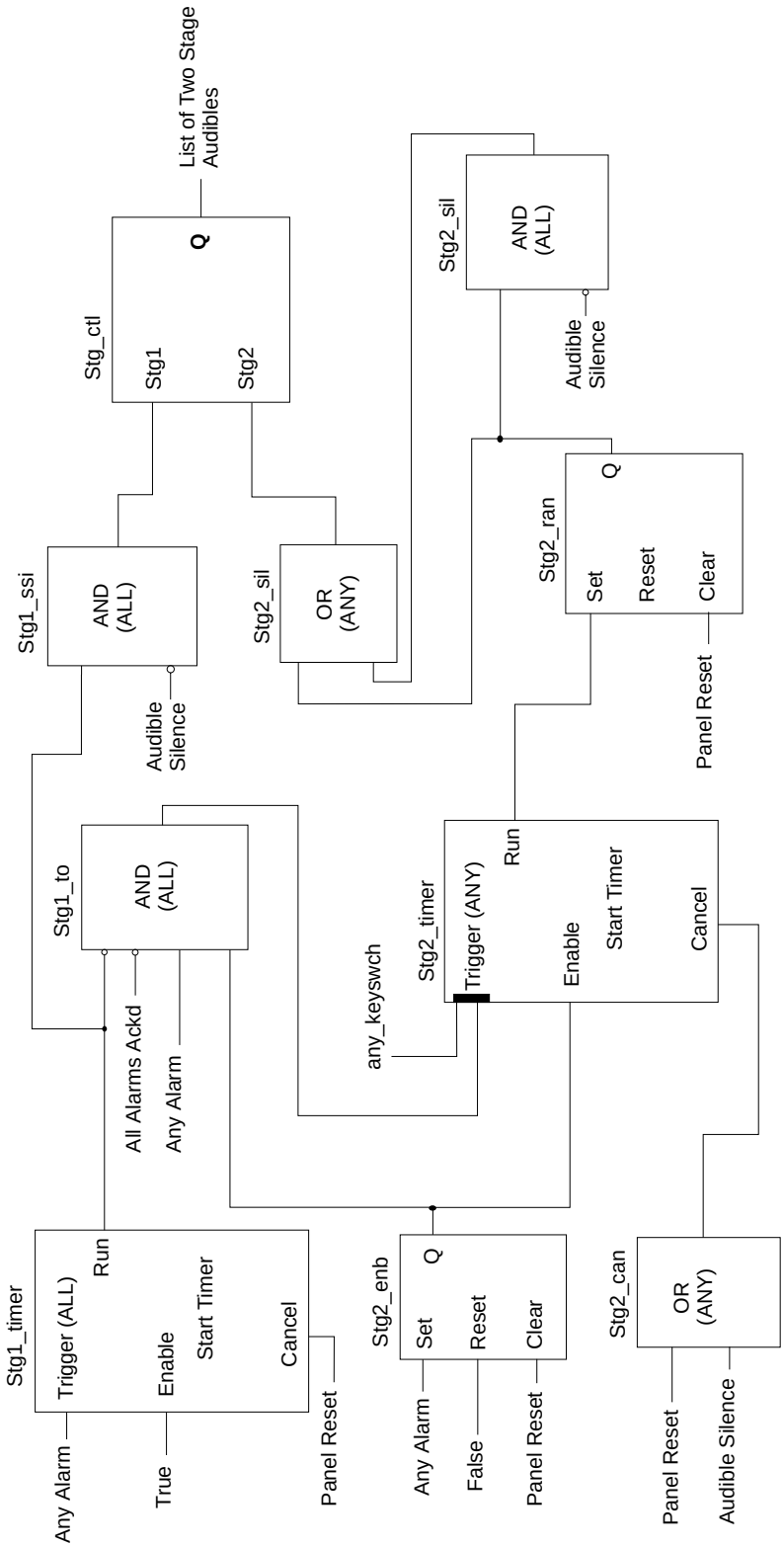


**Basic Two Stage System**



Technical Manuals Online! - http://www.tech-man.com

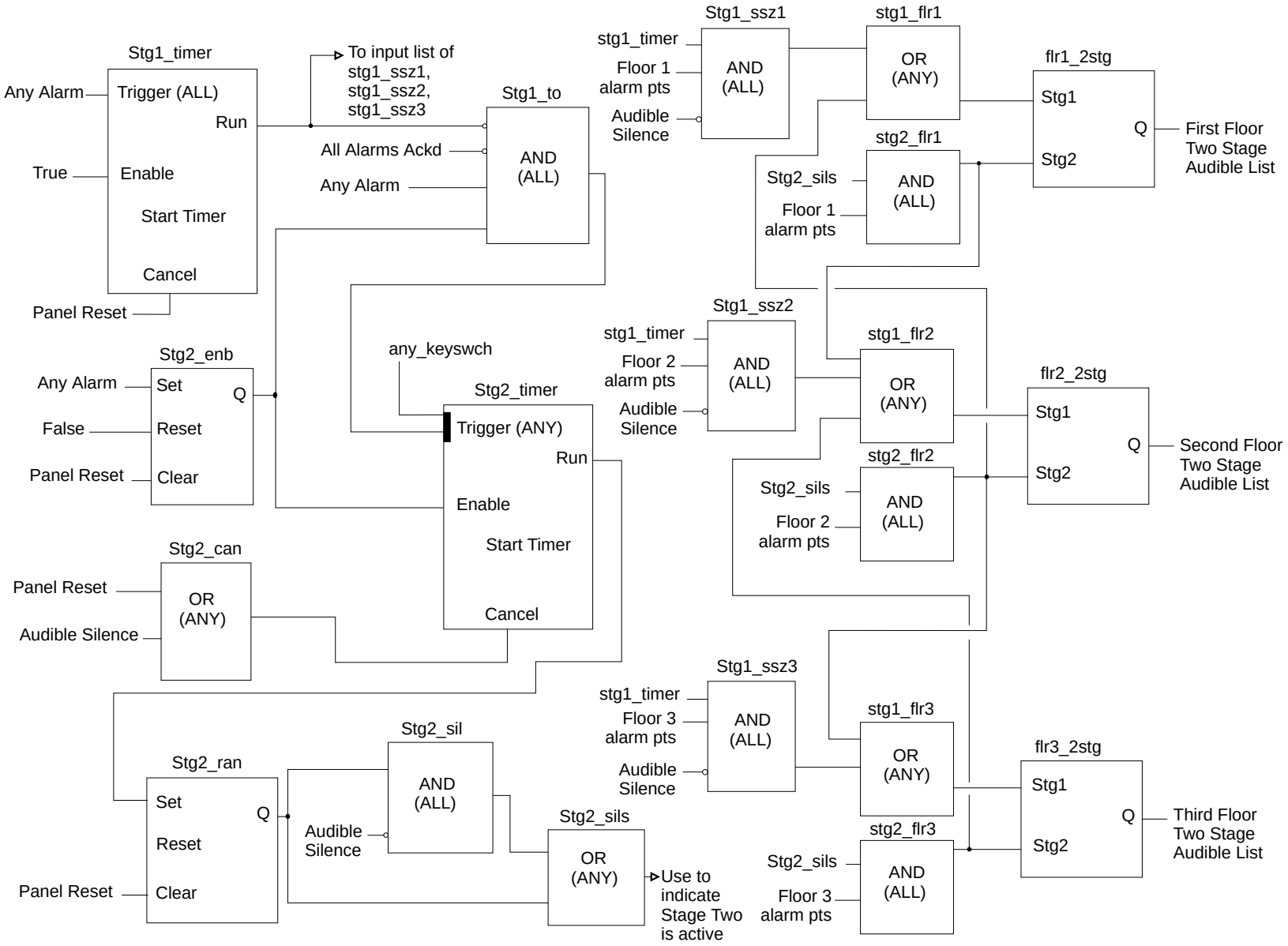


## Complex Two Stage System



Technical Manuals Online! - http://www.tech-man.com

# Glossary

**Analog Loop**
A signalling line circuit connected to analog addressable devices. These devices report individually to the control panel and can be interrogated for information such as obscuration level, device type, device sensitivity, etc. See **Appendix A - Compatible Devices**.

**Conventional Zone**
A circuit to which automatic or manual initiating devices are connected where the signal received does not identify the individual device operated. See **Appendix A - Compatible Devices**.

**CSG-M / Custom Software Generator - MXL**
A PC-based programming tool used to create and load the custom database for an MXL system.

**CXL**
A data consolidation system used to monitor and control up to 28 MXL or XL3 fire alarm panels at a single location.

**FSI / Foreign System Interface**
A network interface module that emits a protocol that allows third party systems to monitor the status of the MXL.

**IEC / Intelligent Environmental Compensation (Envirolink)**
An optional feature that permits MXL to compensate automatically for environmental changes (such as dirt and dust buildup) in the analog voltage of an I Series photo or ion smoke detector.

**MNET**
A modified RS485 network used within an MXL system to allow remote equipment to communicate with the MMB.

**NCC / Network Command Center**
A PC-based graphical user interface capable of monitoring and controlling up to 63 MXL systems. The NCC accomplishes this via the MXL system's network, XNET.



Technical Manuals Online! - http://www.tech-man.com

**NFPA 12A, 13, and 2001**
These are the standards of the NFPA fire code that relate to releasing service, such as sprinklers, FM-200, etc.

**NFPA 72 Local System (Protected Premises Fire Alarm System)**
A protected premises system that automatically sounds an evacuation alarm at the protected premises as the result of the manual operation of a fire alarm box or the operation of protection equipment or systems, such as water flowing in a sprinkler system, the discharge of carbon dioxide, the detection of smoke, or the detection of heat.

**NFPA 72 Proprietary (Proprietary Supervising Station Fire Alarm System)**
An installation of fire alarm systems that serves contiguous and noncontiguous properties, under one ownership, from a proprietary supervising station located at the protected property, at which trained, competent personnel are in constant attendance. This includes the proprietary supervising station; power supplies; signal-initiating devices; initiating device circuits; signal notification appliances; equipment for the automatic, permanent visual recording of signals; and equipment for initiating the operation of emergency building control services.

**Pseudo Point**
The pseudo point (and module) is a concept that was added to the MXL in order to increase system flexibility in both networked and non-networked systems. As the name pseudo suggests, these are virtual devices (not physical) in the system.

These points allow the system programmer to create events in the system (alarms, supervisories, troubles, etc.) based on criteria other than the state change of a real device and are intended to allow the system to generate events that result in information being recorded to an event queue (and therefore are recorded to a printer or other device).

For example, a programmer might insert one of these virtual points on the output of a logic function in a networked system when a remote node has a need to know about the state change of that function. When the function changes state, so will the pseudo point. This results in a local event being generated in the alarm queue at the pseudo point's address (assuming an alarm usage has been selected). In addition to the local event, the event will be transmitted across XNET to other nodes. These nodes can use this alarm as it would an alarm from any other alarm causing point.

Although introduced for networked systems (XNET), pseudo points can be applied in variety of MXL installations.


Technical Manuals Online! - http://www.tech-man.com

**RS-232**
A specification that details the electrical interface between two pieces of equipment. It does not control protocols—it only specifies the electrical signal levels and handshaking signals. Typical signal levels are ±12V and maximum cable lengths can be up to 50 feet.

**RS-485 Network**
A specification that details the electrical interface between two pieces of equipment. It does not control protocols—it only specifies the electrical signal levels and handshaking signals. Typical signal levels are ±5V and maximum cable lengths can be up to 5000 feet.

**UL 1076 System**
The section of the UL standard that covers the operation of security systems.

**XL3**
This is the original analog addressable fire alarm control panel. The MXL is based on innovations to the technology developed for this system.

**XNET**
An RS485 network used between MXL systems to allow peer to peer communication between MXL systems.



Technical Manuals Online! - http://www.tech-man.com

Technical Manuals Online! - http://www.tech-man.com

# Index

## A


Acknowledge menu. *See* Menu: Acknowledge
ACM-1
- connections and ratings, 4 - 1 to 4 - 2
- description, 1 - 21. *See also* MMM-1; TMM-1; VFM-1, VLM-1, VSM-1
- installation, 2 - 14 to 2 - 15
- networked voice, 3 - 24

addresses, 3 - 2 to 3 - 3, 3 - 26
- fixed module addresses, 3 - 3

alarm verification, E - 1 to E - 2
ALD-2I
- connections and ratings, 4 - 3
- description, 1 - 11
- installation, 2 - 25
- switch settings, 2 - 25

ALL buttons, using. *See* System operation, voice: ALL buttons
analog addressable devices, 1 - 33 to 1 - 36
analog loops
- MOM-4 expansion, 1 - 1. *See also* MOM-4
- PSR-1 expansion, 1 - 1. *See also* PSR-1

ANN-1
- installation, 2 - 13
- switch settings, 2 - 13

application specific detection, I - 1 to I - 2
ASC-1
- connections and ratings, 4 - 5 to 4 - 6
- description, 1 - 26
- installation, 2 - 32
- switch settings, 2 - 32
- user key placement, 2 - 33

ASC-2
- connections and ratings, 4 - 7 to 4 - 9
- description, 1 - 26
- installation, 2 - 33 to 2 - 35
- switch settings, 2 - 33 to 2 - 34
- user key placement, 2 - 34, 2 - 35

ASD. *See* application specific detection
audibles. *See* System operation, voice: audibles
audibles, silencing. *See* System operation, voice: silencing audibles
AUDIO PREVIEWING. *See* System operation, voice: utility functions


## B


Battery Calculations, C - 1
BP-61 batteries
- description, 1 - 8

BTC-1
- description, 1 - 27. *See also* ACM-1; OCC-1
- installation on ACM-1, 2 - 15 to 2 - 16
- installation on OCC-1, 2 - 36 to 2 - 37
- switch settings, 2 - 15, 2 - 36

BTX batteries
- description, 1 - 8


## C


Canadian two stage alarm, M - 1 to M - 8
CLEAR MANUAL. *See* System operation, voice: utility functions
CMI-300
- connections and ratings, 4 - 11 to 4 - 12
- description, 1 - 11
- installation, 2 - 26
- jumper settings, 2 - 26
- switch settings, 2 - 26

compatible devices, A - 1
Control Menu. *See* Menu: Control
conventional detectors, 1 - 37 to 1 - 38
CRM-4
- connections and ratings, 4 - 13
- description, 1 - 10
- installation, 2 - 24
- switch settings, 2 - 24




Technical Manuals Online! - http://www.tech-man.com

CSM-4
connections and ratings
NFPA 12A, NFPA 13 and NFPA 2001, 4 - 17
NFPA 72 Local, 4 - 15
NFPA 72 Municipal Tie, 4 - 16
NFPA 72 Remote Station, 4 - 16
description, 1 - 10
installation, 2 - 22 to 2 - 24
jumper settings, 2 - 22 to 2 - 23
switch settings, 2 - 22 to 2 - 24
CZM-1B6
connections and ratings, 4 - 19 to 4 - 22
analog loops, 4 - 20
initiating devices, 4 - 19
power, 4 - 21
description, 1 - 17
CZM-4
connections and ratings, 4 - 23
description, 1 - 10
installation, 2 - 25
switch settings, 2 - 25

# D

D2300CP
connections and ratings, 4 - 25 to 4 - 27
description, 1 - 18
detectors, conventional
ionization
DI-3, 1 - 37
DI-3H, 1 - 37
DI-A3, 1 - 37
DI-A3H, 1 - 37
DI-B3, 1 - 37
DI-B3H, 1 - 37
linear beam
PBA-1191, 1 - 38
photoelectric
PE-11, 1 - 38
PE-11T, 1 - 38
PE-3, 1 - 37
PE-3T, 1 - 38
thermal
DT-11, 1 - 37
detectors, intelligent
ionization
ID-60I, 1 - 33, 1 - 34
ID-60IA, 1 - 33
ID-60IB, 1 - 34
ID-60IBH, 1 - 34
ID-60IH, 1 - 33
ILI-1, 1 - 34
ILI-1A, 1 - 35
ILI-1AH, 1 - 35
ILI-1B, 1 - 35
ILI-1BH, 1 - 35
ILI-1H, 1 - 34
photoelectric
FP-11, 1 - 33
ID-60P, 1 - 33
ID-60PT, 1 - 33
ILP-1, 1 - 34
ILP-2, 1 - 35
ILPT-1, 1 - 34
thermal
FPT-11, 1-33
ID-60T-135, 1 - 34
ILT-1, 1 - 35
device address. *See* addresses
device analog voltages, B - 1
DIP switch. *See* switches
DISPLAY AUTOMATIC. *See* System operation, voice: utility functions
DISPLAY OFF. *See* System operation, voice: utility functions
DMC-1
connections and ratings, 4 - 29 to 4 - 30
description, 1 - 29
installation, 2 - 37
jumper settings, 2 - 37
switch settings, 2 - 37
user key placement, 2 - 38

# E

Envirolink, F - 1 to F - 3
EXT SOURCE. *See* System operation, voice: utility functions

# F

FP Series of detectors, 1 - 33
front door
filler plates, 2 - 2
installation, 2 - 2



Technical Manuals Online! - http://www.tech-man.com

## H

History Log. *See* Menu: Test: Event_Log
HOLD key, 3 - 2. *See also* MKB-2: Local Operation: display keys

## I

ICP-B6
connections and ratings, 4 - 31 to 4 - 38
25V speaker zone, 4 - 37
70V speaker zone, 4 - 34
analog loop, 4 - 31
NAC module, 4 - 32
telephone zone, 4 - 34
description, 1 - 32
ID Series of detectors, 1 - 33 to 1 - 34
IEC. *See* Envirolink
ILI Series of detectors, 1 - 34 to 1 - 35
ILP Series of detectors, 1 - 34, 1 - 35
installing system modules
general instructions, 2 - 4
interface modules, intelligent
TRI-60, TRI-60R, TRI-60D, 1 - 36
TRI-B6, TRI-B6R, TRI-B6D, 1 - 36
TRI-S, TRI-R, TRI-D, 1 - 36

## L

latching/non-latching troubles, G - 1
LIM-1, Loop Isolator Module
description, 1 - 38
List menu. *See* Menu: List

## M

Manual Station, Intelligent
MS-MI, 1 - 36
MSI-10/20, 1 - 35
MSI-10B/20B, 1 - 35
MSI-MB6, 1 - 36
MSI-B6F, 1 - 35
MBR-MP / MBR-3MP
installation, 2 - 4, 2 - 12
Menu. *See also* MKB-2: local operation
Acknowledge, 3 - 27 to 3 - 32
Alarm, 3 - 27
Security, 3 - 31 to 3 - 32
Supervsry, 3 - 30
Trouble, 3 - 31
Control, 3 - 45 to 3 - 49
Arm/dis, 3 - 46
Change_Apps, 3 - 49
Loop_arm, 3 - 47
Loop_disarm, 3 - 47
Net_link_Request, 3 - 48
Output_on/off, 3 - 46 to 3 - 47
Percent/ft, 3 - 48
Percent/ft - Pre-alarm, 3 - 48 to 3 - 49
Percent/ft - Senstvty, 3 - 48
Reset, 3 - 45
Senstvty, 3 - 45 to 3 - 46
entering a device number, 3 - 27
entering a module number, 3 - 26 to 3 - 27
entering your password, 3 - 25 to 3 - 26
general instructions, 3 - 25
List, 3 - 32 to 3 - 45
Alarm, 3 - 33 to 3 - 34
ASD_apps, 3 - 44
Dev_type, 3 - 40
Dev_usages, 3 - 42 to 3 - 43
Disarmed_state, 3 - 44 to 3 - 45
Message, 3 - 40 to 3 - 41
Mod_type, 3 - 39 to 3 - 40
Node_address, 3 - 43
Output_states, 3 - 42
Percent/ft - Analog, 3 - 43 to 3 - 44
Percent/ft - Pre-alarm, 3 - 43
Percent/ft - Senstvty, 3 - 43
Security, 3 - 35
Senstvty, 3 - 36
Status, 3 - 33
Supervsry, 3 - 34
SW_Version, 3 - 41
Temp, 3 - 39
Trouble, 3 - 34 to 3 - 35
Voltages, 3 - 36 to 3 - 37
Voltages - Analog, 3 - 37
Voltages - Calib, 3 - 37
Voltages - ID, 3 - 37
Voltages - ID2, 3 - 37 to 3 - 39
Voltages - Sens, 3 - 37
Voltages - Thresh, 3 - 37



Technical Manuals Online! - http://www.tech-man.com

Menu (cont'd)
Test, 3 - 49 to 3 - 62
ACM_Lamptest, 3 - 53 to 3 - 54
ASD_Devices, 3 - 60
Det_cleaned, 3 - 55
Device_LED, 3 - 53
Event_Log, 3 - 55 to 3 - 56
Event Log - Hist_Ctrl and Hist_Erase, 3 - 56 to 3 - 59
Gnd_flt, 3 - 50
Gnd_flt - Main, 3 - 50
Gnd_flt - Remote, 3 - 50 to 3 - 51
M_Network, 3 - 54
Manual_Activate, 3 - 61 to 3 - 62
Manual_Activate - Test, 3 - 62
MKB1_Lamptest, 3 - 52
MKB1_Lamptest - Display, 3 - 52
MKB1_Lamptest - LEDs, 3 - 52
MOI-Lamp_Test, 3 - 53
NET7_Diags, 3 - 54
Override, 3 - 54
Override - Alr_Confirm, 3 - 55
Override - Alr_Verify, 3 - 54
PAX_Lamptest, 3 - 53
Power, 3 - 51
Power - Main, 3 - 51
Power - Main - Current, 3 - 51
Power - Main - Voltage, 3 - 51
Power - Remote, 3 - 51
Power - Remote - Current, 3 - 52
Power - Remote - Options, 3 - 52
Power - Remote - Voltage, 3 - 51 to 3 - 52
Pre-alarm, 3 - 59 to 3 - 60
Pyro_Diags, 3 - 59
Set_time, 3 - 50
Summarize, 3 - 60 to 3 - 62
Summarize - OFF, 3 - 61
Summarize - ON, 3 - 61
Summarize - Select_Mods, 3 - 60 to 3 - 61
X_Network, 3 - 54
Walktest, 3 - 62 to 3 - 67
ending sequence, 3 - 67
Loop_SIL, 3 - 64 to 3 - 66
Loop_wAUD, 3 - 64 to 3 - 66
suggested procedure, 3 - 62
System_SIL, 3 - 63 to 3 - 64
System_wAUD, 3 - 63 to 3 - 64
Zone_SIL, 3 - 66 to 3 - 67
Zone_wAUD, 3 - 66 to 3 - 67
MHD Panels
description, 2 - 17
installation, 2 - 18
microphone, using the. *See* System operation, voice: microphone
MID-16
connections and ratings, 4 - 50
description, 1 - 16. *See also* MOI-7
MKB-2
ACM-1, 2 - 14
ANN-1, 2 - 13
BTC-1, 2 - 15 to 2 - 16
description, 1 - 6
global operation, 3 - 13 to 3 - 15
display format, 3 - 13
keypad, 3 - 14 to 3 - 15
limitations and restrictions, 3 - 13
installation, 2 - 12 to 2 - 14
local operation, 3 - 1
CLEAR key, 3 - 4
command keypad, 3 - 3
display, 3 - 1 to 3 - 2
display keys, 3 - 2
internal audible, 3 - 4
numeric keypad, 3 - 3
PRINT key, 3 - 4
special (alt + function) keypad, 3 - 4
system control keypad, 3 - 2 to 3 - 3
system control LEDs, 3 - 2 to 3 - 3
MMM-1, 2 - 16
TMM-1, 2 - 17
MLE-6
description, 1 - 7
installation, 2 - 1 to 2 - 2
MMB-2
connections and ratings, 4 - 39 to 4 - 43
field wiring, 4 - 40 to 4 - 43
internal wiring, 4 - 39
description, 1 - 5
installation, 2 - 4
MME-3
description, 1 - 7
installation, 2 - 1 to 2 - 2
MMM-1
description, 1 - 22
installation, 2 - 16
MOD-16
connections and ratings, 4 - 49
description, 1 - 16. *See also* MOI-7



Technical Manuals Online! - http://www.tech-man.com

module address. *See* addresses
MOI-7
connections and ratings, 4 - 45 to 4 - 48
description. *See* MID-16; MOD-16
MOM-2
connections and ratings, 4 - 51 to 4 - 52
MOM-4
connections and ratings, 4 - 53 to 4 - 54
MOM-4 / MOM-2
card guides, 2 - 7
description, 1 - 9
installation, 2 - 7
installing plug-in modules, 2 - 20 to 2 - 22
MPS-6/-6W, MPS-12/-12W
description, 1 - 5
installation, 2 - 3 to 2 - 4
MXL Battery Calculations, C - 1 to C - 2
MXL Control Panel
basic components, 1 - 3
description, 1 - 1 to 1 - 3
minimum configuration, 1 - 3
table, 1 - 4
optional modules, 1 - 9 to 1 - 19
MXL Menu Structure, 3 - 28, 3 - 29
MXL Power Supply Load Calculations, D - 1 to D - 2
MXL software, 1 - 3
MXL trouble messages, K - 1 to K - 12
MXLV Control Panel
description, 1 - 20
optional modules, 1 - 20
system capacity, 1 - 20

# N

NET-4
connections and ratings, 4 - 80
description, 1 - 12. *See also* PSR-1
installation, 2 - 6
NET-7
connections and ratings, 4 - 80 to 4 - 81
description, 1 - 12
installation, 2 - 6 to 2 - 7, 2 - 29
jumper settings, 2 - 29
switch settings, 2 - 29
NET-7M
connections and ratings, 4 - 82
description, 1 - 13
installation, 2 - 7, 2 - 29
Network Address Programming Table, 2 - 48
NEXT key, 3 - 2. *See also* MKB-2: Local Operation: display keys
NIM-1R
connections and ratings, 4 - 55 to 4 - 58
AnaLASER interface, 4 - 58
foreign system interface (FSI), 4 - 57
network, 4 - 55 to 4 - 56
network command center (NCC), 4 - 56
description, 1 - 13
installation, 2 - 27 to 2 - 28
switch settings, 2 - 27

# O

OCC-1
connections and ratings, 4 - 59 to 4 - 60
description, 1 - 27
installation, 2 - 35 to 2 - 36
jumper settings, 2 - 35
networked voice, 3 - 24
switch settings, 2 - 35
user key placement, 2 - 35, 2 - 36
OMM-1
connections and ratings, 4 - 61 to 4 - 62
OMM-1 / OMM-2
card guides, 2 - 8
factory installed keys, 2 - 30, 2 - 31
user keys, 2 - 30
description, 1 - 24 to 1 - 25. *See also* ASC-1; ASC-2; DMC-1; OCC-1; PLC-4; RCM-1; ZAC-30; ZC Zone Control Card Modules
installation, 2 - 7
installing plug-in modules, 2 - 30 to 2 - 32
OMM-2
connections and ratings, 4 - 63 to 4 - 64

# P

paging, how to. *See* System operation, voice: page, phone and Warden's (remote)
PAL-1
connections and ratings, 4 - 67 to 4 - 69
description, 1 - 18
PE Series of detectors, 1 - 37 to 1 - 38
PIM-1
connections and ratings, 4 - 65
installation, 2 - 11
jumper setting, 2 - 11



Technical Manuals Online! - http://www.tech-man.com

PIM-2
connections and ratings, 4 - 67 to 4 - 69
description, 1 - 18
PL864 plug-on boards
description, 1 - 31 to 1 - 32. *See also* PLC-4
PLC-4
connections and ratings, 4 - 71 to 4 - 72
description, 1 - 31 to 1 - 32. *See also* PL864 plug-on boards
installation, 2 - 46 to 2 - 47
power limited wiring, L - 1
Power Supply Load Calculations, D - 1 to D - 2
PS-5A
connections and ratings, 4 - 73
description, 1 - 15. *See also* D2300CP; MOI-7
PS-5N7
connections and ratings, 4 - 75 to 4 - 77
description, 1 - 15. *See also* PIM-1
PSR-1
connections and ratings, 4 - 79 to 4 - 86
description, 1 - 14 to 1 - 15. *See also* MOD; MOI; MPS-6/6W, MPS-12/12W; NET-4; NET-7; NET-7M
installation, 2 - 5
installing NET-4 onto, 2 - 6
installing NET-7 onto, 2 - 6 to 2 - 7
installing NET-7M onto, 2 - 7
switch settings, 2 - 5

# R

RCC-1/1F
connections and ratings, 4 - 87
description, 1 - 7
RCM-1
connections and ratings, 4 - 89 to 4 - 102
description, 1 - 28
installation, 2 - 47
switch settings, 2 - 47
user key placement, 2 - 47
REP-1
connections and ratings, 4 - 103 to 4 - 104
description, 1 - 14. *See also* NIM-1R
installation, 2 - 28 to 2 - 29
jumper settings, 2 - 28 to 2 - 29
switch settings, 2 - 28
reset procedure
hard reset, 3 - 11
soft reset, 3 - 12

# S

security points, installing, H - 1
SEL buttons, using. *See* System operation, voice: SEL buttons
self restoring troubles. *See* latching/non-latching troubles
Silent Knight Model 5128/5129
connections and ratings, 4 - 105 to 4 - 106
description, 1 - 19
switches, 2 - 4
System operation, global, 3 - 13 to 3 - 15. *See also* MKB-2: global operation
System operation, local
alarm, 3 - 5 to 3 - 7
normal mode, 3 - 4 to 3 - 5. *See also* MKB-2: local operation
reset procedures, 3 - 11 to 3 - 12
security, 3 - 10 to 3 - 11
supervisory, 3 - 7 to 3 - 8
trouble, 3 - 8 to 3 - 10
System operation, networked voice, 3 - 24
VSM switch usages, 3 - 24
System operation, voice, 3 - 15 to 3 - 23. *See also* VSM/VLM/VFM/VSB
ALL buttons, 3 - 18
audibles, 3 - 18
automatic, 3 - 17
external source, selecting, 3 - 21
LED visual indicators, 3 - 17
manual, 3 - 17
microphone, 3 - 18 to 3 - 19
overview, 3 - 23
page, phone and Warden's (remote), 3 - 19
remote command stations, 3 - 20 to 3 - 21
SEL buttons, 3 - 18
silencing audibles, 3 - 19
sound, categories of, 3 - 15 to 3 - 16
alert, 3 - 16
evac, 3 - 16
other, 3 - 16
page, 3 - 16
standard tones, 3 - 16
telephone, 3 - 21
telephone call-ins, 3 - 19
utility functions, 3 - 20
VSM switch usages. *See also* System operation, voice: VSM switches by function
VSM switches by function, 3 - 17



Technical Manuals Online! - http://www.tech-man.com

## T

TBM-2
connections and ratings, 4 - 107 to 4 - 110
description, 1 - 24. *See also* ACM-1
installation, 2 - 12
telephone call-ins. *See* System operation, voice: telephone call-ins
telephone operation. *See* System operation, voice: telephone
Test Menu. *See* Menu: Test
testing procedures, J - 1
TMM-1
description, 1 - 22
installation, 2 - 17
trouble messages, K - 1 to K - 12
TSP-40
description, 1 - 7
installation, 2 - 8 to 2 - 9
paper roll, 2 - 10 to 2 - 11
TSW-2 Tamper Switch
description, 1 - 8
installation, 2 - 18
two stage alarm, Canadian, M - 1 to M - 8

## V

VFM-1
connections and ratings, 4 - 111 to 4 - 112
description, 1 - 23
VLM-1
connections and ratings, 4 - 111 to 4 - 112
description, 1 - 23
voice operation. *See* System operation, voice
VSB-1
description, 1 - 24
VSM switch usages. *See* System operation, voice: VSM switch usages
VSM-1
connections and ratings, 4 - 111 to 4 - 112
description, 1 - 22 to 1 - 23
VSM/VLM/VFM/VSB
installation, 2 - 18 to 2 - 20
switch settings, 2 - 19

## W

Walktest Menu. *See* Menu: Walktest

## X

XLD-1
connections and ratings, 4 - 113
description, 1 - 11
installation, 2 - 26
switch settings, 2 - 26

## Z

ZAC-30
connections and ratings, 4 - 115 to 4 - 120
description, 1 - 28 to 1 - 29
fuses, 2 - 44
installation, 2 - 43 to 2 - 46
jumper settings, 2 - 44 to 2 - 45
switch settings, 2 - 44
user key placement, 2 - 45, 2 - 46
ZC Zone Control Card Modules
description, 1 - 30
ZC1-8B
connections and ratings, 4 - 121 to 4 - 126
fuses, 2 - 38
installation, 2 - 38 to 2 - 39
switch settings, 2 - 38, 2 - 39
user key placement, 2 - 39
ZC2-4AB
connections and ratings, 4 - 127 to 4 - 130
fuses, 2 - 40
installation, 2 - 40 to 2 - 41
switch settings, 2 - 40
user key placement, 2 - 41
ZC2-8B
connections and ratings, 4 - 131 to 4 - 133
fuses, 2 - 39
installation, 2 - 39 to 2 - 40
switch settings, 2 - 39, 2 - 40
user key placement, 2 - 40
ZC3-4AB
connections and ratings, 4 - 135 to 4 - 138
fuses, 2 - 42
installation, 2 - 41 to 2 - 42
switch settings, 2 - 41
user key placement, 2 - 42
ZCT-8B
connections and ratings, 4 - 139 to 4 - 140
description, 1 - 31
installation, 2 - 42 to 2 - 43
switch settings, 2 - 42, 2 - 43
user key placement, 2 - 43



Technical Manuals Online! - http://www.tech-man.com

Technical Manuals Online! - http://www.tech-man.com

## WARNING:

This equipment generates, uses, and can radiate radio frequency energy and if not installed and used in accordance with the instructions manual, may cause interference to radio communications. It has been tested and found to comply with the limits for a Class A computing device pursuant to Part 15 of FCC Rules, which are designed to provide reasonable protection against such interference when operated in a commercial environment. Operation of this equipment in a residential area is likely to cause interference in which case the user at his own expense will be required to take whatever measures may be required to correct the interference.

Technical Manuals Online! - http://www.tech-man.com

Siemens Building Technologies, Inc.
8 Fernwood Road
Florham Park, New Jersey 07932

Siemens Building Technologies, Ltd.
50 East Pearce Street
Richmond Hill, Ontario  L4B 1B7 CN

P/N 315-092036CD-8

Technical Manuals Online! - http://www.tech-man.com

# CERBERUS PYROTRONICS™ Model MXL — CONNECTION DIAGRAM

**NOTES:**

1. For Installation Instructions for the MXL and MXLV modules refer to the Tables to the right below.
2. Waterflow Alarm must be CSG-M configured to at least one non-silenceable NAC.
3. Refer to the **MXL/MXLV OPERATION, INSTALLATION, AND MAINTENANCE MANUAL** (P/N 315-092036) for minimum NFPA configurations and additional information.
4. Use the following batteries: BTX-1, BTX-2, or BP-61.
5. The CSM-4 module is capable of the following functions:
   - Leased Line Circuit
   - Supervised Local Energy Auxiliary Trip (Municipal Tie)
   - Supervised Notification Appliance Circuit
   - Releasing Service (per NFPA 12, 12A, 13, and 2001)
6. CRM-4 relay coils are supervised when not energized; contacts are not.
7. For alternate configurations using CZM-1/1B6s, consult Technical Support.
8. Optional transient suppressors Model CP2341 and CP2297 may be used in addition to the transient protection incorporated in the panel and **not in lieu of that protection.** Use them for extreme lightning conditions. For CP2297 refer to instructions P/N 315-092355. For CP2341 refer to instructions P/N 315-092390.
9. For the Silent Knight 5128/5129 Central Station, Remote Station connection (NFPA 72), refer to instructions P/N 315-093294.
10. The modules indicated with an asterisk in the Tables to the right below are rated power limited on all terminals. Refer to the following MXL/MXLV Power Limited Wiring Instructions: MBR-2, P/N 315-092846; MSE-2, P/N 315-092403; MLE-6, P/N 315-094970; MME-3, P/N 315-094883; PLC-4, P/N 315-093312. The ZC and ASC-1/2 modules require the PLC-4 for power limited applications.
11. The following terminals on the PSR-1 (P/N 315-090911) are power limited: TB1 (1-6), TB4 (1-4), and TB3 (1-4).
12. When the CSM-4 is configured for Municipal Tie or Releasing Service, terminals 1 and 4 and/or terminals 9 and 12 are non-power limited. In all other applications, the CSM-4 is power limited on all terminals.
13. For a list of **Compatible Notification Appliances,** refer to P/N 315-096363.

**Electrical Ratings**
**(All ratings are per zone, per loop, or per circuit)**

| | Supervisory | Alarm | Line Impedance |
|---|---|---|---|
| **MMB-2 Analog Loop** | 30 VDC 66mA max | 30 VDC 66mA max | 100 ohms max with ID Series devices; 50 ohms max with IL/FP Series devices |
| **MMB-2 NAC Loop** | 24V unfiltered, FWR† 12mA max | 24V unfiltered, FWR† 1.5A max | 3 ohms max |
| **MMB-2 CZM-1/1B6 Power** | 24V unfiltered, FWR† 1A max | 24V unfiltered, FWR† 1A max | 4 ohms max* (10 CZM-1/1B6s max) |
| **ALD-2I** | 30 VDC 66mA max | 30 VDC 66mA max | 100 ohms max with ID Series devices; 50 ohms max with IL/FP Series devices |
| **CZM-4** | 20-24.5 VDC 4mA max | 24.5 VDC max 180mA max | 70 ohms max |
| **CZM-1/1B6** | 18-24.5 VDC 4mA max | 24.5 VDC max 45mA max | 35 ohms max |
| **CSM-4 NAC Loop** | 24V unfiltered, FWR† 12mA max | 24V unfiltered, FWR† 1.5mA max | 3 ohms max |
| **CSM-4 Municipal Tie** | 24V unfiltered, FWR† 12mA max | 24V unfiltered, FWR† 220-320mA (momentary) | 22.5 ohms max (including load) |
| **CSM-4 Leased Line** | 24V unfiltered, FWR† 3-9mA max | 24V unfiltered, FWR† 3-9mA max | 2.5K ohms (includes line and load) |
| **CSM-4 Releasing Service** | 24 VDC 12mA max | 24 VDC 800mA max | 3 ohms max |
| **XLD-1** | 28 VDC max 40mA max | 28 VDC 40mA max | 100 ohms |

*See Note 7 †FWR = Full Wave Rectified

**Compatible Initiating Devices for ALD-2I and MMB-2**

| Compatible Devices | Base | Installation Instructions |
|---|---|---|
| CZM-1 | — | 315-090725-8 |
| CZM-1B6 | — | 315-095355-2 |
| FP-11* | DB-11, DB-X11RS<br>DB-3S + DB-ADPT<br>DB-X3RS + DB-ADPT<br>ADBI-60 + DB-ADPT | 315-095921-4<br>315-095921-4<br>315-095921-4<br>315-095921-4 |
| FP-11*(d)† | AD-11P/11XPR | 315-095659-2 |
| FPT-11* | DB-11, DB-X11RS<br>DB-3S + DB-ADPT<br>DB-X3RS + DB-ADPT<br>ADBI-60 + DB-ADPT | 315-095921-4<br>315-095921-4<br>315-095921-4<br>315-095921-4 |
| ID-60I/IH/IA/IAH | DB-3S, DB-X3RS | 315-090287-2 |
| ID-60IB/IBH | AD-3I<br>AD-3XRI | 315-093234-4<br>315-093235-4 |
| ILI-1/1H/1A/1AH | DB-3S, DB-X3RS | 315-095387-1 |
| ILI-1B/1BH | AD-3I<br>AD-3XRI | 315-093234-4<br>315-093235-4 |
| ILP-1 | DB-3S, DB-X3RS | 315-092594-5 |
| ILP-1 (d) | AD-3ILP<br>AD-3XRILP | 315-093234-4<br>315-093235-4 |
| ILPT-1 | DB-3S, DB-X3RS | 315-092594-5 |
| ILP-2** | DB-3S, DB-X3RS | 315-095028-3 |
| ILP-2**(d)† | AD-3ILP<br>AD-3XRILP | 315-093234-4<br>315-093235-4 |
| ILT-1 | DB-3S, DB-X3RS | 315-093336-1 |
| MSI-10/-20 | — | 315-090903-3 |
| MSI-10B/-20B | — | 315-093329-3 |
| MSI-B6F | — | 315-095302-1 |
| MSI-MB6 | — | 315-093613-1 |
| TRI-B6/B6D/B6R | — | 315-093315-3 |
| TRI-B6M | — | 315-094547-1 |
| TRI-S/D/R | — | 315-096242-2 |

*The FP-11 is only compatible with MXL Rev. 10.0 or greater firmware.
**The ILP-2 is only compatible with MXL Rev 8.0 or greater firmware.
†When the CSG-M is configured, the DUCT application must be selected when the device is used in an air duct housing or in a spot duct application.

**Compatible Detectors for CZM-4**

| Detector | Base | Installation Instructions |
|---|---|---|
| DI-3/3H* | DB-3S | 315-081943-15 |
| DI-A3/A3H* | DB-3S | 315-081943-15 |
| DI-B3/B3H* | AD-3I/3ILP<br>AD-3RI/3RP | 315-093234-4<br>315-086591-7 |
| DT-11* | DB-11<br>DB-3S + DB-ADPT | 315-095429-1<br>315-095429-1 |
| PBA-1191** | PBB-1191 | 315-095424-2 |
| PE-3/3T* | DB-3S*<br>AD-3ILP<br>AD-3RP | 315-090875-6<br>315-093234-4<br>315-086591-7 |
| PE-11/11T* | DB-11<br>DB-3S + DB-ADPT<br>AD-11P/11PR | 315-094198-6<br>315-094198-6<br>315-095659-2 |

*May use up to 30 detectors of any type.
**Only one PBA-1191, and no additional devices, can be connected to a CZM-4 initiating zone.

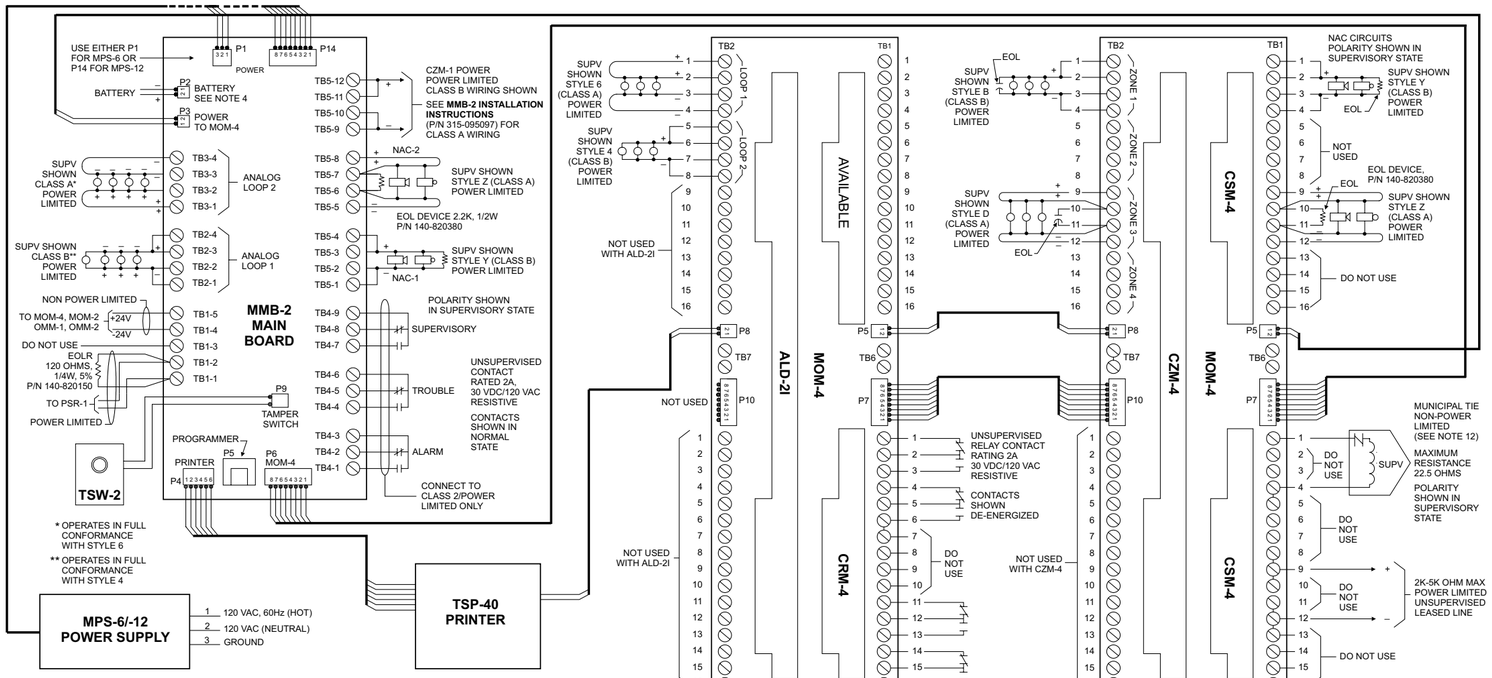


**For Proprietary Burglary Application (1076)** use a TSW-2 tamper switch to monitor the main enclosure. Monitor each TRI-60/60R/60D or TRI-B6/B6R/B6D related to this application (1076) for 24 hours by a listed motion detector to prevent tampering.

**Compatible Detectors for CZM-1/-1B6***

| Detector | Base | Installation Instructions |
|---|---|---|
| DI-3/3H | DB-3S | 315-081943-15 |
| DI-A3/A3H | DB-3S | 315-081943-15 |
| DI-B3/B3H | AD-3I/3ILP<br>AD-3RI/3RP | 315-093234-4<br>315-086591-7 |
| DT-11 | DB-11<br>DB-3S + DB-ADPT | 315-095429-1<br>315-095429-1 |
| PE-3/3T | DB-3S<br>AD-3ILP<br>AD-3RP | 315-090875-6<br>315-093234-4<br>315-086591-7 |
| PE-11/11T | DB-11<br>DB-3S + DB-ADPT<br>AD-11P | 315-094198-6<br>315-094198-6<br>315-095659-2 |

May use up to 15 detectors of any type.
*Do not use AD-11PR or detector-operated accessories with the CZM-1/-1B6.

| MXL Modules | Installation Instructions | MXL Modules | Installation Instructions |
|---|---|---|---|
| ALD-2I* | 315-091464-6 | MOM-2 | 315-092777-5 |
| CMI-300* | 315-091259-5 | MOM-4 | 315-090852-7 |
| CP2297 | 315-092355-2 | MPS-6 | 315-090334-4 |
| CP2341 | 315-092390-2 | MPS-12 | 315-092030-4 |
| CRM-4 | 315-090853C | MSE-2 | 315-092403-3 |
| CSM-4† | 315-090854-10 | NET-4* | 315-090909-2 |
| CZM-1* | 315-090725-8 | NET-7* | 315-091914-6 |
| CZM-1B6* | 315-095355-2 | NET-7M | 315-094531-1 |
| CZM-4* | 315-090726-7 | NIM-1R* | 315-092953-4 |
| ICP* | 315-092471-7 | PAL-1 | 315-092408-5 |
| ICP-B6* | 315-095306-3 | PIM-1* | 315-091462-10 |
| LIM-1* | 315-092135-5 | PIM-2 | 315-092408-5 |
| MEM-1 | 315-093943-2 | PS-5A | 315-092367-4 |
| MID-16 | 315-091860-2 | PS-5N7* | 315-092729-7 |
| MKB-2 | 315-092087-2 | PSR-1 | 315-090911-13 |
| MLE-6 | 315-094970-1 | RCC-1/1F | 315-095364-2 |
| MME-3 | 315-094883-2 | TSP-40 | 315-090776-4 |
| MOD-16 | 315-090830-4 | TSW-2 | 315-092433-2 |
| MOI-1* | 315-090829-4 | XLD-1* | 315-093385-3 |
| MOI-7* | 315-092799-2 | †See Note 12 | |

| MXLV Modules | Installation Instructions |
|---|---|
| ACM-1 | 315-092083-4 |
| ASC-1* | 315-091263-3 |
| ASC-2* | 315-092085-5 |
| BTC-1 | 315-090919-3 |
| DMC-1 | 315-092692-2 |
| EL-410D | 315-094916-2 |
| MMM-1 | 315-092098-1 |
| OCC-1* | 315-090918-5 |
| OMM-1 | 315-090267-5 |
| OMM-2 | 315-092699-3 |
| PLC-4 | 315-093312-2 |
| RCM-1 | 315-093878-6 |
| TBM-2* | 315-093782-2 |
| TMM-1 | 315-092099-2 |
| VFM-1 | 315-092064-4 |
| VLM-1/VSM-1 | 315-092064-4 |
| ZAC-30* | 315-092960-3 |
| ZC1-8B* | 315-090910-8 |
| ZC2-8B* | 315-092116-8 |
| ZC2-4AB* | 315-091262-7 |
| ZC3-4AB* | 315-092089-7 |
| ZCT-8B* | 315-092105-2 |


Siemens Building Technologies, Inc.
8 Fernwood Road
Florham Park, New Jersey 07932

Siemens Building Technologies, Ltd.
50 East Pearce Street
Richmond Hill, Ontario L4B 1B7 CN


P/N 575-296142CD-4

Technical Manuals Online! - http://www.tech-man.com